JELPC®

Ningbo Jiaerling Pneumatic Machinery Co.,Ltd.
Add:No.1 Xingjia Road Da'ao Industrial Zone, Xikou,Ningbo.China
Tel: +86-574-888 698 17 888 698 16
Fax: +86-574-888 667 77
E-mail:jelpc@jelpc.com
Http://www.jelpc.com

Official website WeChat public No.

Due to our policy of continuous development, JELPC reserve the right to change specifications without prior notice.

JEL18-02C

JELPC® PNEUMATIC

JEL18-02C

JELPC®

JIAERLING PNEUMATIC
--China Pneumatic

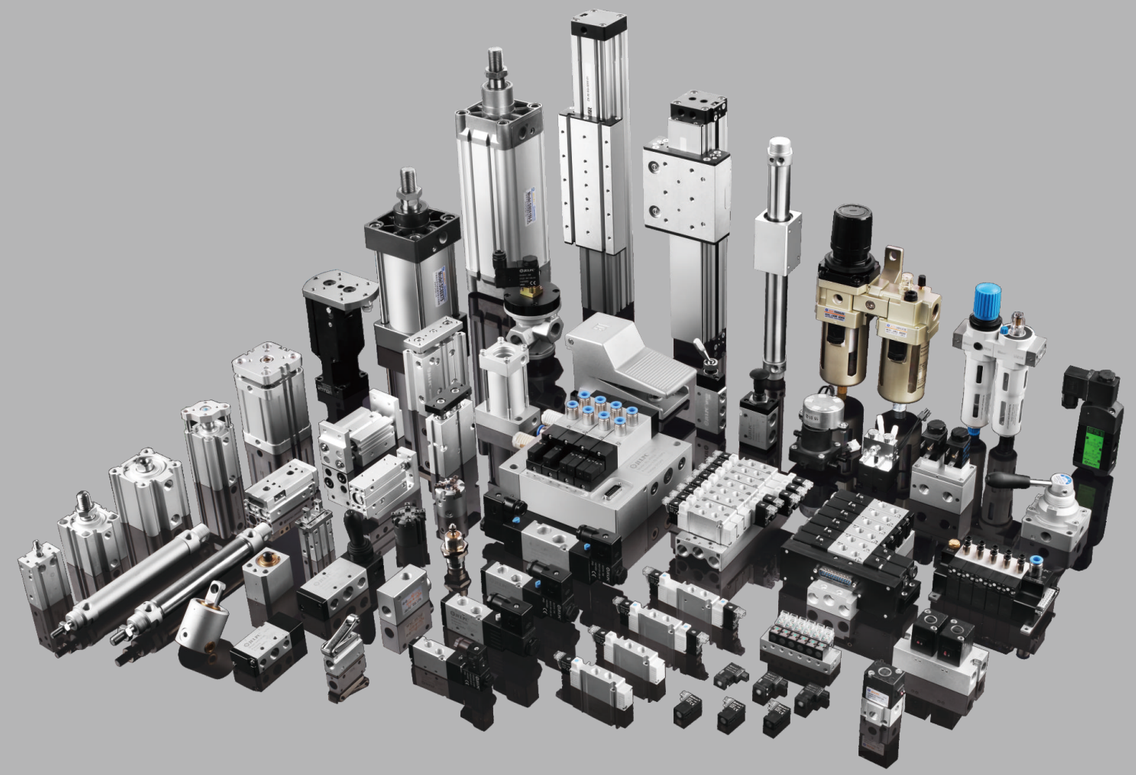

We make the difference

Catalogue
2018

JELPC®

JELPC- China Pneumatics

2008

Supplier of solenoid valve of drainage system for the usage of Beijing Olympic Games Bird's Nest and Water Cube.

2010

Supporting designated supplier of Shanghai World Expo environmental protection recycling system.

Before

For years our company has helped the construction of China's rail transit and has been technical support for high-speed rail and electrical engineering and the supporting unit of high-end products.

Now

At present we are concentrating on 'Made in China 2025' development and manufacture of basic fluid drive components.

Customized perfect solutions for global customers

JELPC® JELPC- China Pneumatics

We can develop customized system to satisfy your personalized requirements.

Jiaerling has a wide range of core competence, so our experts will participate in the whole process from product development to application and then we can provide you with customized products and system.

With the trend of multi-varieties, small batch, personalization and fast cycle production of industrial products, we make an immediate response. We combine professional technology accumulated in over 20 years with quick reaction to successfully customize and develop accessory products for global printing plant, rail transit, automobile production, injection molding rubber equipment, woodworking machinery, packaging machinery, medical machinery, intelligent manipulator and other fields.

Printing machinery industry applications

Rail transit

Automobile production line

Packaging machinery industry applications

Intelligent manipulator

Woodworking machinery industry applications

Injection molding machinery industry applications

Medical industry applications

Introduction for JELPC

JELPC was founded in 1999, special in manufacturing the pneumatics for 17 years. There are 30 units CNC, 18 units processing centre ,40 units general machine tools, 24 units external processing, 6 units laser printing machines, also 8 assembly lines. covers an area of 40 acres, with a total area of 50000 square meters. JELPC set R&D, production, procurement, logistics, sales in the integration of modern garden style plant. The new plant as a new starting point of JELPC laid a solid foundation for achieving an annual output of 7 million sets of pneumatic components and complete sets of equipment.

JELPC is a fully integrated manufacturing company, this system guarantees the customers a fully monitored production process and a consistently top quality products. JELPC are stronger at ODM in fast speed with owner R&D and test room. The engineer technical for process and products come together in the constant quest perfection. From the selection of raw materials to different kits, until to final assembly and test, all the entire process can be found on production site. Production data and test results undergo with critical analysis to support JELPC to upgrade the products and the manufacturing processes.

JELPC obtained ISO9000 and CE certification. Company-wide quality control is a permanent feature at JELPC.

JELPC offers the high qualitative products with great care. Great care is taken over customer service with the aim of providing the best solution for a specific requirement with in the allotted the and the utmost safety. JELPC deals with the customers in close co-operation, providing the necessary backup to solve any technical problems. JELCP do not treat the customers only as customers, also as investors and technical partner. All these allow both our products and services to gain world-wide recognition.

Our ethic

Mission declaration:

We strongly believe that Jelpc is to create the wealth for society, value for customers to improve automation for industry. We take "Trust, Rigorousness, Innovation, Responsibility" as our principle value, with our passion and wisdom to create difference, pursue perfect, increase core competitiveness to reach outstanding achievement, contribute to society. To establish internationally well-known pneumatic component manufacture base and dedicate to promote the prosperity for China's pneumatic industry.

Company Mission:

To improve automation for industries with pneumatic technology

Company Vision:

To be internationally well-known pneumatic component manufacture basement

Company Value:

Trust Rigorousness
Innovation Responsibility

Quality Policy:

Quality is the permanent pursuit of Jelpc

Slogan:

Good pneumatics-Jiaerling

Working Attitude:

Stick to promise/Serious attitude with speed/ Promise to success/ No excuse

At the existing moment of creation, driving and innovation improvement, we look forward with our long standing experience as engineer and manufacture of pneumatic solutions for designing customer-oriented applications. For this reason, we invest to build an international management and technical team, to introduce experts and equipments, to be focus on innovation, improvement and marketing to build JELPC as a respected and well-known enterprise in the global market and the leader of pneumatic industry.

General Manager:

JELPC- China Pneumatics

Technological development, scientific management

Our company possesses a group of technicians who are brilliant in technique and dedicated to work and are engaged in the research and development of various kinds of new products.
The company has many advanced equipments with which we can comprehend our new products very well.

1000m^2 research center

Participate in the formulation of national industry standards

- Mounting dimensions of the cylinder with single rod (inner diameter 8-25mm).
- Mounting surface of 3/2 way solenoid valve.
- Basic size, installation size, and kits size for cylinder with Removable bore in diameter from 32-320mm.

3 Invention Patent

- Pressure limiting valve & open and close method
- An earthquake gas cut off valve
- A measuring device of a slide valve pneumatic directional valve transition function

21 Utility Model Patent

- With quick connector direct type solenoid valve
- Ceramic seal solenoid valve
- With storage tank closed rotary valve
- Manipulator clamp cylinder
- Handle regulator
- A double stroke cylinder
- Pneumatic safely device

……

7 Appearance Patents

- Solenoid valve(5V)
- Solenoid valve(JSY)
- Packing box(4V210 Solenoid valve)
- Cylinder(SI32~40)
- Cylinder(SI32~60)
- Cylinder(SI80~100)
- Cylinder(JDNC/SQ)

Tire floating valve was rewarded developing prize of the Industrial Development

Draw control valve was rewarded National New Excellent Product prize

The compact cylinder was rewarded National New Excellent prize

Diaphragm solenoid valve was rewarded as the National New Excellent product

MCS solenoid valve islang was rewarded the third prize of National New Excellent product

MP301-8606010 air control valve was rewarded the third prize of National New Excellent product

Cylinder workshop

Precise and high-efficiency equipment, to guarantee high quality

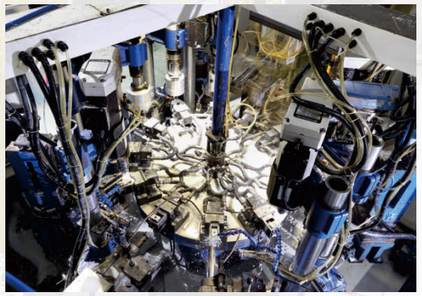

Automatic drilling machine

CNC machining center

Customized Equipment, Comprehensive Quality Guarantee System

Solenoid valve pilot head auto matic assembly production line

Turning and milling machine

Spindle automatic lathe

Precision assembly

Success comes from detail. JELPC has a group of senior specialized workers who control the products with great care

Solenoid Valvle Assembly Line

On line detection system for solenoid valve

PU Tube Production Department

3D projector

Strict quality conrol, strict in processes.

Integrated test equipment

Long life test

6th Dec 2014, JELPC with German famous pneumatic company AIRTEC company formally signed a long-term strategic cooperation agreement, It marked JELPC the internationalization development way up to a new step.

JELPC- China Pneumatics

JELPC and AIRTEC jointly held in 2015 in Hannover, Germany and Shanghai PTC Exhibition.

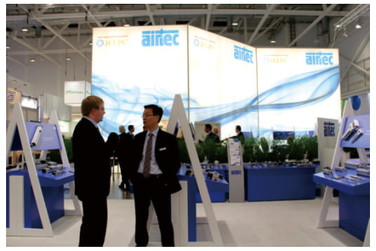

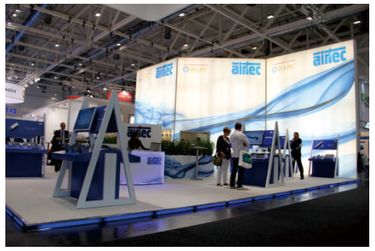

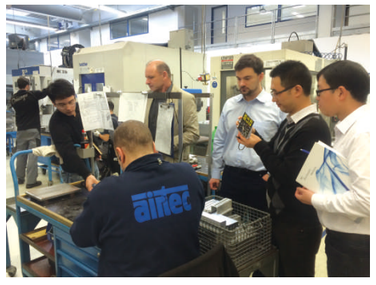

30th Nov.,2015,JELPC dispatch four technical backbone to AIRTEC Germany for technical communication and learning.

Products Display of AIRTEC from Germany

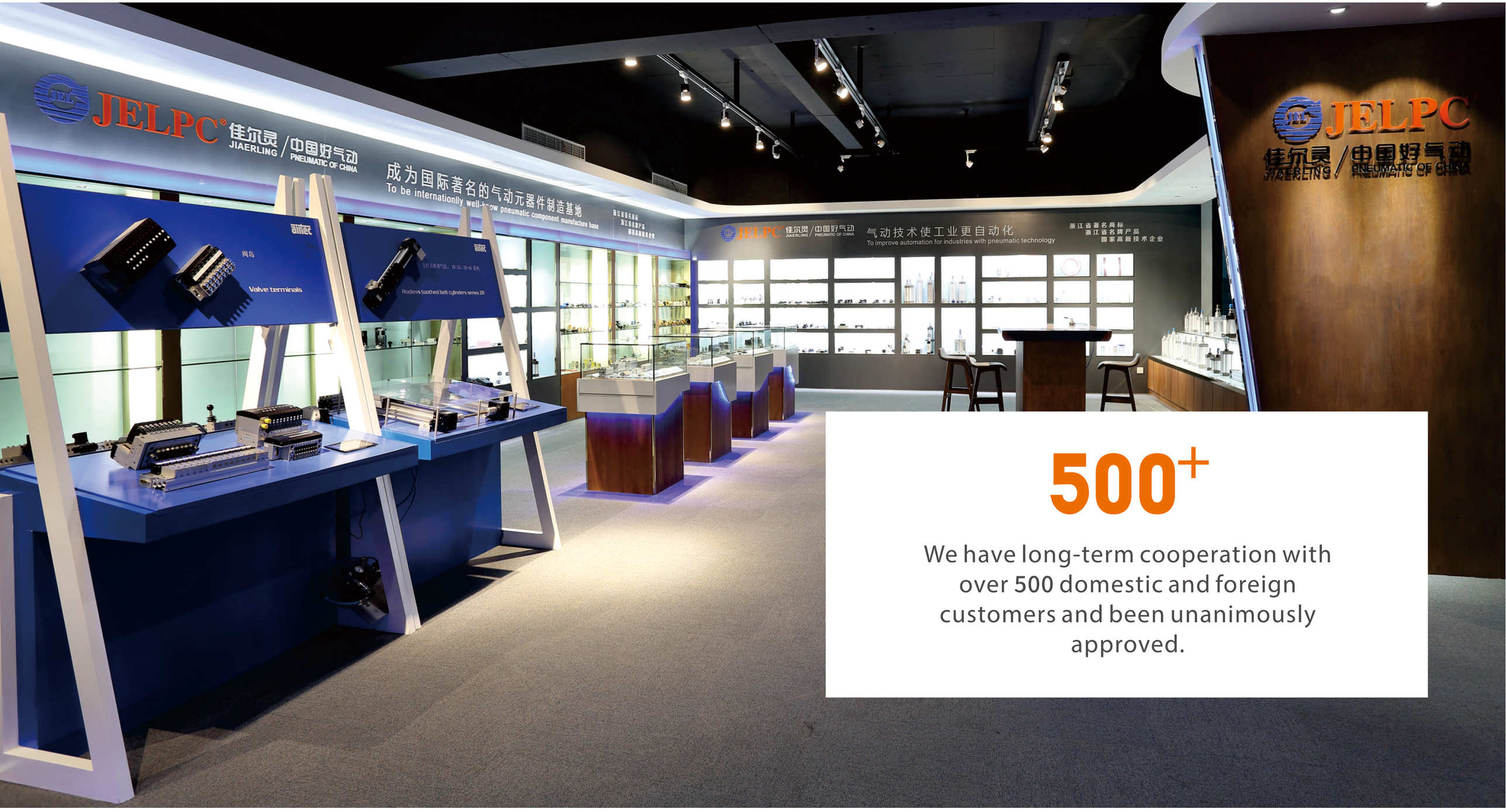

500+

We have long-term cooperation with over 500 domestic and foreign customers and been unanimously approved.

Successful Projects

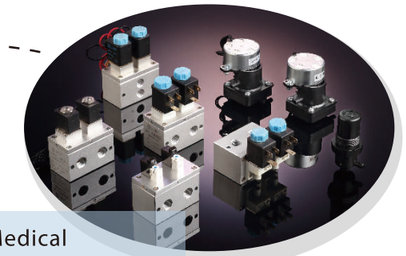

Medical industry applications

OEM

Traffic industry applications

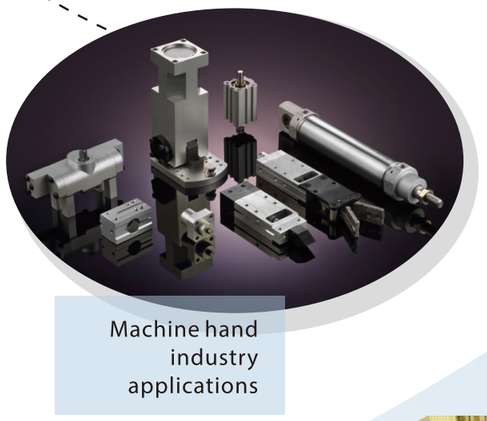

Machine hand industry applications

Packaging machinery industry applications

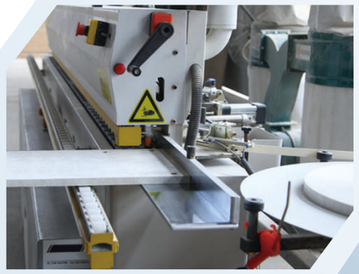

Woodworking machinery industry applications

Injection molding machinery industry applications

Applications involving industries

Automobile production line

Rail transit

Printing machinery industry applications

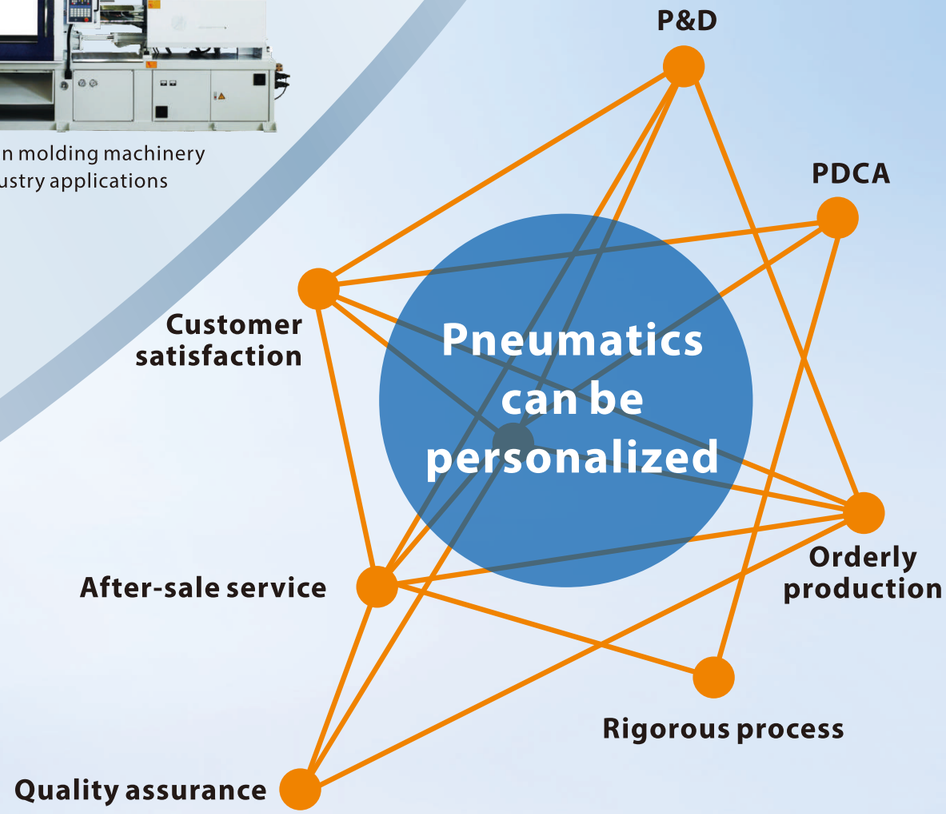

INDEX

CONTROL ELEMENT

- 4V100 Series Solenoid Valve, Air Pilot Valve (1-P01)
- 4V200 Series Solenoid Valve, Air Pilot Valve (1-P08)
- 4V300 Series Solenoid Valve, Air Pilot Valve (1-P16)
- 4V400 Series Solenoid Valve, Air Pilot Valve (1-P24)
- SV Series Solenoid Valve (1-P29)
- 5V100 Series Solenoid Valve, Air Pilot Valve (1-P31)
- 5V200 Series Solenoid Valve, Air Pilot Valve (1-P35)
- 5V300 Series Solenoid Valve, Air Pilot Valve (1-P39)
- 5V400 Series Solenoid Valve, Air Pilot Valve (1-P43)
- 100-400 Series Manifold (1-P46)
- MCS Series Multiple Connection System (1-P47)
- JVT307 High Frequency Valve (1-P49)
- JSY Series Solenoid Valve, Air piloted Valve (1-P51)
- 5JV Series Solenoid Valve (1-P54)
- JEL Series Solenoid Valve (1-P59)
- MVSD Series Solenoid Valve (1-P62)
- VF Series Solenoid Valve (1-P64)
- BM Series Solenoid Valve (1-P67)
- 551 Series NAMUR Solenoid Valve (1-P68)
- JEL10 Series Mini Solenoid Valve (1-P71)
- 3VJZF Series 3/2 Way Stop Solenoid Valve (1-P73)
- JEL Series Diaphragm Solenoid Valve (1-P75)
- JELVD Series Rotary Valve (1-P77)
- JELMP / TV Series Air Control Valve (1-P80)
- JELP, JELG Series Hand Lever Air Control Valve (1-P81)
- Coil, Seal Ring (1-P82)
- 3V1 Series Solenoid Valve (1-P83)
- 2P Series 2/2 Way Solenoid Valve (Direct Operated) (1-P87)
- 2V Series 2/2 Way Solenoid Valve (1-P88)
- 2W Series 2/2 Way Solenoid Valve (Direct Operated) (1-P90)
- 2W (Large Port) Series 2/2 Way Solenoid Valve (Direct Operated) (1-P91)
- 2L Series 2/2 Way Solenoid Valve (1-P93)
- VX Series 2/2 Way Solenoid Valve (Direct Operated) (1-P95)
- PU Series 2/2 Way Solenoid Valve (Direct Operated) (1-P96)
- PU Series Solenoid Valve (For Steam) (1-P97)
- PU225 Series Solenoid Valve (1-P98)
- 2Q Series 2/2 Way Valve (1-P99)
- JEL5404 Series High Pressure and Temperature Solenoid Valve (1-P100)
- JEL6213 Series Solenoid Valve (1-P101)
- BU Series 2/2 Way Solenoid Valve (1-P102)
- Vertical type/Pipe connecting type Solenoid pulse Valve (1-P103)
- 2/2 Viton Type Multimedia Angle Valve (1-P104)
- Stainless Steel Series Angle Valve (1-P106)
- Hand Pull Valve (1-P108)
- Hand Push Valve (1-P116)
- Hand Switching Valve (1-P117)
- Hand Draw Valve (1-P120)
- Foot Valve (1-P124)
- Mechanical Valve (1-P129)
- ASC, RE Series Flow Control Valve (1-P132)
- QE, QEA Series Quick Exhaust Valve (1-P134)
- ST Series Shuttle Valve (1-P135)
- Hand Sliding Valve (1-P136)

AIR SOURCE TREATMENT UNIT

- AC, BC Series Three-point Combination (F.R.L. Combination) (2-P01)
- AFC, BFC Series Two-point Combination (FR.L. Combination) (2-P02)
- AF, BF Series Filter (2-P04)
- AR, BR Series Regulator (2-P05)
- AFR, BFR Series Filter & Regulator (2-P06)
- AL, BL Series Lubricator (2-P07)
- JAC Series 1000~5000 Air Filter Combination (F.R.L. Combination) (2-P08)
- JAC Series 1010~5010 Air Filter Combination (FR.L. Combination) (2-P09)
- JAF Series 1000~5000 Air Filter (2-P11)
- JAR Series 1000~5000 Regulator (2-P12)
- JAW Series 1000~5000 Filter & Regulator (2-P14)
- JAL Series 1000~5000 Lubricator (2-P15)
- JC Series Air Filter Combination (3 or 2 Combination) (2-P17)
- FE Series Air Filter Combination (2 Combination) (2-P19)
- GC Series Air Source Treatment (3 or 2 Combination) (2-P23)
- ZYR10 Series Oxygen Supply Regulator (2-P25)
- MAR300LK Series Handle Regulator (2-P26)
- PTH Series Air Filter Combination (2-P28)
- JAD Series Auto-drain (2-P30)
- DPS Seris Digital Pressure Sensor (2-P31)
- HL Series Compressed Air Filter (2-P32)

INDEX

EXECUTION ELEMENT

- Golden Rules Sizing and Valculations in Pneumatics (3-P01)
- SI Series Standard Cylinder (Conforms to ISO15552 Standard) (3-P02)
- SI Series Standard Cylinder Accessory (Conforms to ISO15552 Standard) (3-P05)
- SIB Series Double Acting Booster Cylinder (3-P07)
- Super Economical Type SQ Series Standard Cylinder (Conforms to ISO15552 Standard) (3-P09)
- DNT Series Economical Cylinder (Conforms to ISO15552 Standard) (3-P13)
- SC / SU Series Standard Cylinder (3-P14)
- SCT Series Muti-position Cylinder (3-P17)
- SC / SU Series Standard Cylinder Accessory (3-P18)
- SL Series Lock Type Cylinder (3-P22)
- DN Series Stainless Steel Mini Cylinder (ISO6432 Standard) (3-P23)
- DSN Series Stainless Steel Mini Cylinder (ISO6432 Standard) (3-P29)
- DN/DSN Series Stainless Steel Mini Cylinder Accessory (3-P33)
- MA Series Stainless Steel Mini Cylinder (3-P35)
- MAC Series Stainless Steel Mini Cylinder (3-P40)
- MA/MAC Series Stainless Steel Mini Cylinder Accessory (3-P44)
- MAL Series Aluminum Alloy Mini Cylinder (3-P46)
- MALC Series Aluminum Alloy Mini Cylinder (3-P51)
- MAL/MALC Series Stainless Steel Mini Cylinder Accessory (3-P55)
- SDA Series Compact Cylinder (3-P57)
- CQ2 Series Thin Type Cylinder (3-P65)
- TCQ2 Series Guide Cylinder (3-P83)
- ADN Series New Compact Cylinder (Conforms to ISO21287 Standard) (3-P86)
- TADN Series Guide Cylinder (3-P91)
- PPRM Series Elbow Cylinder (3-P94)
- ZX Series Rodless Cylinder (3-P98)
- ZX Series Rodless Cylinder Mounting Parts (3-P102)
- MHL2 Series Wide Type Gripper (Parallel opening and closing type) (3-P104)
- Performing End of The Robot (Pneumatic Fingers) (3-P105)
- MXH Series Small Pneumatic Slide (Liner Guide) (3-P107)
- MXQ Series Pneumatic Slide (3-P108)
- CJP Series Pin Cylinder (Single Acting) (3-P109)
- CJ2 Series (Ø6～Ø16) Stainless Steel Mini Cylinder Double Acting (3-P110)
- C[D]U Series Free Installation Cylinder (Ø6～Ø32) (3-P113)
- TN Series Double Rod Cylinder (3-P116)
- CXS Series (Ø6～Ø32) Twin Rod Cylinder/ Basic Type (3-P120)
- MGP New Compact Tri-rod Cylinder (Ø20～Ø100) (3-P122)
- MSQ Series Rotational Platform (Gear Type) (3-P127)

PNEUMATIC ACCESSORY

- HAC, HAD Series Buffer (4-P01)
- HR Series Hydraulic Speed Regulator (4-P05)
- HAC, HAD Series Buffer Accessories (4-P06)
- Push-in Fittings Quick Type for Pneumatic Tubing (4-P07)
- Speed Controller (4-P10)
- Manual Valve (4-P10)
- Ball Valve (4-P10)
- Brass Push-In Tube Fitting & Nut Lock Tube Fitting (4-P11)
- Metal Push-In Tube Fitting (4-P13)
- Silencer (4-P13)
- PU/Nylon/PA (4-P13)

1

JELPC®

CONTROL ELEMENT

2 Air Source Treatment Unit

3 Execution Element

4 Pneumatic Accessory

CONTROL ELEMENT CONTENTS

1-01 4V100 Series Solenoid Valve, Air Pilot Valve

1-08 4V200 Series Solenoid Valve, Air Pilot Valve

1-16 4V300 Series Solenoid Valve, Air Pilot Valve

1-24 4V400 Series Solenoid Valve, Air Pilot Valve

1-29 SV100-400 Series Solenoid Valve

1-31 5V100 Series Solenoid Valve, Air Pilot Valve

1-35 5V200 Series Solenoid Valve, Air Pilot Valve

1-39 5V300 Series Solenoid Valve, Air Pilot Valve

1-43 5V400 Series Solenoid Valve, Air Pilot Valve

1-46 100-400 Series Manifold

1-47 MCS Series Multiple Connection System

1-49 JVT307 High Frequency Valve

1-51 JSY Series Solenoid Valve, Air piloted Valve

1-54 5JV Series Solenoid Valve

1-59 JEL Series Solenoid Valve

1-62 MVSD Series Solenoid Valve

1-64 VF Series Solenoid Valve

1-67 BM Series Solenoid Valve

1-68 551 Series NAMUR Solenoid Valve

1-71 JEL10 Series Mini Solenoid Valve

1-73 3VJZF Series 3/2 Way Stop Solenoid Valve

1-75 JEL Series Diaphragm Solenoid Valve

1-77 JELVD Series Rotary Valve

1-80 JELMP / TV Series Air Control Valve

1-81 JELP, JELG Series Hand Lever Air Control Valve

1-82 Coil, Seal Ring

1-83 3V1 Series Solenoid Valve

1-87 2P Series 2/2 Way Solenoid Valve (Direct Operated)

CONTROL ELEMENT CONTENTS

1-88 2V Series 2/2 Way Solenoid Valve

1-90 2W Series 2/2 Way Solenoid Valve (Direct Operated)

1-91 2W (Large Port) Series 2/2 Way Solenoid Valve (Direct Operated)

1-93 2L Series 2/2 Way Solenoid Valve

1-95 VX Series 2/2 Way Solenoid Valve (Direct Operated)

1-96 PU Series 2/2 Way Solenoid Valve (Direct Operated)

1-97 PU Series Solenoid Valve (For Steam)

1-98 PU225 Series Solenoid Valve

1-99 2Q Series 2/2 Way Valve

1-100 JEL5404 Series High Pressure and Temperature Solenoid Valve

1-101 JEL6213 Series Solenoid Valve

1-102 BU Series 2/2 Way Solenoid Valve

1-103 Vertical type/Pipe connecting type Solenoid pulse Valve

1-104 2/2 Viton Type Multimedia Angle Valve

1-106 Stainless Steel Series Angle Valve

1-108 Hand Pull Valve

1-116 Hand Push Valve

1-117 Hand Switching Valve

1-120 Hand Draw Valve

1-124 Foot Valve

1-129 Mechanical Valve

1-132 ASC, RE Series Flow Control Valve

1-134 QE, QEA Series Quick Exhaust Valve

1-135 ST Series Shuttle Valve

1-136 Hand Sliding Valve

JELPC®

Control Element Instructions

Design, attention of selection

Warning

1. The characteristics of compressed air and the use of this product must be fully understood when the circuit is designed. Please use the specifications according to the specified in the catalogue. Beyond the norms of the pressure, temperature, working medium and other conditions of use, will cause poor operation and affect the safety of the operation.
2. Working medium is compressed air, with expansion, the unstable pressure may cause fly out, spray, or leak which need attention.
3. Need to take into account if emergency or instant switching power supply when design and selectio , which will cause dislocation or movement of the drive object and influence safety. And need to take into account suited control machine when use it.
4. Excessive water in the pipeline will cause the solenoid valve to run bad, please install water removal device.
5. When air compressor operation it will cause carbon dust and impurities, excessive adhesion in the solenoid valve will lead to poor operation, therefore the front-end should install filters to avoid internal stuck inside the valve body.
6. Surrounding environmental requirements:
   (1) Avoid use in chemicals, flammable, corrosive and sea water, high temperature and other environment
   (2) Avoid use in the heat and heat radiation environment
   (3) The use of the surrounding environment temperature, should according to the scope of the specification parameter list
   (4) Avoid outdoor hot sun, rain, dust and other environment which will cause instability quality
   (5) Should avoid use in the oily, flammable and explosive occasions

Caution

1. When the middle position in the three position stop and used for pressure maintenance, need to pay attention to the pipeline gas source leakage and supply of air supply has changed, influence of pressure drop caused by position change.
2. The operation of the machine needs to worried that the leakage current affects the normal operation of the other controllers,so it is necessary to use the appropriate loop to ensure the device, avoid the wrong action of the solenoid valve.

Notice items of operation

Warning

1. When the solenoid valve is electrified, the electromagnetic valve can not be switched by the manual button. After using the manual button it should return to normal position.
2. Solenoid valve coil can not be connected to the wrong voltage, to avoid damage to the solenoid valve coil
3. The use of the instantaneous power of the double acting solenoid valve should more than 0.1 second.
4. Voltage supply need to install voltage stabilizing device, the range of voltage fluctuation should be controlled within 10% to avoid sudden wave generation.

Notice items of assembly

Warning

1. Installation way need pay attention: the double action type and three position type, please installed horizontally.
2. If there is occasions which vibration more than 50m/S² in the installation position, please do not use. If in a slight vibration occasion, the solenoid valve spool and the vibration direction must be right angle of ninety degrees when installation, avoid loosening and shedding phenomenon.
3. Before mate air pipe, need to prevent foreign debris and dust entering the solenoid valve, cause breakdown and wrong actions.
4. Before mate air pipe and assembly fittings, need to prevent leakage and paint of raw material belt into the tube. When winding the raw material belt, need reserve 1~1.5 thread, do not winding the raw material belt.
5. If using liquid fixing glue (Anaerobic adhesive) to lock fitting, should avoid excess liquid glue inflow, cause parts get stuck and poor operation.
6. Should use the appropriate torque to avoid damage to the product during in mating air pipe (lock fitting).
7. Solenoid valve exhaust port need to install silencer device to avoid excessive exhaust noise. If do not install silencer device, should avoid inhalation of foreign body in exhaust port perimeter, and exhaust port should be installed downward (foreign body easy to inhale when installed upward).
8. When using the base, need to pay attention to the concentration of exhaust, not completely exhausted out can cause backpressure phenomenon, and influence the switching of the solenoid valve and the normal operation.
9. After installation, in order to avoid damage of the plastic material and lead to obstruction and poor movement, should avoid contact with water soluble solvents and coating equipment and so on.
10. When using base to fix solenoid valve,should pre tight positioning and then clamping balanced on both sides to avoid leakage phenomenon.
11. The piping distance between solenoid valve and cylinder should avoid influence operation effect and response speed due to the long distance.

Caution

1. Please consider the heat dissipation problem when long time power usage.
2. When use mid-position closed solenoid valve, should pay special attention to whether there is leakage between the solenoid valve and the cylinder, thus causing the error movement or position movement phenomenon.

Control Element Instructions

Specification for installation and use

Rotary lock using a method 1: Manual press down to the direction of the rotation of the arrow.	Rotary lock using a method 2: Use a screwdriver to rotate in the direction of the arrow, if not rotation, then it is same as non locking push method.
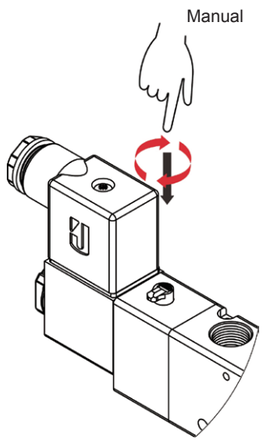	**Caution** Please press gently with a screwdriver (when using the rotary tool (torque0.1N.m) 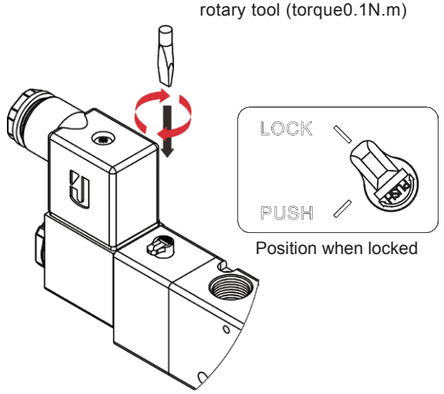

1

Avoid the effect of vibration on the sliding column of solenoid valve:
It is available at right angle of ninety degrees of the vibration direction and the movement direction of the solenoid valve when installation to avoid the effect of vibration on the sliding column of solenoid valve.

☆ Single coil solenoid valve
○ It is better to install the coil upward or horizontal

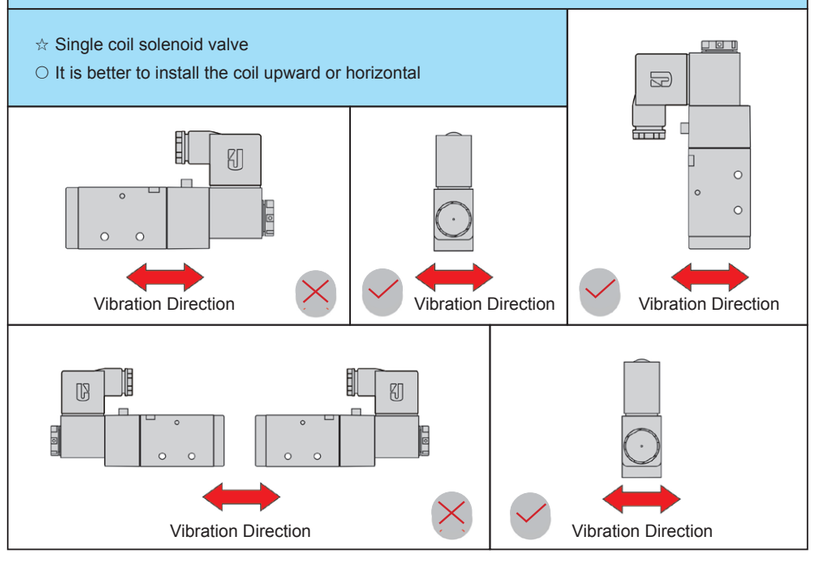

Control Element Instructions

Specification for installation and use

2

To avoid condensate water, oil flow into solenoid valve's coil, the best assembly type is horizontal installation or upalong.

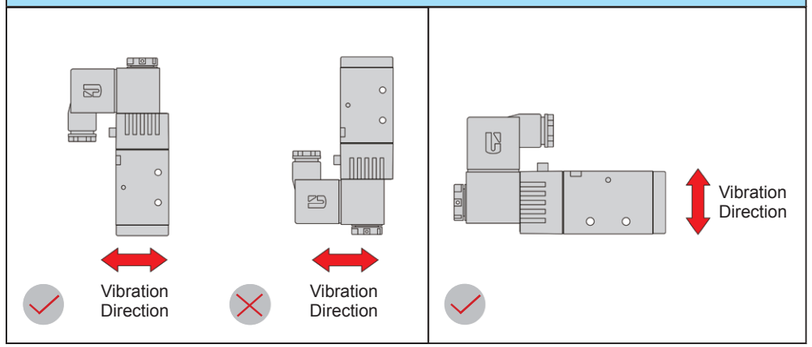

Matters needing attention during in maintenance and repair

Warning

1. Before maintenance, please make sure the power and the air-pressure source are closed, confirm that there is no residual voltage, to start work after checking all the things are ok.
2. Please make sure all the manual operation are back to the original position before start work
3. Only the technicist who is familiar with the structure of the product can dissembly the valve. Must avoid the safety problem caused by the wrong way of dissembly and assembling.

Caution

1. Please make sure the air source is dry without any moisture or impurity, and pay attention to the front filter and drainer whether they are normal operation.
2. The valve is smeared with lubrication oil when assemblying, so do not need to feed oil during normal operation. If you need to smear oil, please use the lubrication oil ISO-VG32, otherwise it may cause bad operation (need to smear oil when the work occasion is micro moisture in the air and fast working)
3. During in maintenance and repair, should be regularly scheduled to perform, and confirm do normal operation as follows:
   (1) Whether the air pressure is compressed in a stable range?
   (2) Whether the front filter and drainer are ok?
   (3) Whether the connect position or tubing are untight? Whether the connect position is ok?
   (4) Whether the condition of the valve is ok? Whether the operation is delay? Whether the condition of exhaust is ok? Whether there is some allophone?
   (5) Whether the pipeline system of the actuator is ok? Whether the start and stop operation of the terminal is ok? Whether the load system is ok?
   (6) Whether the oil feed system is ok? Whether the adjustment of the oil is appropriate?
   (7) Whether the exhaust system is smooth? Whether it is blocking? Whether the speed of the exhaust is ok?

J4V100 Series
Solenoid Valve, Air Pilot Valve

JELPC® | JELPC — China Pneumatic

J3V110-06

4A110-06

J4V110-06

J4V120-06

J4V120-06

J4V130-06

Features

1. Valve spool use seals which import from Japan to guarantee the life time and consistency.
2. To import German high standard special grease which provides film in order to reduce friction.
3. To import German soft magnetic stainless steel to improve the magnetic performance and reduce coil capacity 30%.
4. Piloted valve base use new design mould, with new visual style.

Ordering Code

J4V	-	1	-	10	-	06	-	B	-	AC220V	-	W	-	F
Specification		Series Code		Coil and Type		Port Size		Connection and Initial status		Standard Voltage		Wiring		Joint
J4V: 5/2 (3) way solenoid valve		1: 100 Series		10: Single coil		M5: M5×0.8		Blank: Threaded		DC12V DC24V		Blank: Without light terminal		1F-20F
4A: 5/2 (3) way air pilot valve				20: Double coil		06: 1/8"		B: Sub-plated mounted (for 5/2,5/3 way only)		AC24V 50Hz/60Hz		LD1: White with light terminal		
J3V: 3/2 way solenoid valve				30C: Mid-position closed				NC: 3/2 way normal close		AC110V 50Hz/60Hz		W: Lead wire		
3A: 3/2 way air pilot valve				30E: Mid-position exhausted				NO: 3/2 way normal open		AC220V 50Hz/60Hz				
				30P: Mid-position pressed						AC380V 50Hz/60Hz				

Specification

Model	J4V110-M5	J4V120-M5	J4V130C-M5	J4V130E-M5	J4V130P-M5	J4V110-06	J4V120-06	J4V130C-06	J4V130E-06	J4V130P-06
	4A110-M5	4A120-M5	4A130C-M5	4A130E-M5	4A130P-M5	4A110-06	4A120-06	4A130C-06	4A130E-06	4A130P-06
Valve Type	5/2 way		5/3 way			5/2 way		5/3 way		
Effective Cross Section Area	10 mm^2 (CV = 0.56)		7 mm^2 (CV = 0.40)			12 mm^2 (CV = 0.67)		9 mm^2 (CV = 0.5)		

Model	J3V110-M5	J3V120-M5	3A110-M5	3A120-M5	J3V110-06	J3V120-06	3A110-06	3A120-06
Valve Type	3/2 way							
Effective Cross Section Area	10 mm^2 (CV = 0.56)				12 mm^2 (CV = 0.67)			
Port Size	Inlet, Outlet, Exhaust Port = M5 × 0.8				Inlet, Outlet, Exhaust Port = G 1/8"			
Working Medium	40 Micron Filtered Air							
Operation	Internal piloted							
Working-pressure	0.15 ~ 0.8 MPa							
Max. Test Pressure	1.2 MPa							
Ambient Temperature	-20 ~ 70℃							
Operating Voltage Tolerance	± 10%							
Power Consumption	AC: 3VA DC: 2.8W							
Connector Protection	F Class, IP 65							
Wiring / Connector	Cable / Lead Wire or DIN Connector							
Switching Frequency	5 Cycles / Sec.							
Response Time	0.05 Sec.							

ISO9001:2008 CE

J4V100 Series
Solenoid Valve, Air Piloted Valve

Valve
J4V100
J4V200
J4V300
J4V400
SV
5V100
5V200
5V300
5V400
Manifold
MCS
JVT307
JSY
5JV
JEL
MVSD
VF
BM
551
JEL10
3VJZF
Diaphragm
JELVD
JELMP
JELP/G
Coil
3V1
2P
2V
2W
2W(Big)
2L
VX
PU
PU225
2Q
JEL5404
JEL6213
BU
Pulse
JEL.JZF
4H
TSV
MPV
4HV
HV, K
4R
4F210
FV
MSV
JM
ASC, RE
QE, QEA
ST
HSV

Internal Structure

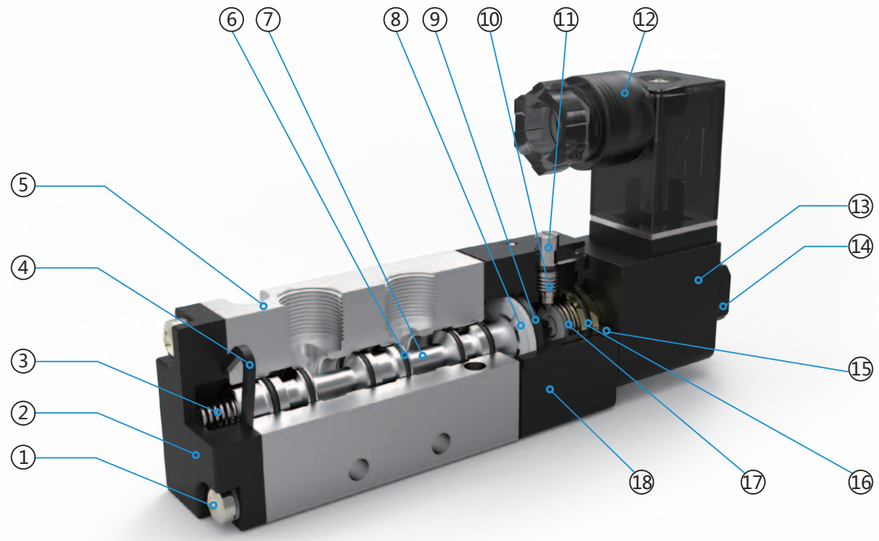

Parts

Number	Name	Number	Name	Number	Name
1	Cross slot pan screw	7	Valve spool	13	Coil
2	Back cover	8	Piston	14	Coil nut
3	Spring	9	Y ring	15	Connecting part
4	Anomalous seal	10	Spring	16	O ring
5	Valve body	11	Mannual ride spindle	17	Plunger
6	Flat ring	12	Terminal	18	Piloted valve base

Flow Chart

J4V110-M5

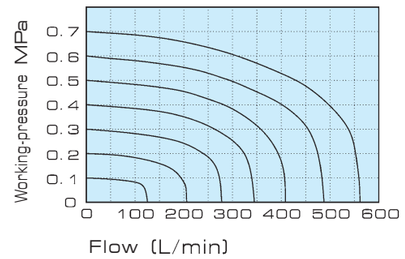

J4V110-06

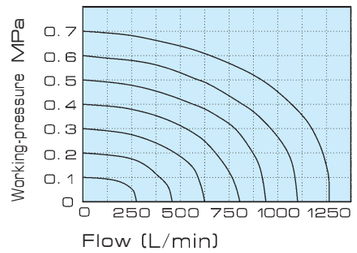

Valve
J4V100
J4V200
J4V300
J4V400
SV
5V100
5V200
5V300
5V400
Manifold
MCS
JVT307
JSY
5JV
JEL
MVSD
VF
BM
551
JEL10
3VJZF
Diaphragm
JELVD
JELMP
JELP/G
Coil
3V1
2P
2V
2W
2W(Big)
2L
VX
PU
PU225
2Q
JEL5404
JEL6213
BU
Pulse
JEL.JZF
4H
TSV
MPV
4HV
HV, K
4R
4F210
FV
MSV
JM
ASC, RE
QE, QEA
ST
HSV

Overall Dimension

J4V110-M5

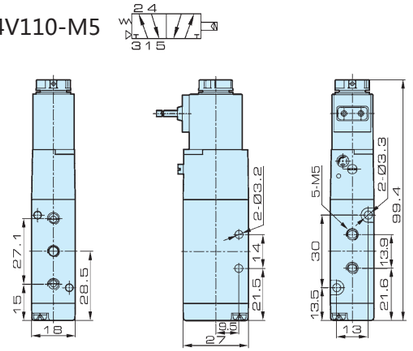

J4V110-M5

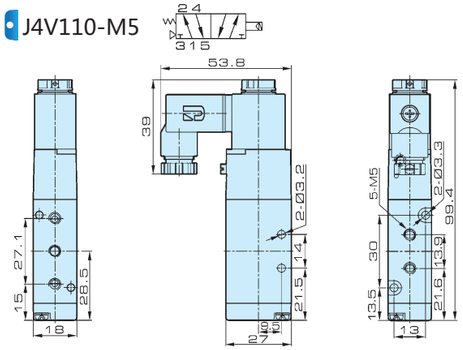

J4V120-M5

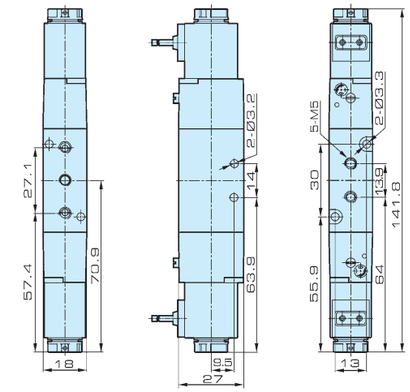

J4V120-M5

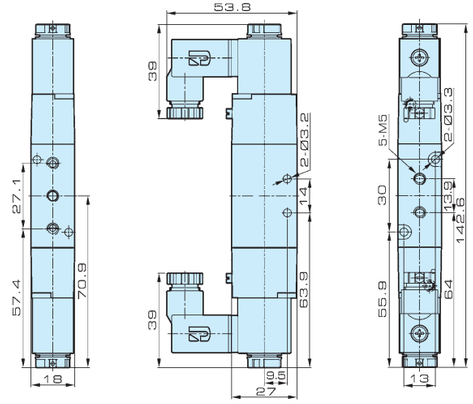

J4V130-M5

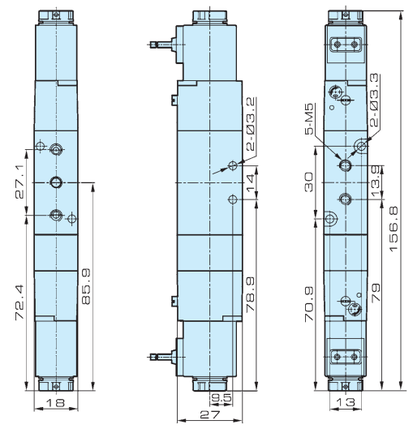

J4V130-M5

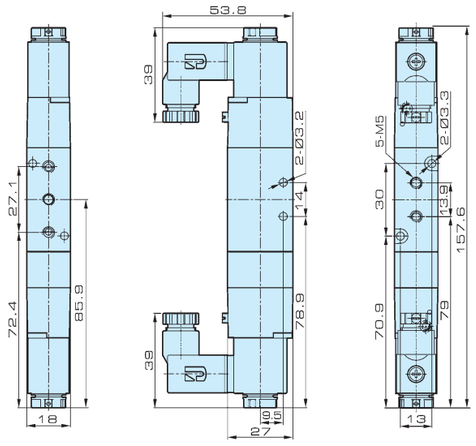

Overall Dimension

J4V110-06

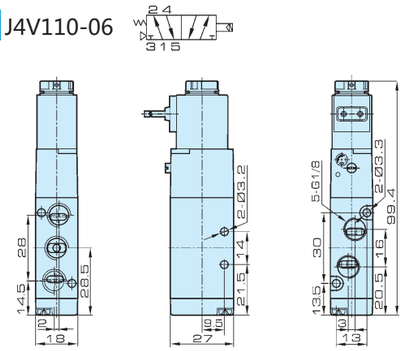

J4V110-06

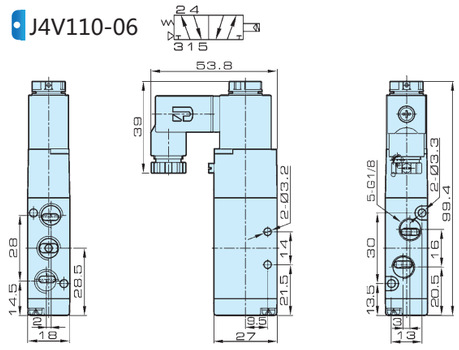

J4V120-06

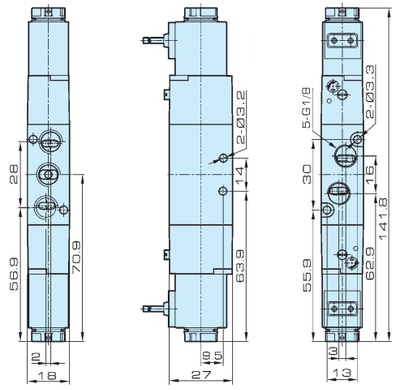

J4V120-06

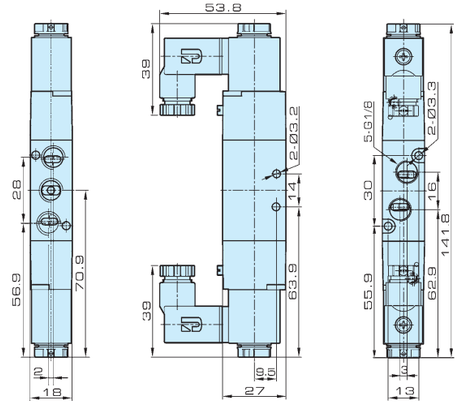

J4V130-06

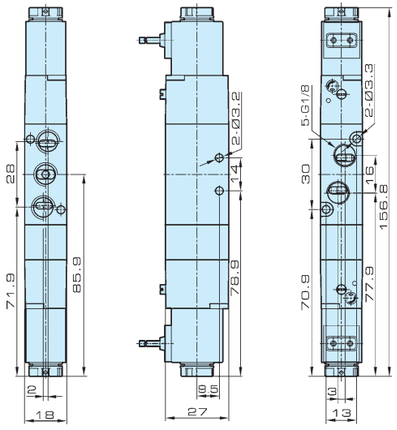

J4V130-06

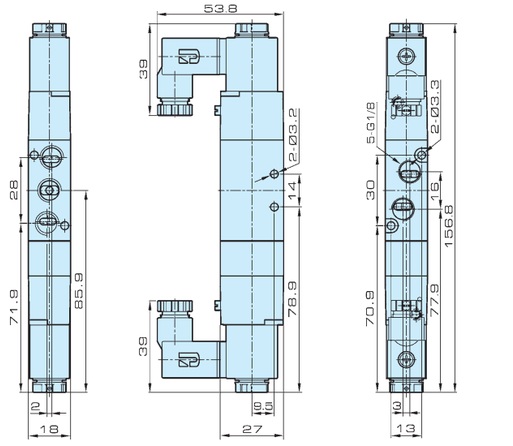

Valve
J4V100
J4V200
J4V300
J4V400
SV
5V100
5V200
5V300
5V400
Manifold
MCS
JVT307
JSY
5JV
JEL
MVSD
VF
BM
551
JEL10
3VJZF
Diaphragm
JELVD
JELMP
JELP/G
Coil
3V1
2P
2V
2W
2W(Big)
2L
VX
PU
PU225
2Q
JEL5404
JEL6213
BU
Pulse
JEL.JZF
4H
TSV
MPV
4HV
HV, K
4R
4F210
FV
MSV
JM
ASC, RE
QE, QEA
ST
HSV

JELPC® | JELPC — China Pneumatic

Valve
J4V100
J4V200
J4V300
J4V400
SV
5V100
5V200
5V300
5V400
Manifold
MCS
JVT307
JSY
5JV
JEL
MVSD
VF
BM
551
JEL10
3VJZF
Diaphragm
JELVD
JELMP
JELP/G
Coil
3V1
2P
2V
2W
2W(Big)
2L
VX
PU
PU225
2Q
JEL5404
JEL6213
BU
Pulse
JEL.JZF
4H
TSV
MPV
4HV
HV, K
4R
4F210
FV
MSV
JM
ASC, RE
QE, QEA
ST
HSV

Overall Dimension

4A110-M5

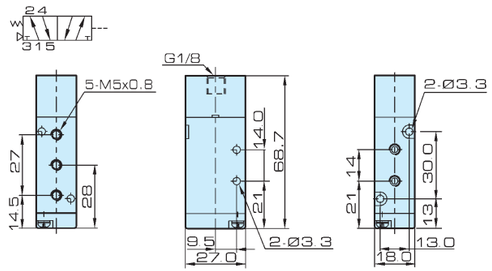

4A110-06

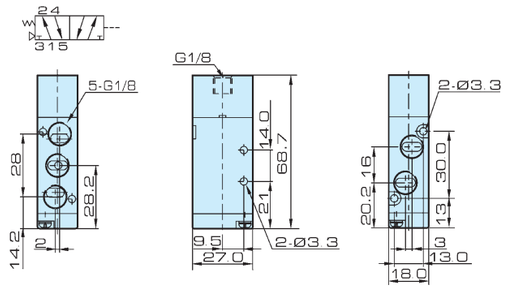

4A120-M5

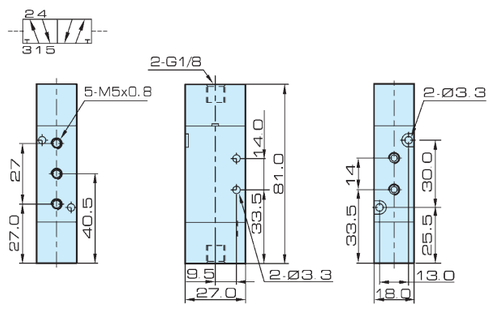

4A120-06

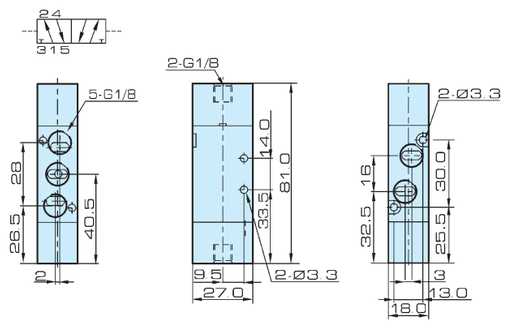

4A130-M5

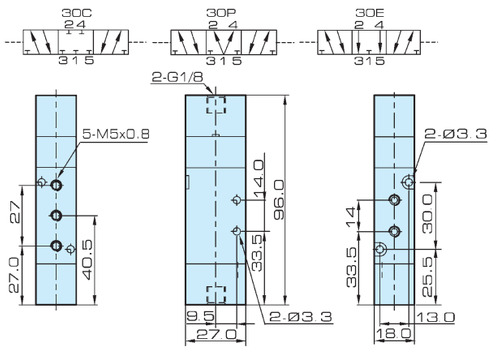

4A130-06

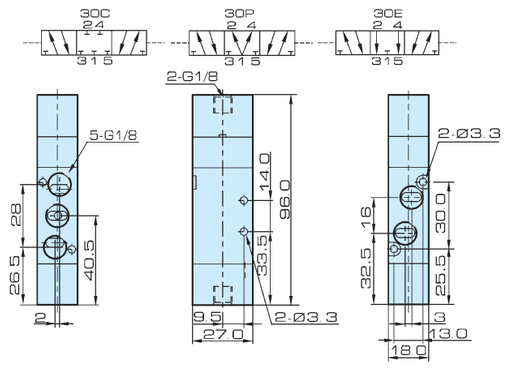

Overall Dimension

J3V110-M5

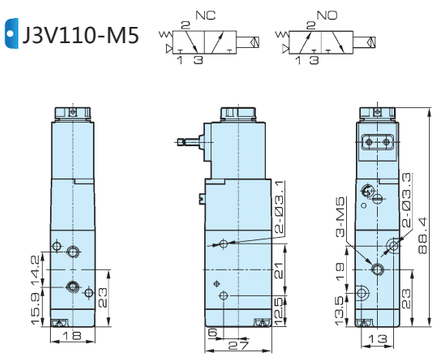

J3V110-M5

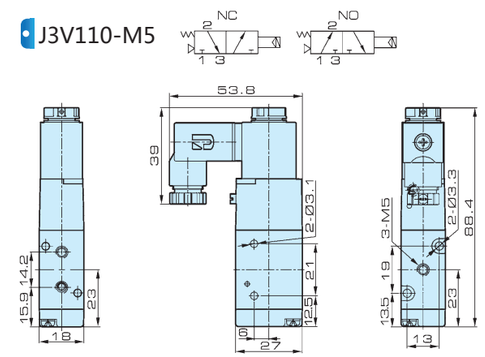

J3V120-M5

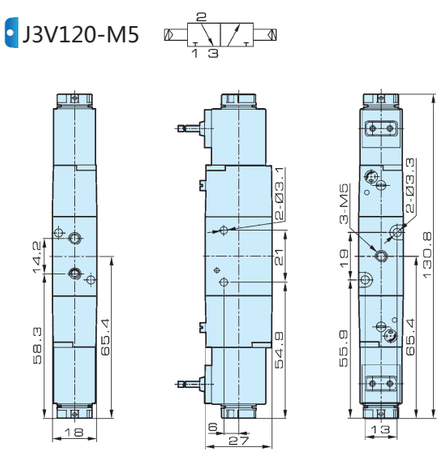

J3V120-M5

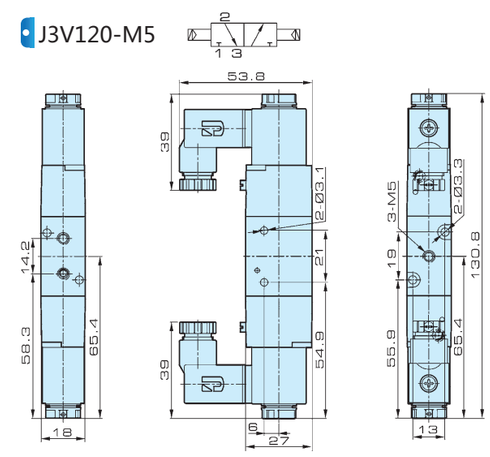

J3V110-06

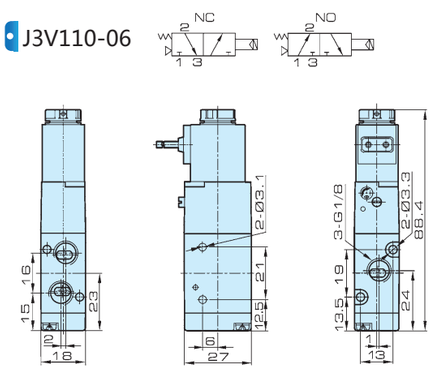

J3V110-06

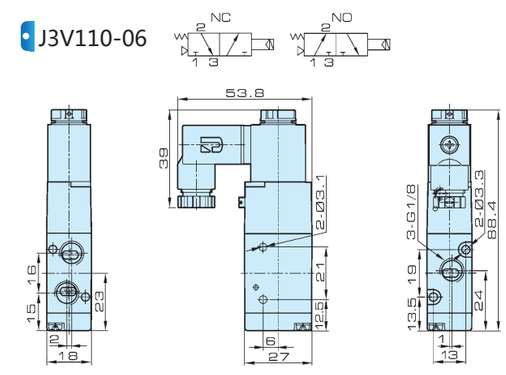

J4V100 Series
Solenoid Valve, Air Pilot Valve

JELPC — China Pneumatic

Overall Dimension

J3V120-06

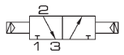

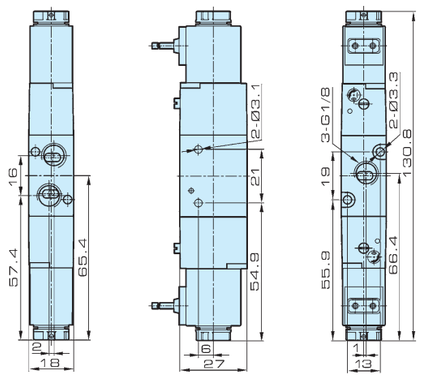

J3V120-06

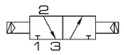

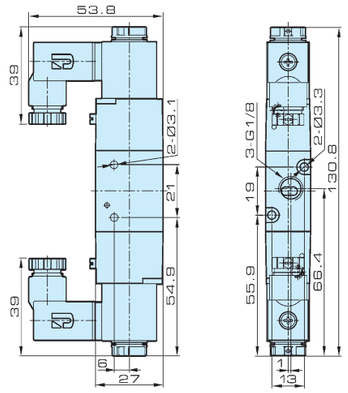

3A110-M5

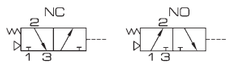

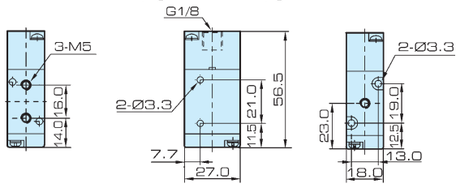

3A110-06

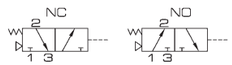

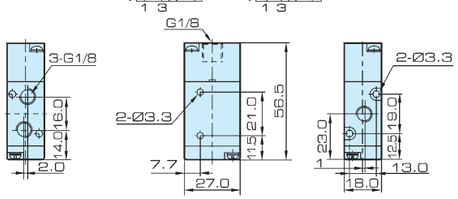

3A120-M5

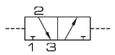

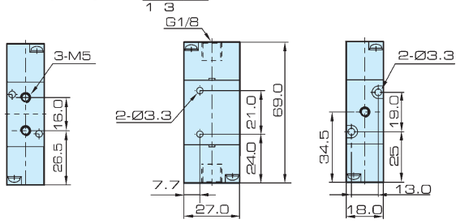

3A120-06

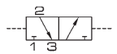

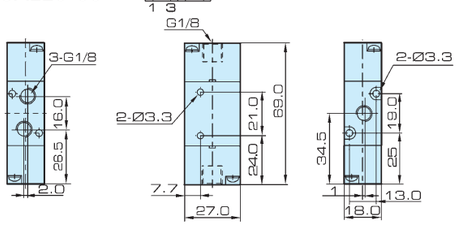

ISO9001:2008 CE

J4V200 Series
Solenoid Valve, Air Piloted Valve

J3V210-08

4A210-08

J4V210-08

J4V210-08B

J4V220-08

J4V220-08

J4V230C-08

Features

1. Valve spool use seals which import from Japan to guarantee the life time and consistency.
2. To import German high standard special grease which provides film in order to reduce friction.
3. To import German soft magnetic stainless steel to improve the magnetic performance and reduce coil capacity 30%.
4. Piloted valve base use new design mould, with new visual style.

Ordering Code

J4V	-	2	-	10	-	08	-	B	-	AC220V	-	W	-	F
Specification		Series Code		Coil and Type		Port Size		Connection and Initial status		Standard Voltage		Wiring		Joint
J4V: 5/2 (3) way solenoid valve		2: 200 Series		10: Single coil		06: 1/8"		Blank: Threaded		DC12V DC24V		Blank: Without light terminal		1F-20F
4A: 5/2 (3) way air pilot valve				20: Double coil		08: 1/4"		B: Sub-plated mounted (for 5/2,5/3 way only)		AC24V 50Hz/60Hz		LD1: White with light terminal		
J3V: 3/2 way solenoid valve				30C: Mid-position closed				NC: 3/2 way normal close		AC110V 50Hz/60Hz		W: Lead wire		
3A: 3/2 way air pilot valve				30E: Mid-position exhausted				NO: 3/2 way normal open		AC220V 50Hz/60Hz				
				30P: Mid-position pressed						AC380V 50Hz/60Hz				

Specification

Model	J4V210-06	J4V220-06	J4V230C-06	J4V230E-06	J4V230P-06	J4V210-08	J4V220-08	J4V230C-08	J4V230E-08	J4V230P-08
	4A210-06	4A220-06	4A230C-06	4A230E-06	4A230P-06	4A210-08	4A220-08	4A230C-08	4A230E-08	4A230P-08
Valve Type	5/2 way		5/3 way			5/2 way		5/3 way		
Effective Cross Section Area	14 mm^2 (CV=0.78)		12 mm^2 (CV=0.67)			16 mm^2 (CV=0.89)		12 mm^2 (CV=0.67)		

Model	J3V210-06	J3V220-06	3A210-06	3A220-06	J3V210-08	J3V220-08	3A210-08	3A220-08
Valve Type	3/2 way							
Effective Cross Section Area	14 mm^2 (CV = 0.78)				16 mm^2 (CV = 0.89)			
Port Size	Inlet, Outlet, Exhaust Port = G 1/8"				Inlet, Outlet = G 1/4", Exhaust Port = G 1/8"			
Working Medium	40 Micron Filtered Air							
Operation	Internal piloted							
Working-pressure	0.15 ~ 0.8 MPa							
Max. Test Pressure	1.2 MPa							
Ambient Temperature	-20 ~ 70℃							
Operating Voltage Tolerance	± 10%							
Power Consumption	AC: 5.5VA DC: 4.8W							
Connector Protection	F Class, IP 65							
Wiring / Connector	Cable / Lead Wire or DIN Connector							
Switching Frequency	5 Cycles / Sec.							
Response Time	0.05 Sec.							

JELPC® | JELPC — China Pneumatic

Internal Structure

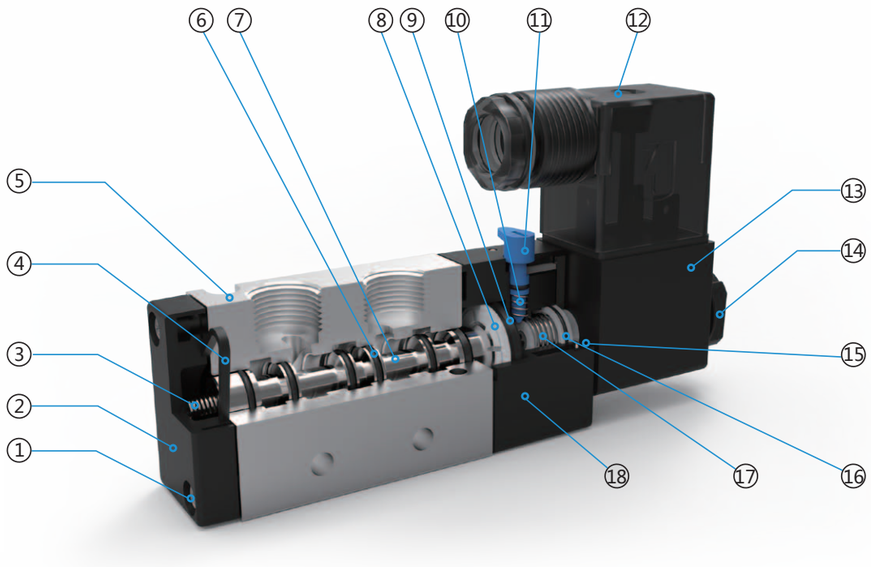

Parts

Number	Name	Number	Name	Number	Name
1	Cross slot pan screw	7	Valve spool	13	Coil
2	Back cover	8	Piston	14	Coil nut
3	Spring	9	Y ring	15	Connecting part
4	Anomalous seal	10	Spring	16	O ring
5	Valve body	11	Mannual ride spindle	17	Plunger
6	Flat ring	12	Terminal	18	Piloted valve base

Flow Chart

J4V210-06

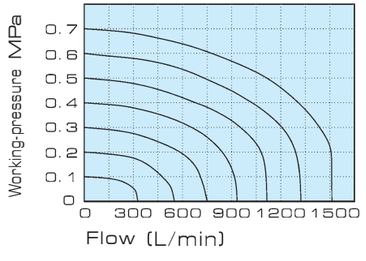

J4V210-08

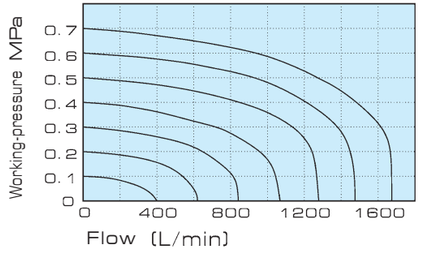

ISO9001:2008 CE

J4V200 Series
Solenoid Valve, Air Piloted Valve

Overall Dimension

J4V210-06

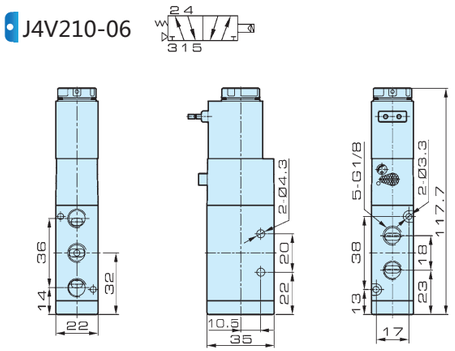

J4V210-06

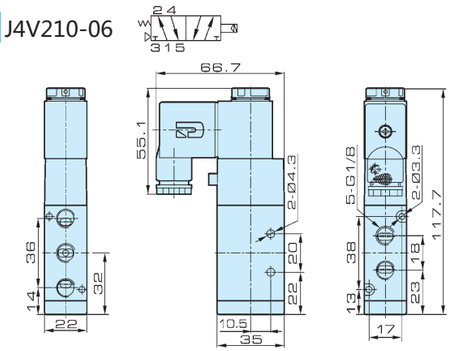

J4V220-06

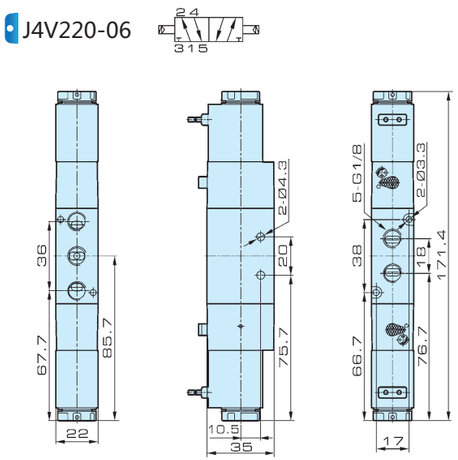

J4V220-06

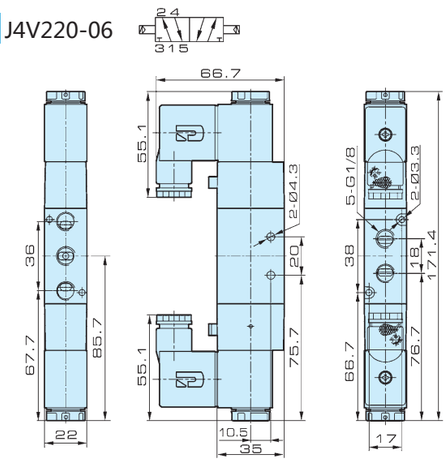

J4V230-06

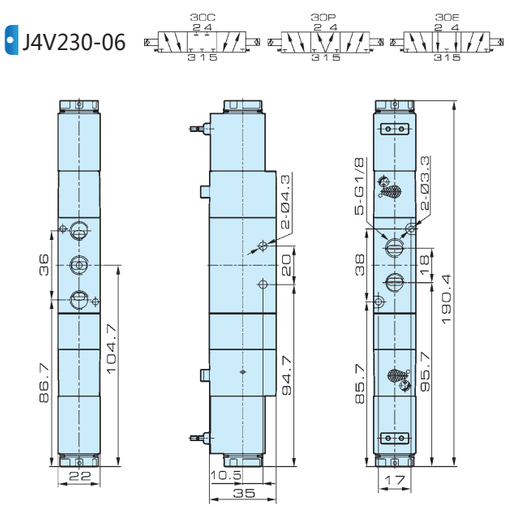

J4V230-06

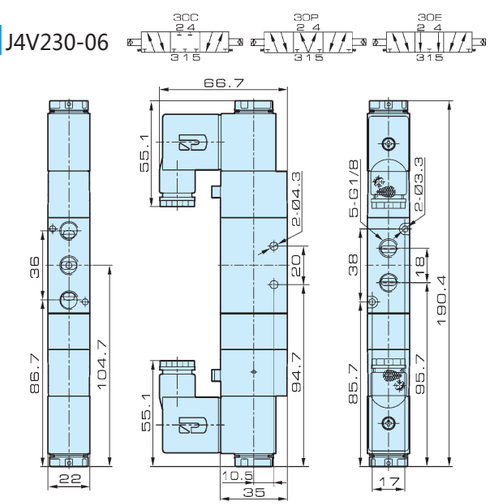

Valve
J4V100
J4V200
J4V300
J4V400
SV
5V100
5V200
5V300
5V400
Manifold
MCS
JVT307
JSY
5JV
JEL
MVSD
VF
BM
551
JEL10
3VJZF
Diaphragm
JELVD
JELMP
JELP/G
Coil
3V1
2P
2V
2W
2W(Big)
2L
VX
PU
PU225
2Q
JEL5404
JEL6213
BU
Pulse
JEL.JZF
4H
TSV
MPV
4HV
HV, K
4R
4F210
FV
MSV
JM
ASC, RE
QE, QEA
ST
HSV

JELPC® | JELPC — China Pneumatic

Overall Dimension

J4V210-08

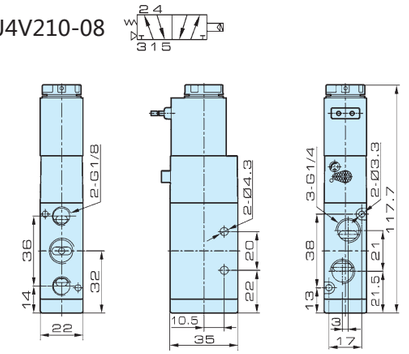

J4V210-08

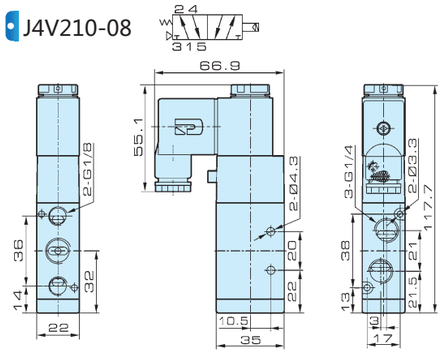

J4V220-08

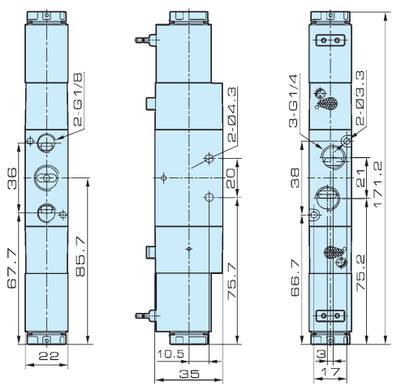

J4V220-08

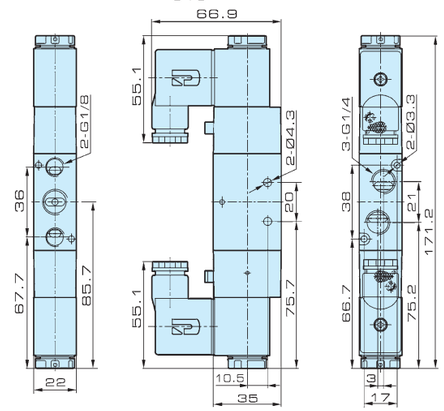

J4V230-08

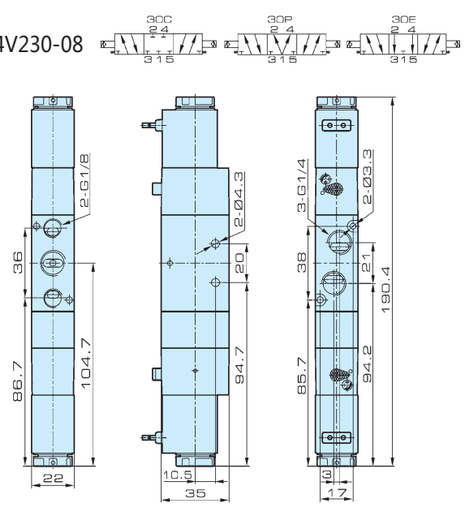

J4V230-08

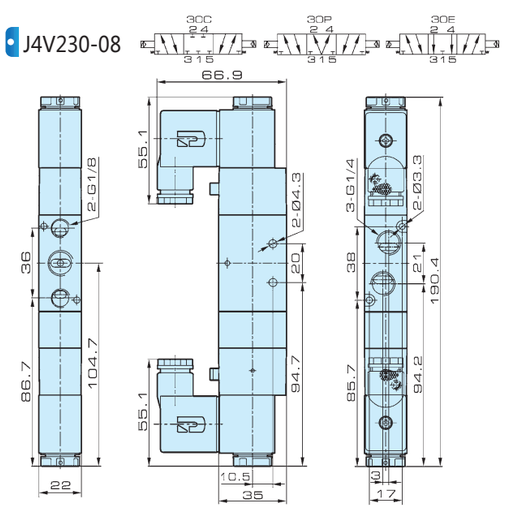

J4V200 Series
Solenoid Valve, Air Piloted Valve

Overall Dimension

J4V210-06B

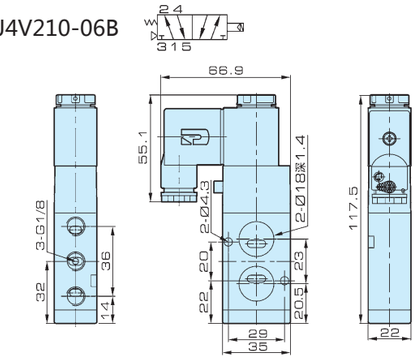

J4V210-08B

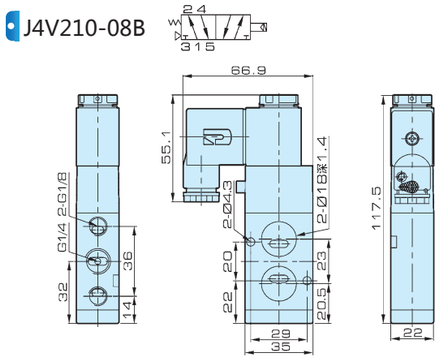

J4V220-06B

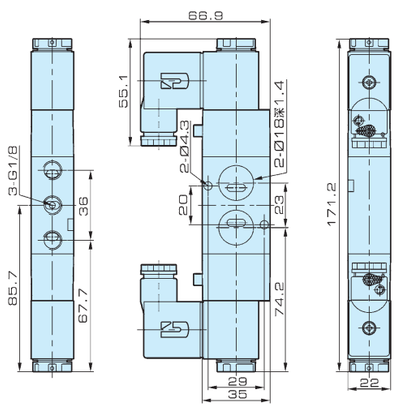

J4V220-08B

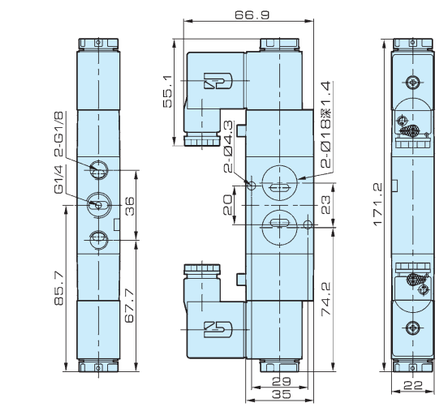

J4V230-06B

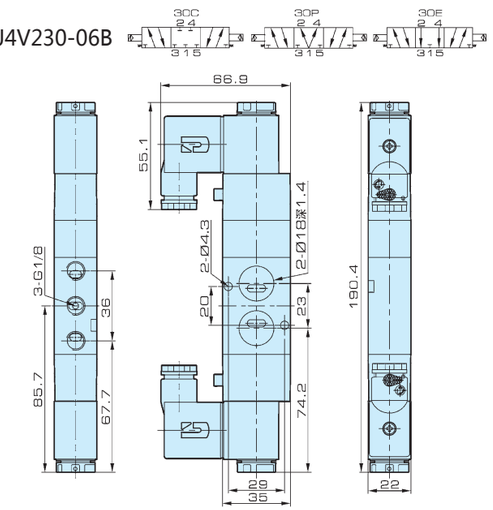

J4V230-08B

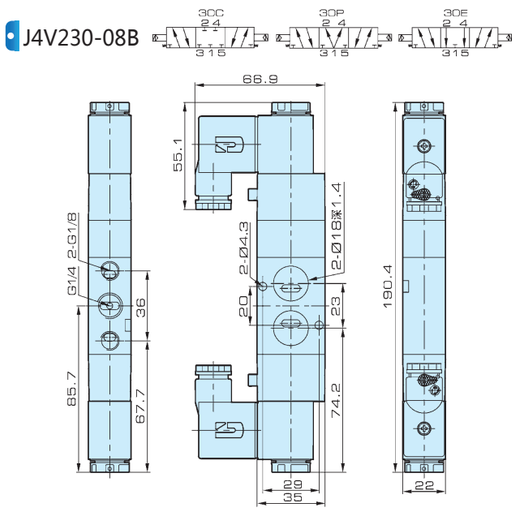

Valve
J4V100
J4V200
J4V300
J4V400
SV
5V100
5V200
5V300
5V400
Manifold
MCS
JVT307
JSY
5JV
JEL
MVSD
VF
BM
551
JEL10
3VJZF
Diaphragm
JELVD
JELMP
JELP/G
Coil
3V1
2P
2V
2W
2W(Big)
2L
VX
PU
PU225
2Q
JEL5404
JEL6213
BU
Pulse
JEL.JZF
4H
TSV
MPV
4HV
HV, K
4R
4F210
FV
MSV
JM
ASC, RE
QE, QEA
ST
HSV

JELPC® | JELPC — China Pneumatic

Overall Dimension

4A210-06

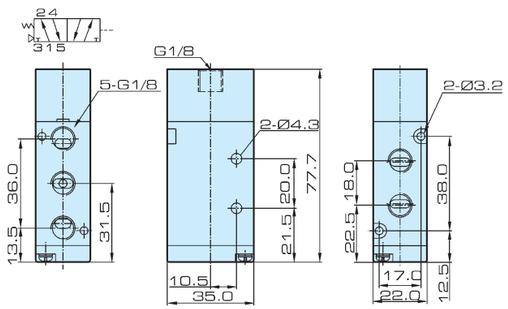

4A210-08

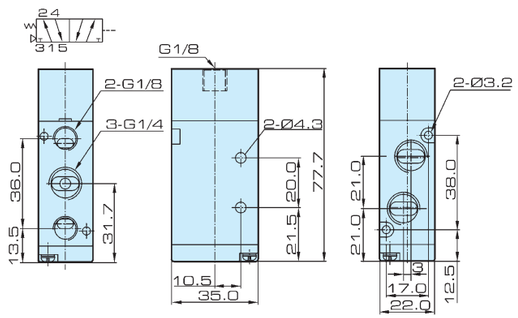

4A220-06

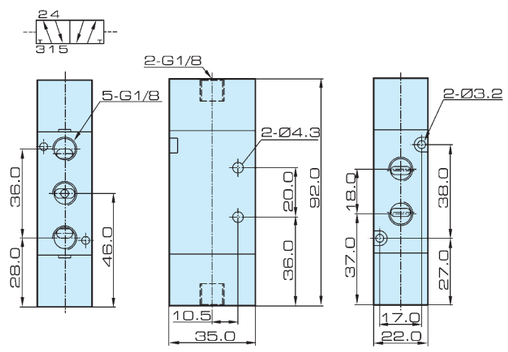

4A220-08

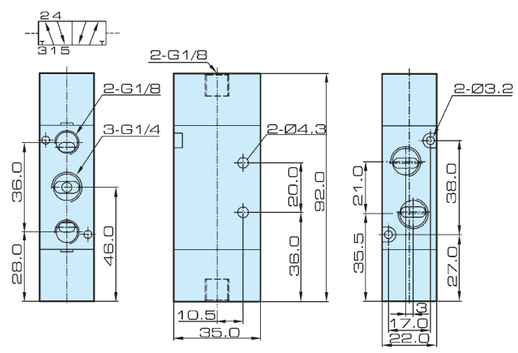

4A230-06

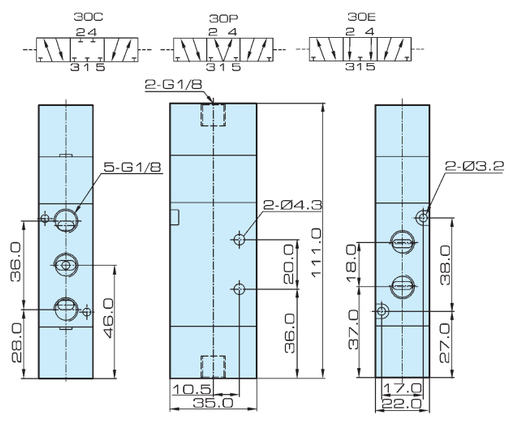

4A230-08

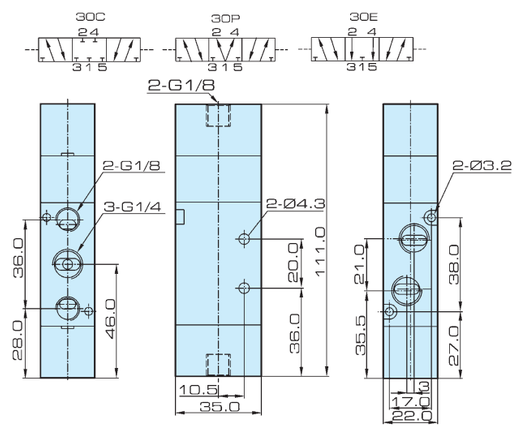

ISO9001:2008 CE

Overall Dimension

J3V210-06

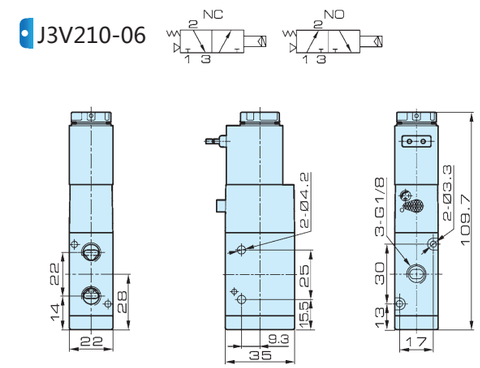

J3V210-06

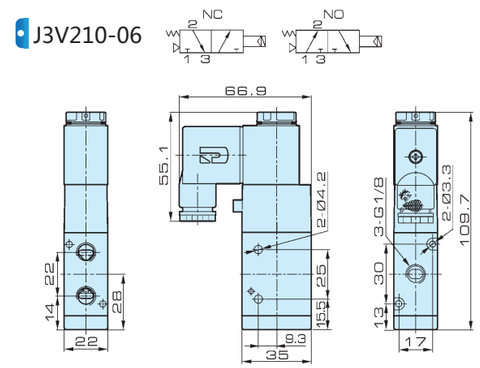

J3V220-06

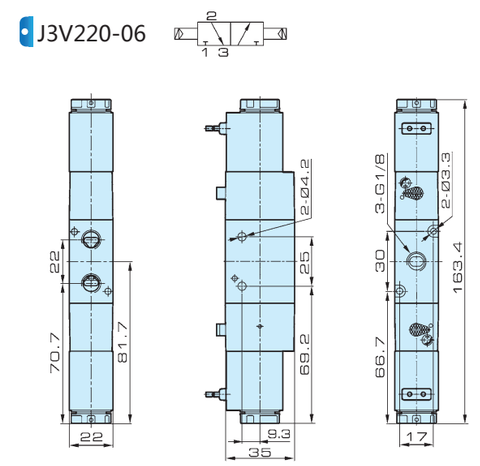

J3V220-06

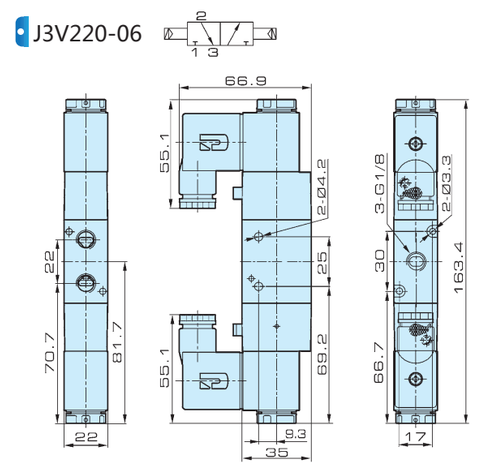

J3V210-08

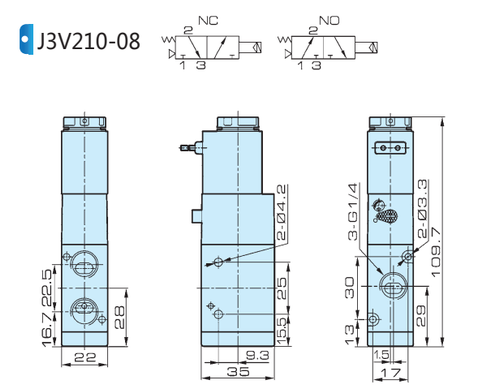

J3V210-08

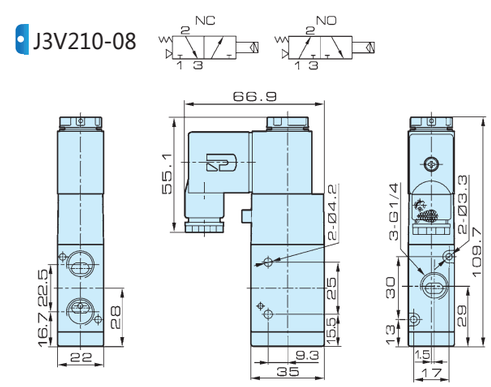

Valve
J4V100
J4V200
J4V300
J4V400
SV
5V100
5V200
5V300
5V400
Manifold
MCS
JVT307
JSY
5JV
JEL
MVSD
VF
BM
551
JEL10
3VJZF
Diaphragm
JELVD
JELMP
JELP/G
Coil
3V1
2P
2V
2W
2W(Big)
2L
VX
PU
PU225
2Q
JEL5404
JEL6213
BU
Pulse
JEL.JZF
4H
TSV
MPV
4HV
HV, K
4R
4F210
FV
MSV
JM
ASC, RE
QE, QEA
ST
HSV

JELPC — China Pneumatic

Overall Dimension

J3V220-08

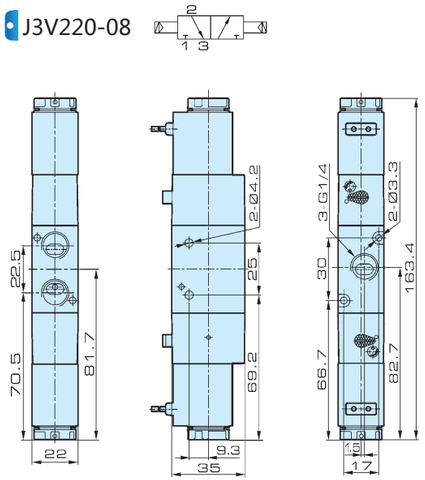

J3V220-08

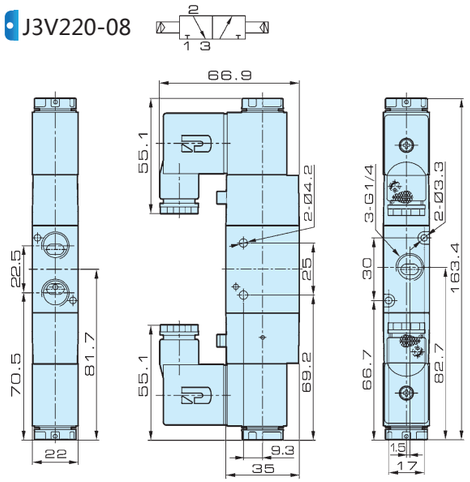

3A210-06

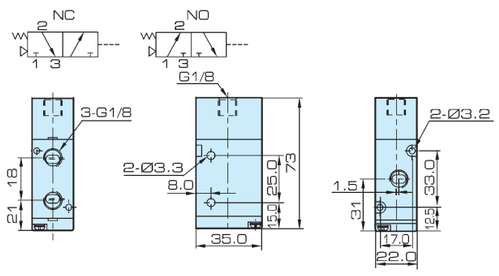

3A210-08

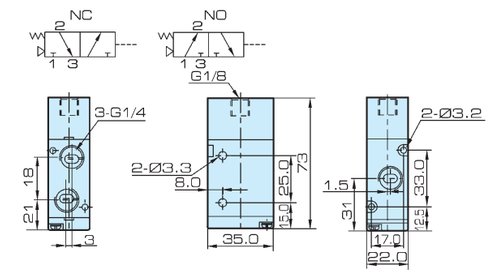

3A220-06

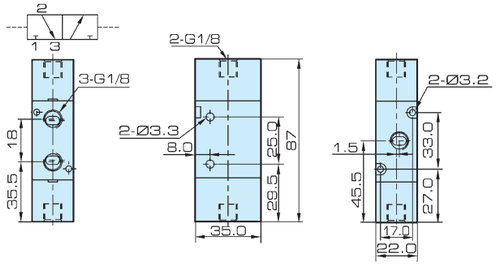

3A220-08

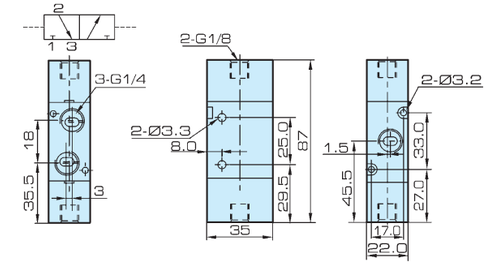

ISO9001:2008 CE

Features

1. Valve spool use seals which import from Japan to guarantee the life time and consistency.
2. To import German high standard special grease which provides film in order to reduce friction.
3. To import German soft magnetic stainless steel to improve the magnetic performance and reduce coil capacity 30%.
4. Piloted valve base use new design mould, with new visual style.

Ordering Code

J4V	-	3	-	10	-	10	-	B	-	AC220V	-	W	-	F
Specification		Series Code		Coil and Type		Port Size		Connection and Initial status		Standard Voltage		Wiring		Joint
J4V: 5/2 (3) way solenoid valve		3: 300 Series		10: Single coil		08: 1/4"		Blank: Threaded		DC12V DC24V		Blank: Without light terminal		1F-20F
4A: 5/2 (3) way air pilot valve				20: Double coil		10: 3/8"		B: Sub-plated mounted (for 5/2,5/3 way only)		AC24V 50Hz/60Hz		LD1: White with light terminal		
J3V: 3/2 way solenoid valve				30C: Mid-position closed				NC: 3/2 way normal close		AC110V 50Hz/60Hz		W: Lead wire		
3A: 3/2 way air pilot valve				30E: Mid-position exhausted				NO: 3/2 way normal open		AC220V 50Hz/60Hz				
				30P: Mid-position pressed						AC380V 50Hz/60Hz				

Specification

Model	J4V310-08	J4V320-08	J4V330C-08	J4V330E-08	J4V330P-08	J4V310-10	J4V320-10	J4V330C-10	J4V330E-10	J4V330P-10
	4A310-08	4A320-08	4A330C-08	4A330E-08	4A330P-08	4A310-10	4A320-10	4A330C-10	4A330E-10	4A330P-10
Valve Type	5/2 way		5/3 way			5/2 way		5/3 way		
Effective Cross Section Area	$25mm^2$(CV=1.40)		$18mm^2$(CV=1.00)			$30mm^2$(CV=1.68)		$18mm^2$(CV=1.00)		

Model	J3V310-08	J3V320-08	3A310-08	3A320-08	J3V310-10	J3V320-10	3A310-10	3A320-10
Valve Type	3/2 way							
Effective Cross Section Area	$25mm^2$(CV=1.40)				$30mm^2$(CV=1.68)			
Port Size	Inlet, Outlet, Exhaust Port = G 1/4"				Inlet, Outlet = G 3/8" Exhaust Port = G 1/4"			
Working Medium	40 Micron Filtered Air							
Operation	Internal piloted							
Working-pressure	0.15 ~ 0.8 MPa							
Max. Test Pressure	1.2 MPa							
Ambient Temperature	-20 ~ 70℃							
Operating Voltage Tolerance	± 10%							
Power Consumption	AC: 5.5VA DC: 4.8W							
Connector Protection	F Class, IP 65							
Wiring / Connector	Cable / Lead Wire or DIN Connector							
Switching Frequency	5 Cycles / Sec.							
Response Time	0.05 Sec.							

Valve
J4V100
J4V200
J4V300
J4V400
SV
5V100
5V200
5V300
5V400
Manifold
MCS
JVT307
JSY
5JV
JEL
MVSD
VF
BM
551
JEL10
3VJZF
Diaphragm
JELVD
JELMP
JELP/G
Coil
3V1
2P
2V
2W
2W(Big)
2L
VX
PU
PU225
2Q
JEL5404
JEL6213
BU
Pulse
JEL.JZF
4H
TSV
MPV
4HV
HV, K
4R
4F210
FV
MSV
JM
ASC, RE
QE, QEA
ST
HSV

JELPC® | JELPC — China Pneumatic

Internal Structure

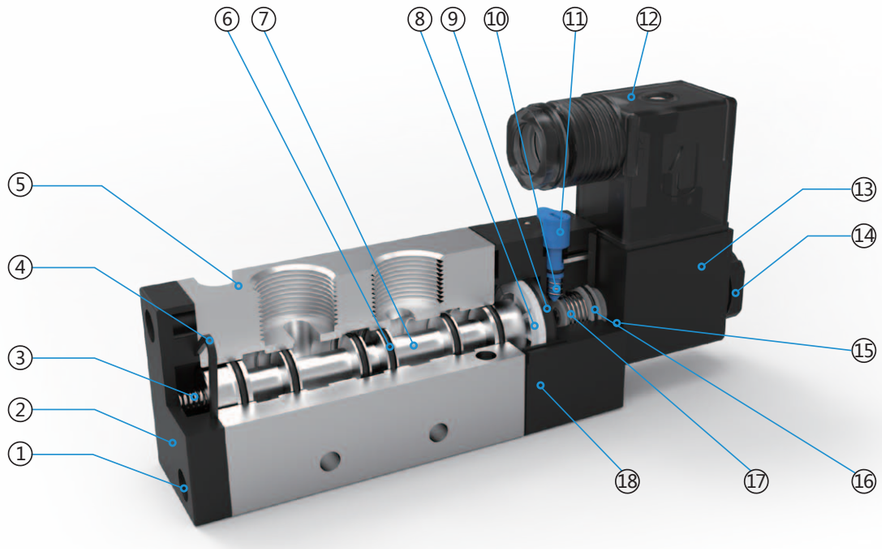

Parts

Number	Name	Number	Name	Number	Name
1	Cross slot pan screw	7	Valve spool	13	Coil
2	Back cover	8	Piston	14	Coil nut
3	Spring	9	Y ring	15	Connecting part
4	Anomalous seal	10	Spring	16	O ring
5	Valve body	11	Mannual ride spindle	17	Plunger
6	Flat ring	12	Terminal	18	Piloted valve base

Flow Chart

J4V310-08

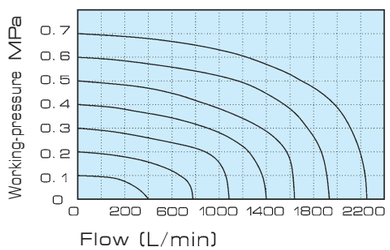

J4V310-10

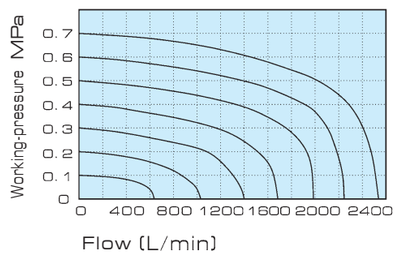

ISO9001:2008 CE

J4V300 Series
Solenoid Valve, Air Piloted Valve

Overall Dimension

J4V310-08

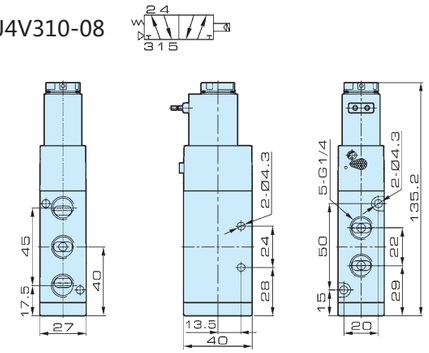

J4V310-08

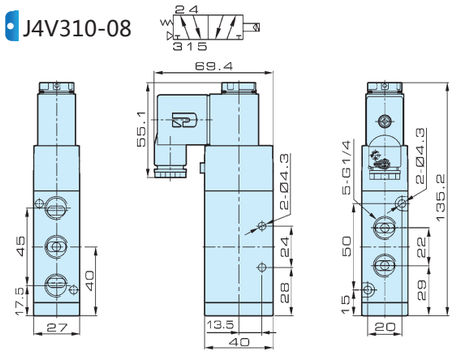

J4V320-08

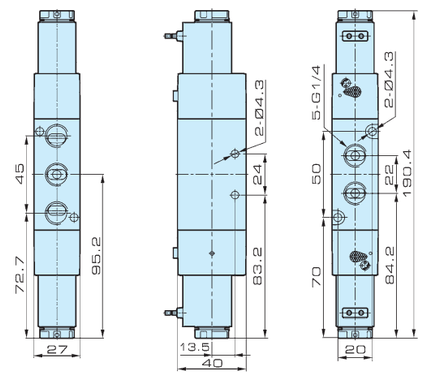

J4V320-08

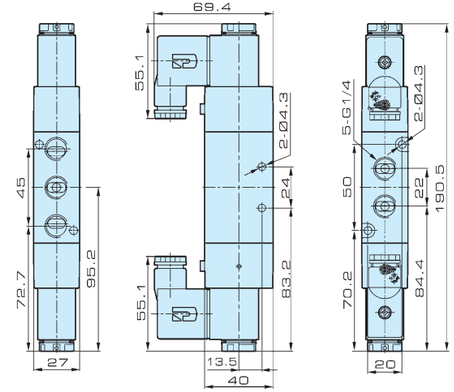

J4V330-08

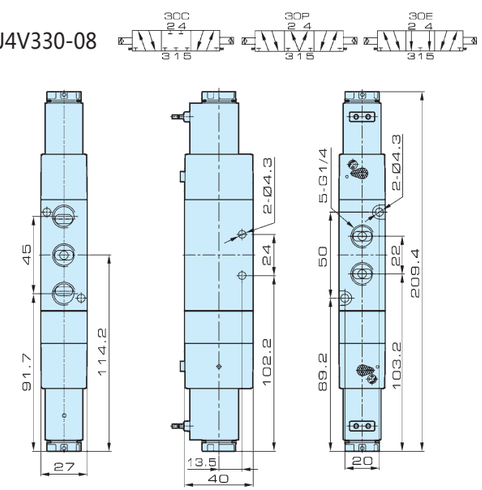

J4V330-08

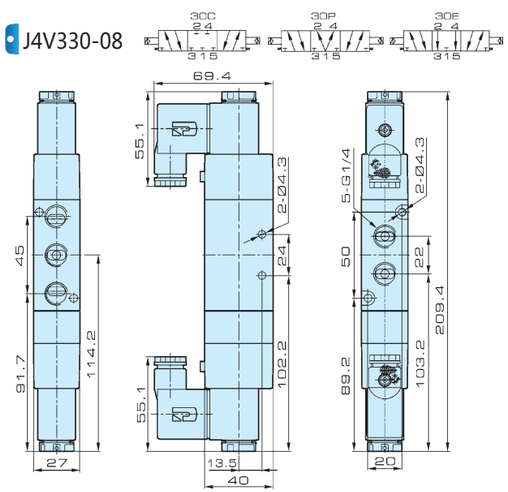

Valve
J4V100
J4V200
J4V300
J4V400
SV
5V100
5V200
5V300
5V400
Manifold
MCS
JVT307
JSY
5JV
JEL
MVSD
VF
BM
551
JEL10
3VJZF
Diaphragm
JELVD
JELMP
JELP/G
Coil
3V1
2P
2V
2W
2W(Big)
2L
VX
PU
PU225
2Q
JEL5404
JEL6213
BU
Pulse
JEL.JZF
4H
TSV
MPV
4HV
HV, K
4R
4F210
FV
MSV
JM
ASC, RE
QE, QEA
ST
HSV

JELPC® | JELPC — China Pneumatic

Overall Dimension

J4V310-10

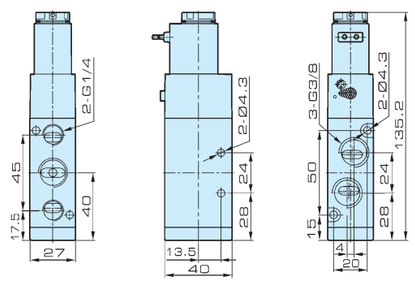

J4V310-10

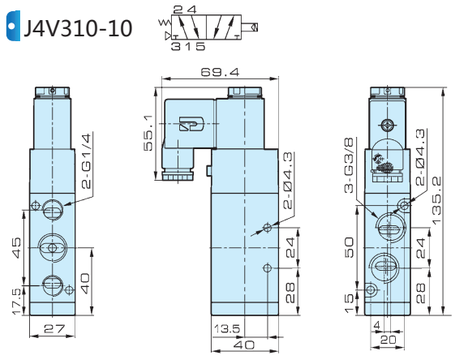

J4V320-10

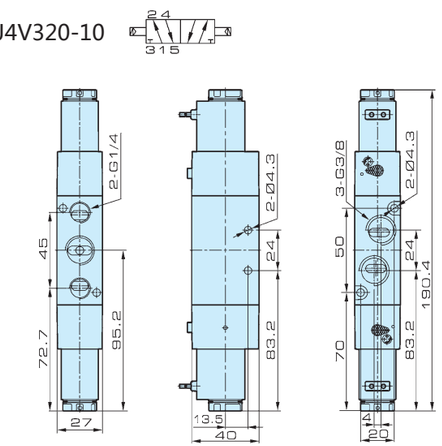

J4V320-10

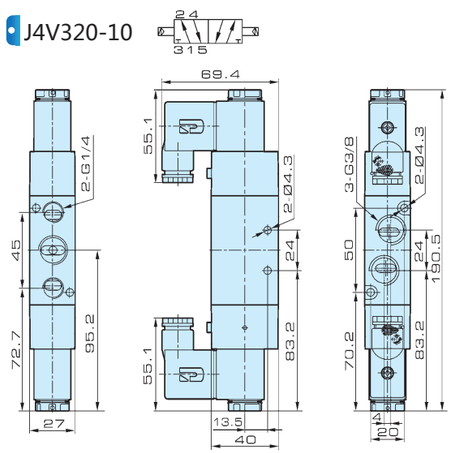

J4V330-10

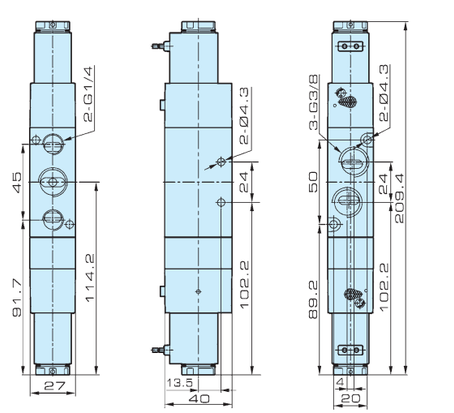

J4V330-10

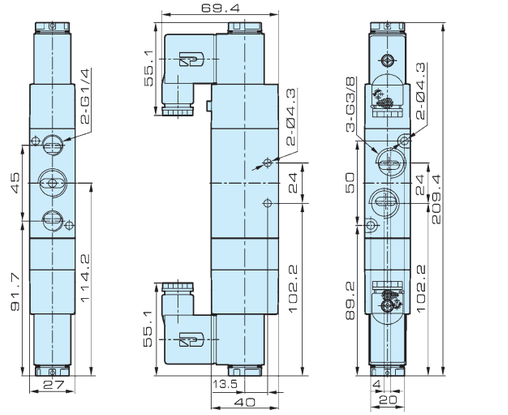

ISO9001:2008 CE

Overall Dimension

J4V310-08B

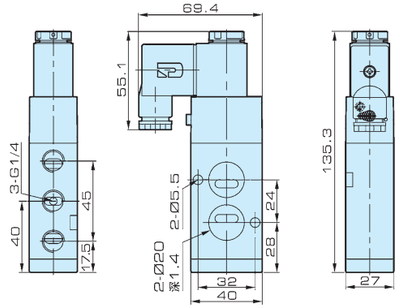

J4V310-10B

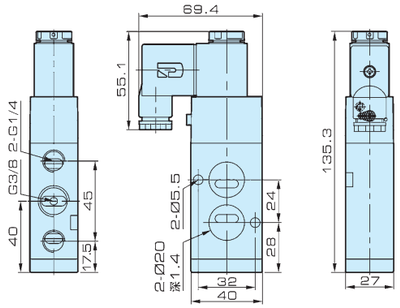

J4V320-08B

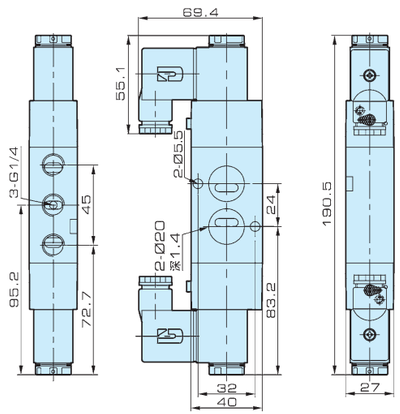

J4V320-10B

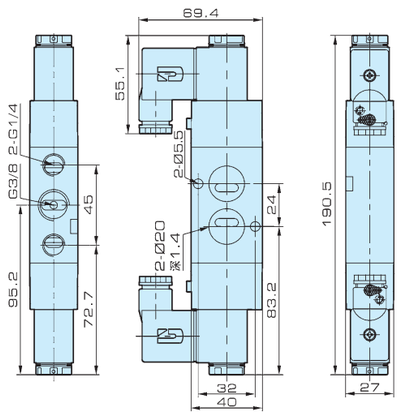

J4V330-08B

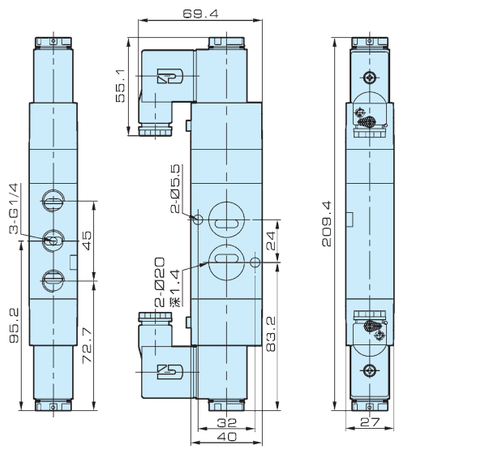

J4V330-10B

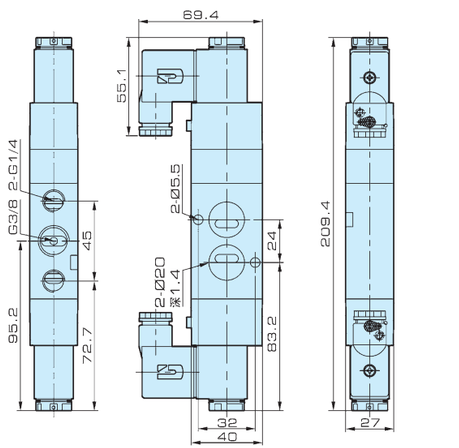

Valve
J4V100
J4V200
J4V300
J4V400
SV
5V100
5V200
5V300
5V400
Manifold
MCS
JVT307
JSY
5JV
JEL
MVSD
VF
BM
551
JEL10
3VJZF
Diaphragm
JELVD
JELMP
JELP/G
Coil
3V1
2P
2V
2W
2W(Big)
2L
VX
PU
PU225
2Q
JEL5404
JEL6213
BU
Pulse
JEL.JZF
4H
TSV
MPV
4HV
HV, K
4R
4F210
FV
MSV
JM
ASC, RE
QE, QEA
ST
HSV

JELPC® | JELPC — China Pneumatic

Overall Dimension

4A310-08

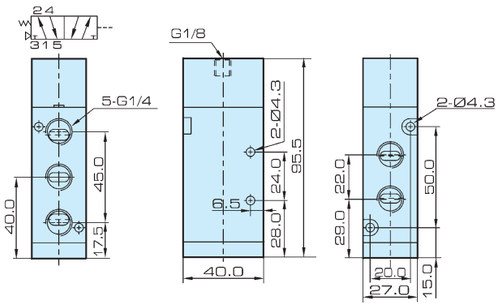

4A310-10

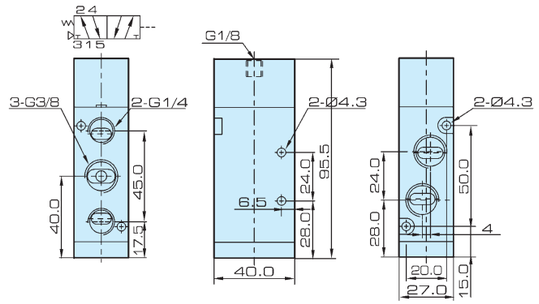

4A320-08

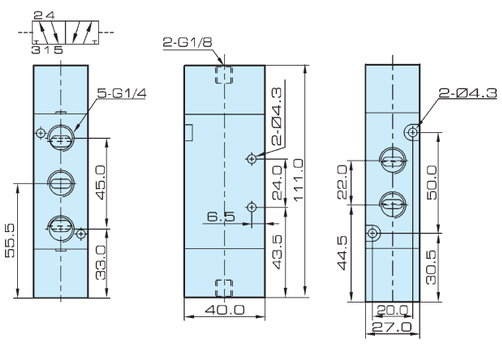

4A320-10

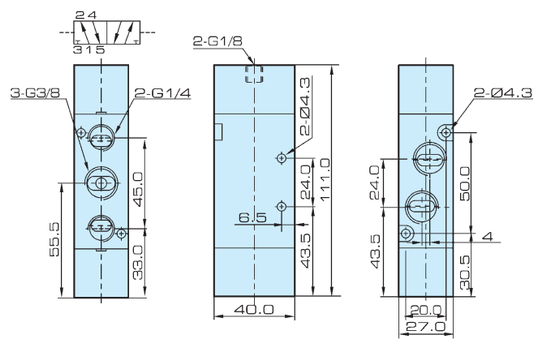

4A330-08

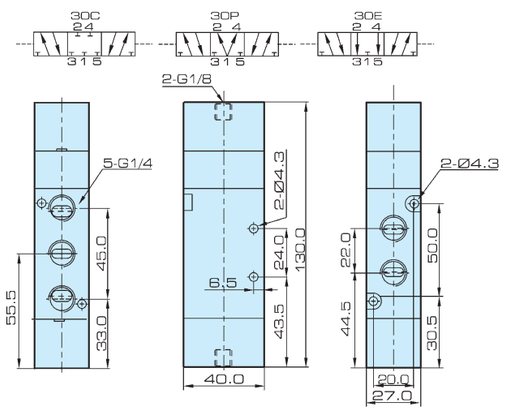

4A330-10

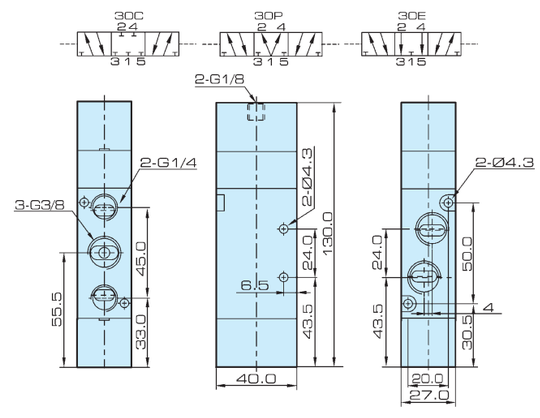

ISO9001:2008 CE

Overall Dimension

J3V310-08

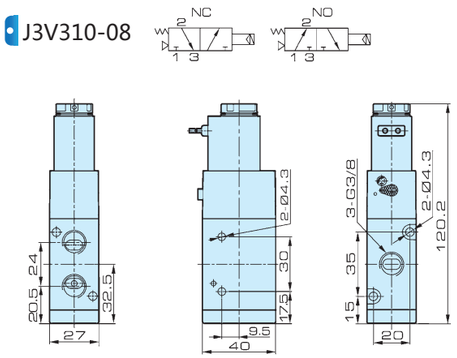

J3V310-08

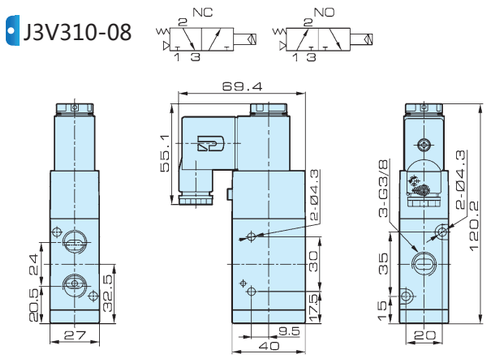

J3V320-08

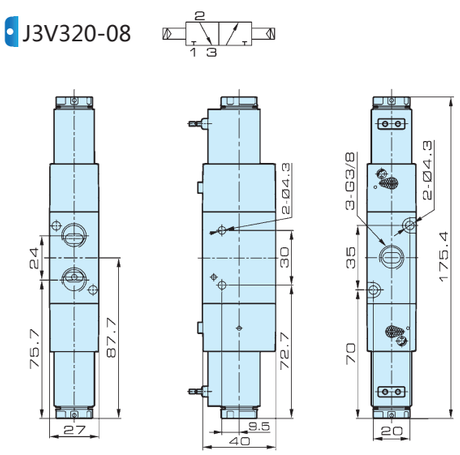

J3V320-08

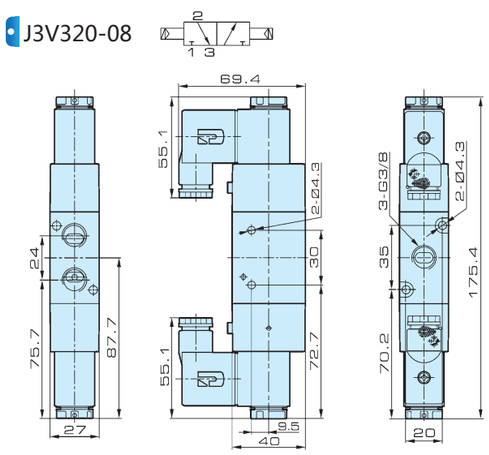

J3V310-10

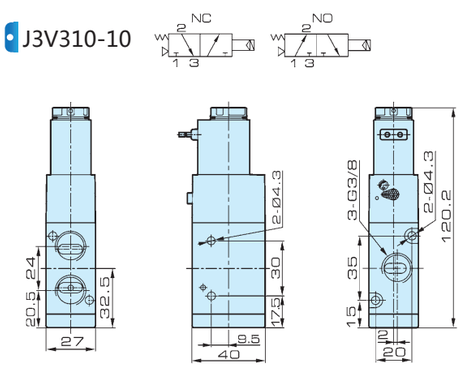

J3V310-10

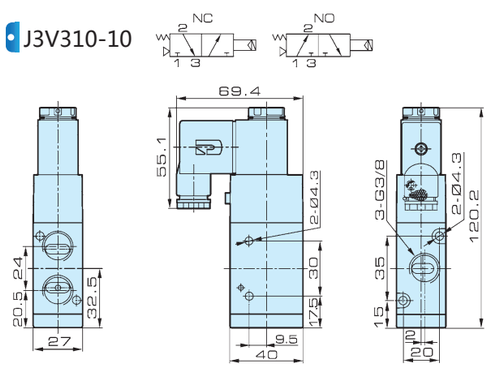

JELPC® | JELPC — China Pneumatic

Overall Dimension

J3V320-10

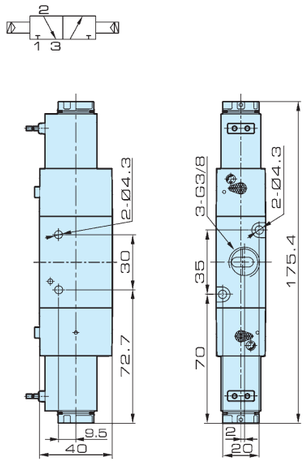

J3V320-10

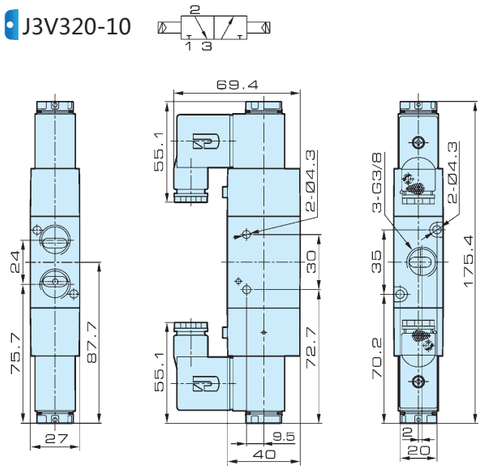

3A310-08

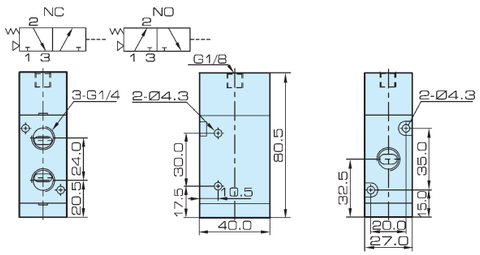

3A310-10

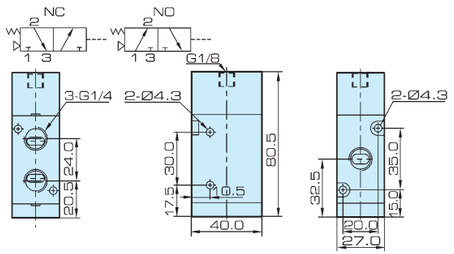

3A320-08

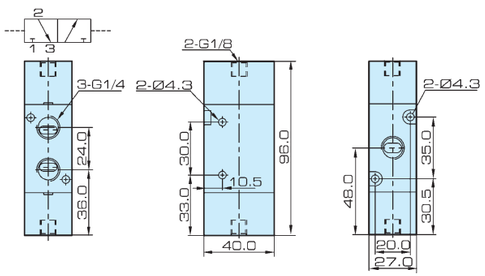

3A320-10

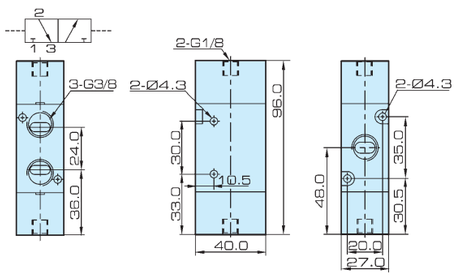

ISO9001:2008 CE

Features

1. Valve spool use seals which import from Japan to guarantee the life time and consistency.
2. To import German high standard special grease which provides film in order to reduce friction.
3. To import German soft magnetic stainless steel to improve the magnetic performance and reduce coil capacity 30%.
4. Piloted valve base use new design mould, with new visual style.

Ordering Code

J4V - 4 - 10 - 15 - B - AC220V - W - F

Specification	Series Code	Coil and Type	Port Size	Connection and Initial status	Standard Voltage	Wiring	Joint
J4V: 5/2 (3) way solenoid valve	4: 400 Series	10: Single coil	15: 1/2"	Blank: Threaded	DC12V DC24V	Blank: Without light terminal	1F-20F
4A: 5/2 (3) way air pilot valve		20: Double coil		B: Sub-plated mounted (for 5/2,5/3 way only)	AC24V 50Hz/60Hz	LD1: White with light terminal	
J3V: 3/2 way solenoid valve		30C: Mid-position closed		NC: 3/2 way normal close	AC110V 50Hz/60Hz	W: Lead wire	
3A: 3/2 way air pilot valve		30E: Mid-position exhausted		NO: 3/2 way normal open	AC220V 50Hz/60Hz		
		30P: Mid-position pressed			AC380V 50Hz/60Hz		

Specification

Model	4V410-15 / 4A410-15	4V420-15 / 4A420-15	4V430C-15 / 4A430C-15	4V430E-15 / 4A430E-15	4V430P-15 / 4A430P-15
Valve Type	5/2 Way		5/3 Way		
Effective Cross Section Area	50 mm² (CV=2.79)		30 mm² (CV=1.68)		

Model	3V410-15	3V420-15	3A410-15	3A420-15
Valve Type	3/2 Way			
Effective Cross Section Area	50mm² (CV=2.79)			
Port Size	Inlet, Outlet, Exhaust Port = G1/2"			
Working Medium	40 Micron Filtered Air			
Operation	Internal piloted			
Working-pressure	0.15 ~ 0.8 MPa			
Max. Test Pressure	1.2 MPa			
Ambient Temperature	-20 ~ 70℃			
Operating Voltage Tolerance	±10%			
Power Consumption	AC: 5.5VA DC: 4.8W			
Connector Protection	F Class, IP 65			
Wiring / Connector	Cable / Lead Wire or DIN Connector			
Switching Frequency	5 Cycles / Sec.			
Response Time	0.05 Sec.			

Valve
J4V100
J4V200
J4V300
J4V400
SV
5V100
5V200
5V300
5V400
Manifold
MCS
JVT307
JSY
5JV
JEL
MVSD
VF
BM
551
JEL10
3VJZF
Diaphragm
JELVD
JELMP
JELP/G
Coil
3V1
2P
2V
2W
2W(Big)
2L
VX
PU
PU225
2Q
JEL5404
JEL6213
BU
Pulse
JEL.JZF
4H
TSV
MPV
4HV
HV, K
4R
4F210
FV
MSV
JM
ASC, RE
QE, QEA
ST
HSV

JELPC® | JELPC — China Pneumatic

Valve
J4V100
J4V200
J4V300
J4V400
SV
5V100
5V200
5V300
5V400
Manifold
MCS
JVT307
JSY
5JV
JEL
MVSD
VF
BM
551
JEL10
3VJZF
Diaphragm
JELVD
JELMP
JELP/G
Coil
3V1
2P
2V
2W
2W(Big)
2L
VX
PU
PU225
2Q
JEL5404
JEL6213
BU
Pulse
JEL.JZF
4H
TSV
MPV
4HV
HV, K
4R
4F210
FV
MSV
JM
ASC, RE
QE, QEA
ST
HSV

Internal Structure

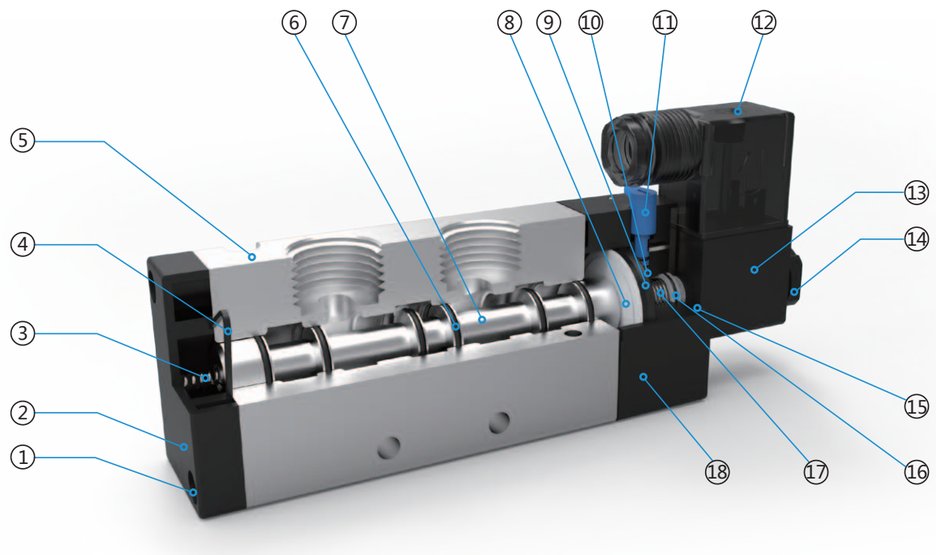

Parts

Number	Name	Number	Name	Number	Name
1	Cross slot pan screw	7	Valve spool	13	Coil
2	Back cover	8	Piston	14	Coil nut
3	Spring	9	Y ring	15	Connecting part
4	Anomalous seal	10	Spring	16	O ring
5	Valve body	11	Mannual ride spindle	17	Plunger
6	Flat ring	12	Terminal	18	Piloted valve base

Flow Chart

J4V410-15

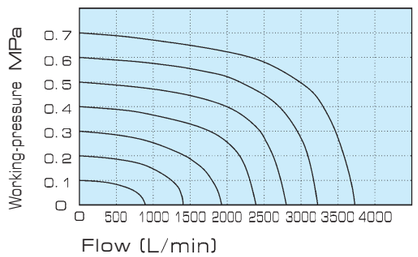

J4V400 Series
Solenoid Valve, Air Piloted Valve

Overall Dimension

J4V410-15

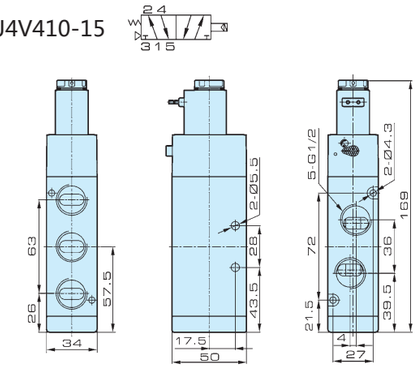

J4V410-15

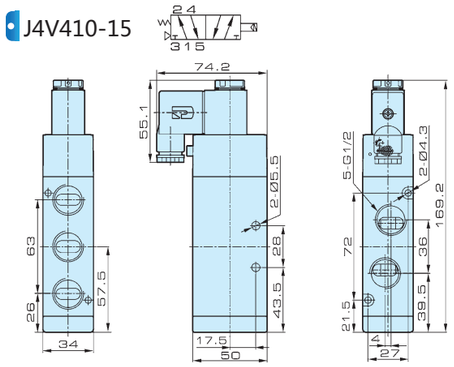

J4V420-15

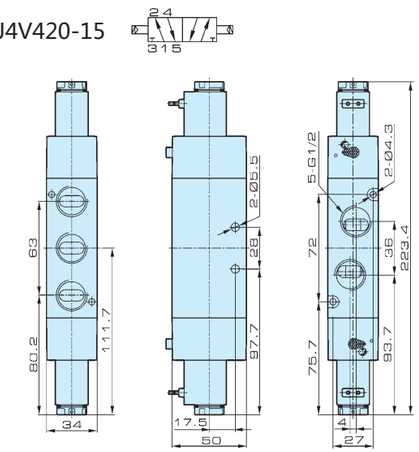

J4V420-15

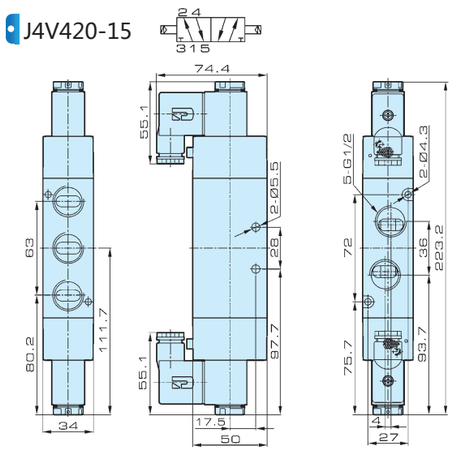

J4V430-15

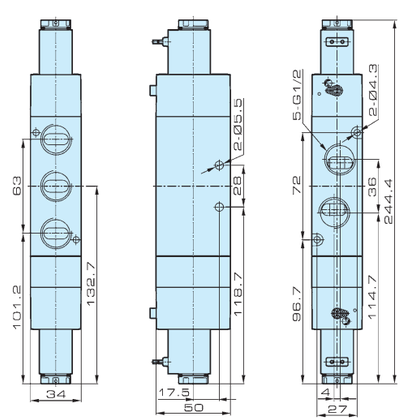

J4V430-15

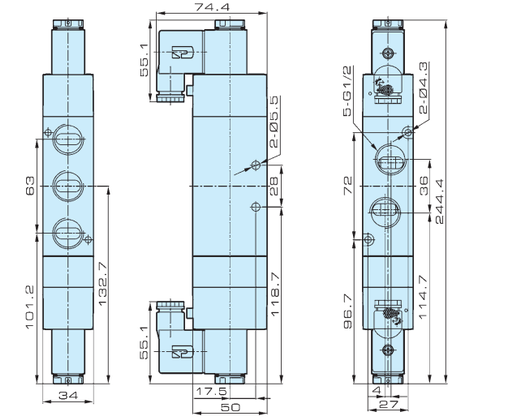

Valve
J4V100
J4V200
J4V300
J4V400
SV
5V100
5V200
5V300
5V400
Manifold
MCS
JVT307
JSY
5JV
JEL
MVSD
VF
BM
551
JEL10
3VJZF
Diaphragm
JELVD
JELMP
JELP/G
Coil
3V1
2P
2V
2W
2W(Big)
2L
VX
PU
PU225
2Q
JEL5404
JEL6213
BU
Pulse
JEL.JZF
4H
TSV
MPV
4HV
HV, K
4R
4F210
FV
MSV
JM
ASC, RE
QE, QEA
ST
HSV

JELPC® | JELPC — China Pneumatic

Overall Dimension

J4V410-15B

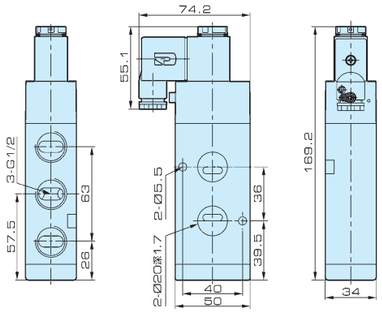

J4V420-15B

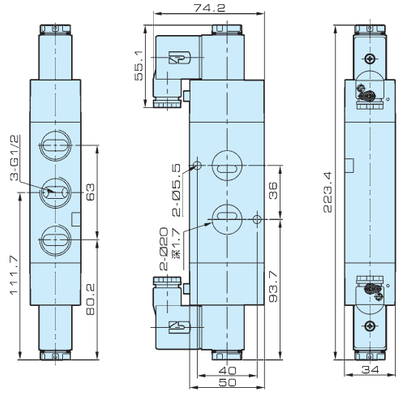

J4V430-15B

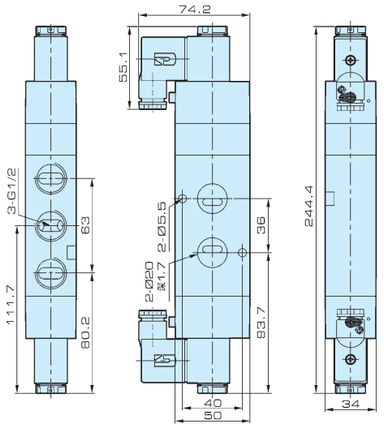

4A410-15

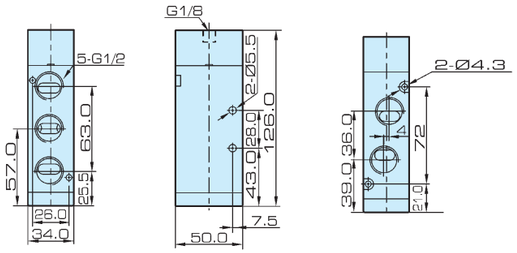

4A420-15

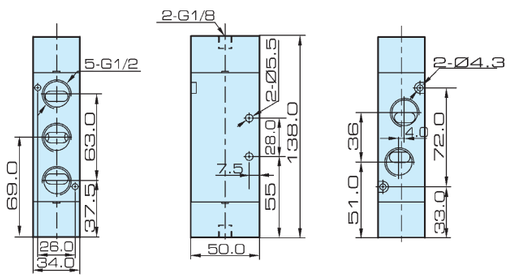

4A430-15

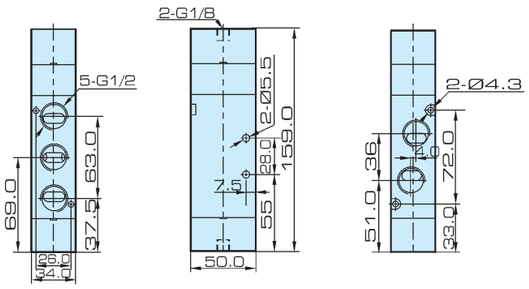

ISO9001:2008 CE

Overall Dimension

J3V410-15

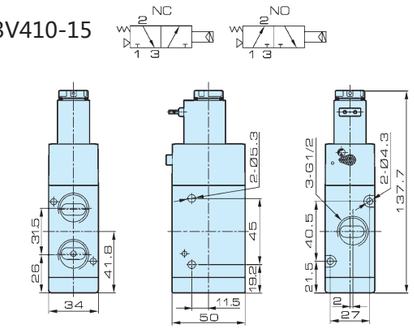

J3V410-15

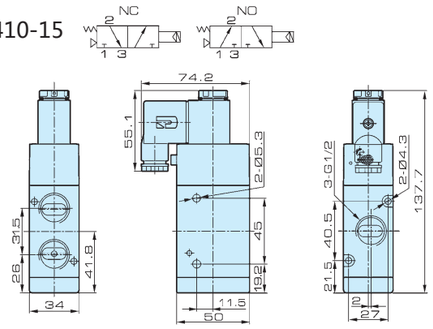

J3V420-15

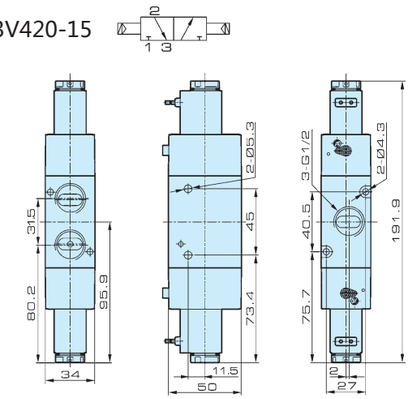

J3V420-15

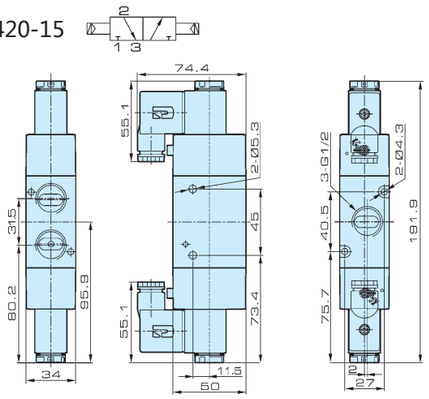

3A410-15

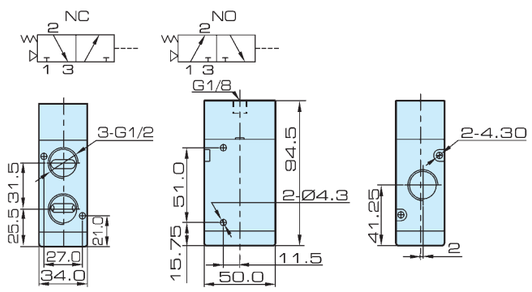

3A420-15

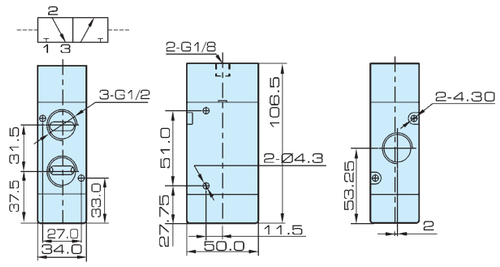

Valve
J4V100
J4V200
J4V300
J4V400
SV
5V100
5V200
5V300
5V400
Manifold
MCS
JVT307
JSY
5JV
JEL
MVSD
VF
BM
551
JEL10
3VJZF
Diaphragm
JELVD
JELMP
JELP/G
Coil
3V1
2P
2V
2W
2W(Big)
2L
VX
PU
PU225
2Q
JEL5404
JEL6213
BU
Pulse
JEL.JZF
4H
TSV
MPV
4HV
HV, K
4R
4F210
FV
MSV
JM
ASC, RE
QE, QEA
ST
HSV

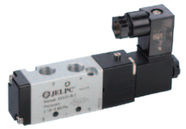
SV521-S-1

SV523-S-3

SV522-S-2

SV524-S-4

Features

1. Adopt the armature same as the new design of 5V series, bring down the working power, reduce the temperature of coil, the working temperature only rise 35~40 for single valve using.
2. Adopt the same piston seals of 5V, improve the life time.
3. Adopt Germany KLUBER AR34-402 lubricating oil, reduce the coefficient of static friction.
4. Adopt 5V mould of pilot seat , without any return material of plastic, improve the strength of the pilot seat.
5. Strengthen the structure of the manual rod and coil nut, can effectively avoid manual lever fracture and nut slipping condition.
6. Using the same terminal connector with the 5V series , avoid the possibility of bad contract or burned out.

Ordering Code

SV	-	52	-	2	-	S	-	2	-	AC220V	-	W
Specification		Position and Way		Width of Valve Body		Coil and Position		Port Size		Working Voltage		Wiring Form
		52: 5/2 way		1: 18mm series		S: Single coil		1: G1/8"		DC12V		Blank: Brown with light terminal
		53: 5/3 way		2: 22mm series		D: Double coil		2: G1/4"		DC24V		W: Lead wire
		32: 3/2 way		3: 27mm series		C: Mid-position closed		3: G3/8"		AC110V 50Hz/60Hz		
				4: 34mm series		E: Mid-position exhausted		4: G1/2"		AC220V 50Hz/60Hz		
						P: Mid-position pressed						

▲ The specification of SV series solenoid valve, pls reference 5V series.

Valve
J4V100
J4V200
J4V300
J4V400
SV
5V100
5V200
5V300
5V400
Manifold
MCS
JVT307
JSY
5JV
JEL
MVSD
VF
BM
551
JEL10
3VJZF
Diaphragm
JELVD
JELMP
JELP/G
Coil
3V1
2P
2V
2W
2W(Big)
2L
VX
PU
PU225
2Q
JEL5404
JEL6213
BU
Pulse
JEL.JZF
4H
TSV
MPV
4HV
HV, K
4R
4F210
FV
MSV
JM
ASC, RE
QE, QEA
ST
HSV

Internal Structure

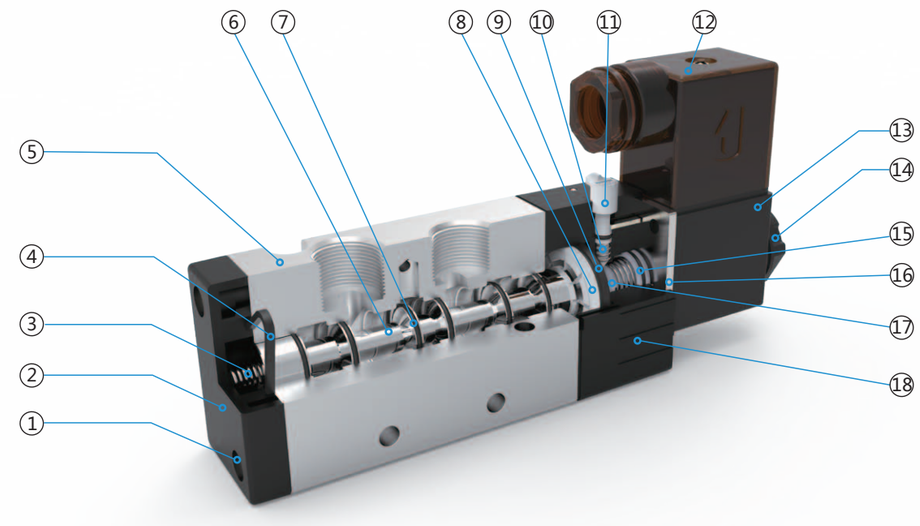

Parts

Number	Name	Number	Name	Number	Name
1	Cross slot pan screw	7	Flat ring	13	Coil
2	Back cover	8	Piston	14	Coil nut
3	Spring	9	Y ring	15	O ring
4	Anomalous seal	10	Spring	16	Connecting part
5	Valve body	11	Mannual ride spindle	17	Plunger
6	Valve spool	12	Terminal	18	Piloted valve base

▲ The Flow Chart of SV series solenoid valve, pls reference 5V series.

JELPC® | JELPC — China Pneumatic

5V100 Series
Solenoid Valve / Air piloted Valve

Valve
J4V100
J4V200
J4V300
J4V400
SV
5V100
5V200
5V300
5V400
Manifold
MCS
JVT307
JSY
5JV
JEL
MVSD
VF
BM
551
JEL10
3VJZF
Diaphragm
JELVD
JELMP
JELP/G
Coil
3V1
2P
2V
2W
2W(Big)
2L
VX
PU
PU225
2Q
JEL5404
JEL6213
BU
Pulse
JEL.JZF
4H
TSV
MPV
4HV
HV, K
4R
4F210
FV
MSV
JM
ASC, RE
QE, QEA
ST
HSV

Own Independent
Intellectual Property Rights

APPL:
2013303668314.7

5V110-06-S

5V110-06-F

5V120-06

5V130C-06

Features

1. Single solenoid valve uses new design with piston reset and improve steadiness, functionality and life time.
2. We guarantee inner hole with Ra0.1 roughness within our new processing.
3. Special treatment to take care of inner hole reduce the resistence.
4. Valve spool adding anti-friction seal to improve the stability movement to increase the life time.
5. For our manufacturing process we use imported HNBR to reduce friction.
6. To import German high standard special grease which provides film in order to reduce friction.
7. To introduce Taiwan high precise injection mould and seals die, to enhance precision and stability.
8. New visual style, synchronized with global outstanding product standard.
9. Adding the logo on behalf of the company innovation for individual market recognition on the product which has design patent.

Ordering Code

5V	1	10	06	B	F	AC220V	W	F
Specification	Series Code	Coil and Position	Port Size	Connection and Initial status	Reset form and color	Standard Voltage	Wiring	Joint
5V:2(3) way solenoid valve	100 Series	10: Single coil 5/2 way	M5:M5×0.8	Blank: Threaded	Blank: Air reset (red front and back cover)	DC12V	Blank:Brown with light terminal	1F-20F
5A:2(3) way air pilot valve		20: Double coil 5/2 way	06:1/8"	B: Namur	F: Air reset (black front and backcover)	DC24V	LD1:White with light terminal	
		30C: Double coils 5/3 way-closed			S: Spring reset (black front and back cover)	AC24V	W:Lead wire	
		30E: Double coils 5/3 way-exhausted			**(*Note)**	AC110V		
		30P: Double coils 5/3 way-pressed				AC220V		

***Note: 1. Red and black colour is available for option.**
2. Only black colour is available for spring reset products.
3. Only black colour and spring reset is available for 310, 410 series single coil valve.

Specification

Model	5V110-M5	5V120-M5	5V130C-M5	5V130E-M5	5V130P-M5	5V110-06	5V120-06	5V130C-06	5V130E-06	5V130P-06
	5A110-M5	5A120-M5	5A130C-M5	5A130E-M5	5A130P-M5	5A110-06	5A120-06	5A130C-06	5A130E-06	5A130P-06
Valve Type	5/2 way		5/3 way			5/2 way		5/3 way		
Effective Cross Section Area	10 mm^2 (CV = 0.56)		7 mm^2 (CV = 0.40)			12 mm^2 (CV = 0.67)		9 mm^2 (CV = 0.5)		
Port Size	Inlet, Outlet, Exhaust Port = M5 × 0.8					Inlet, Outlet, Exhaust Port = G 1/8"				
Working Medium	40 Micron Filtered Air									
Operation	Internal piloted									
Working-pressure	0.15～0.8 MPa									
Max. Test Pressure	1.2 MPa									
Ambient Temperature	-20～70 ℃									
Operating Voltage Tolerance	DC: ± 10% AC: ± 15%									
Power Consumption	AC: 2.5 VA DC: 2.5 W									
Connector Protection	F Class, IP 65									
Wiring / Connector	Cable / Lead Wire or DIN Connector									
Switching Frequency	5 Cycles / Sec.									
Response Time	0.05 Sec.									

Internal Structure

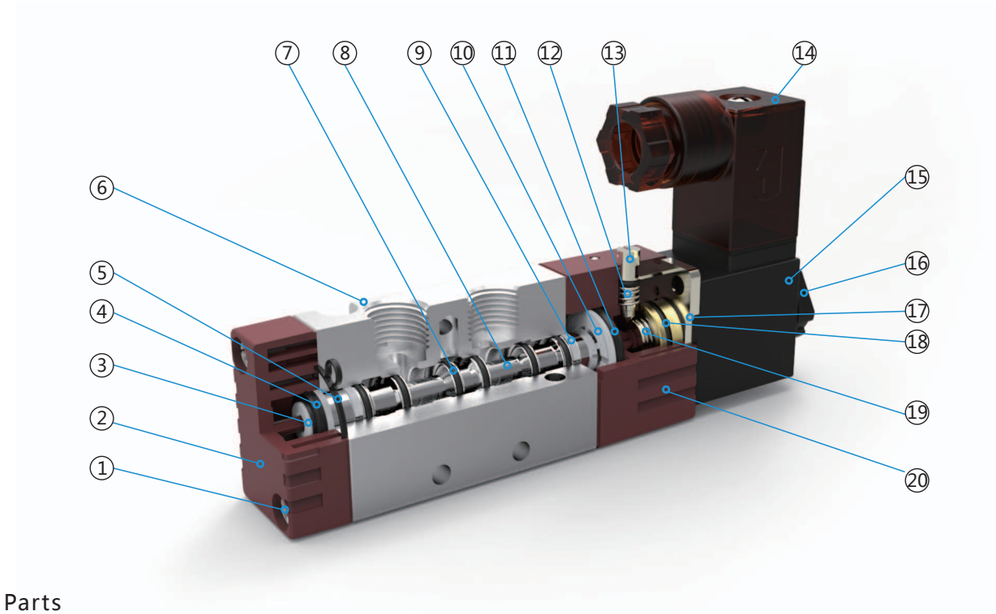

Parts

Number	Name	Number	Name	Number	Name
1	Cross slot pan screw	8	Valve spool	15	Coil
2	Back cover	9	Anti-friction seal	16	Coil nut
3	Piston	10	Piston	17	Connecting part
4	Y ring	11	Y ring	18	O ring
5	Anomalous seal	12	Spring	19	Plunger
6	Valve body	13	Mannual ride spindle	20	Piloted valve base
7	Flat ring	14	Terminal		

Flow Chart

5V110-M5

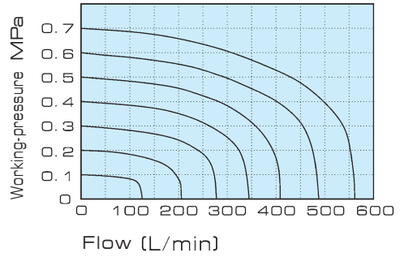

5V110-06

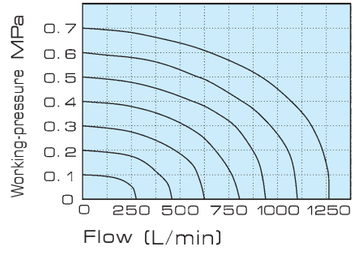

JELPC® | JELPC — China Pneumatic

Overall Dimension

5V110-M5

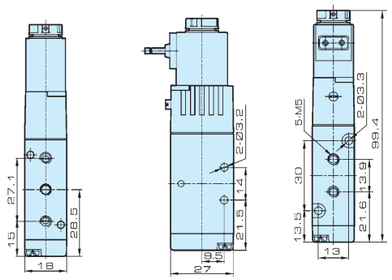

5V110-M5

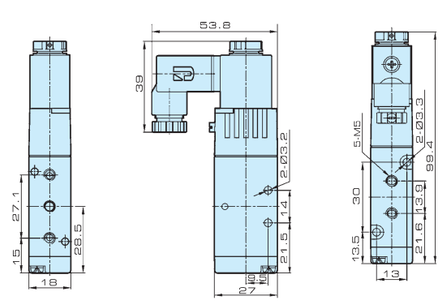

5V120-M5

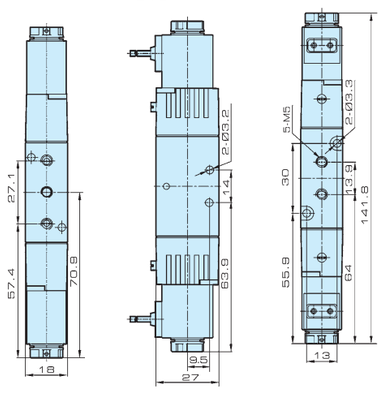

5V120-M5

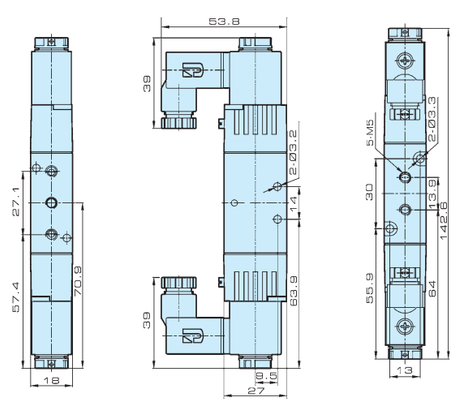

5V130-M5

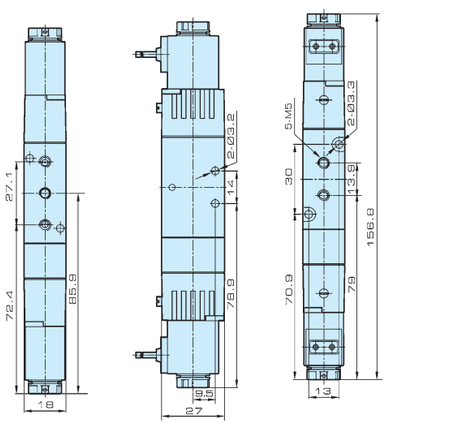

5V130-M5

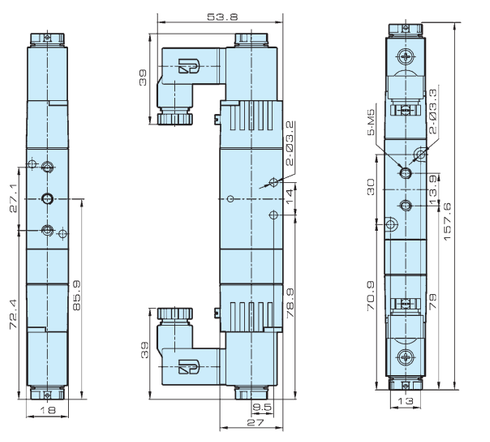

Overall Dimension

5V110-06

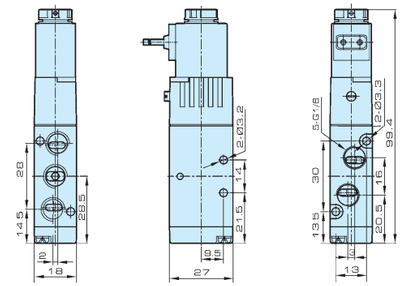

5V110-06

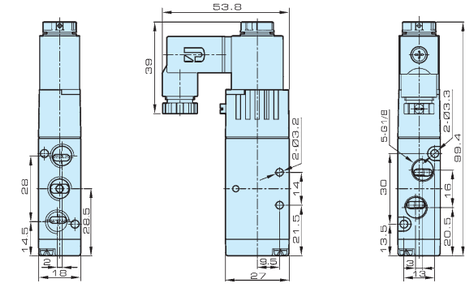

5V120-06

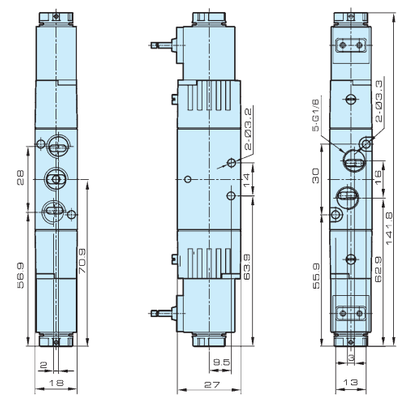

5V120-06

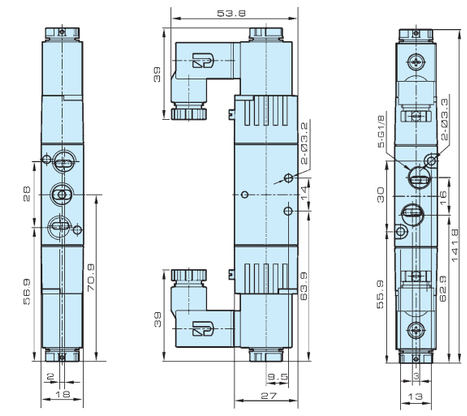

5V130-06

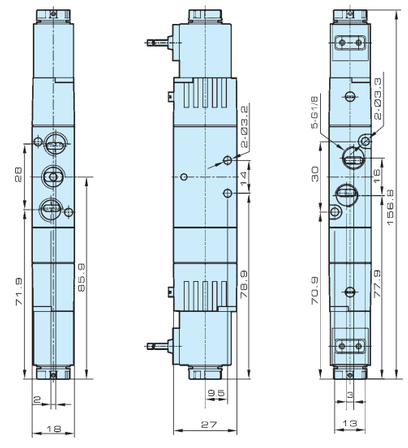

5V130-06

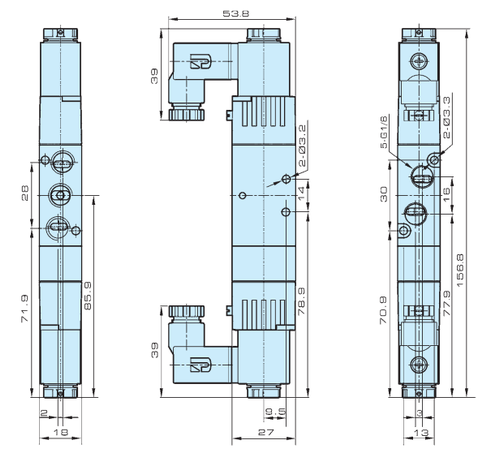

Valve
J4V100
J4V200
J4V300
J4V400
SV
5V100
5V200
5V300
5V400
Manifold
MCS
JVT307
JSY
5JV
JEL
MVSD
VF
BM
551
JEL10
3VJZF
Diaphragm
JELVD
JELMP
JELP/G
Coil
3V1
2P
2V
2W
2W(Big)
2L
VX
PU
PU225
2Q
JEL5404
JEL6213
BU
Pulse
JEL.JZF
4H
TSV
MPV
4HV
HV, K
4R
4F210
FV
MSV
JM
ASC, RE
QE, QEA
ST
HSV

JELPC® | JELPC — China Pneumatic

Own Independent
Intellectual Property Rights

APPL:
2013303668314.7

5V210-08-S

5V210-08-F

5V220-08

5V230C-08

Features

1. Single solenoid valve uses new design with piston reset and improve steadiness, functionality and life time.
2. We guarantee inner hole with Ra0.1 roughness within our new processing.
3. Special treatment to take care of inner hole reduce the resistence.
4. Valve spool adding anti-friction seal to improve the stability movement to increase the life time.
5. For our manufacturing process we use imported HNBR to reduce friction.
6. To import German high standard special grease which provides film in order to reduce friction.
7. To introduce Taiwan high precise injection mould and seals die, to enhance precision and stability.
8. New visual style, synchronized with global outstanding product standard.
9. Adding the logo on behalf of the company innovation for individual market recognition on the product which has design patent.

Ordering Code

5V	-	2	-	10	-	08	-	B	-	F	-	AC220V	-	W	-	F
Specification		Series Code		Coil and Position		Port Size		Connection and Initial status		Reset form and color		Standard Voltage		Wiring		Joint
5V:2(3) way solenoid valve		200 Series		10: Single coil 5/2 way		06: 1/8"		Blank: Threaded		Blank: Air reset (red front and back cover)		DC12V		Blank:Brown with light terminal		1F-20F
5A:2(3) way air pilot valve				20: Double coil 5/2 way		08: 1/4"		B: Namur		F: Air reset (black front and backcover)		DC24V		LD1:White with light terminal		
				30C: Double coils 5/3 way-closed						S: Spring reset (black front and back cover)		AC24V		W:Lead wire		
				30E: Double coils 5/3 way-exhausted						(*Note)		AC110V				
				30P: Double coils 5/3 way-pressed								AC220V				

***Note: 1. Red and black colour is available for option.**
2. Only black colour is available for spring reset products.
3. Only black colour and spring reset is available for 310, 410 series single coil valve.

Specification

Model	5V210-06	5V220-06	5V230C-06	5V230E-06	5V230P-06	5V210-08	5V220-08	5V230C-08	5V230E-08	5V230P-08
	5A210-06	5A220-06	5A230C-06	5A230E-06	5A230P-06	5A210-08	5A220-08	5A230C-08	5A230E-08	5A230P-08
Valve Type	5/2 way		5/3 way			5/2 way		5/3 way		
Effective Cross Section Area	14 mm^2 (CV=0.78)		12 mm^2 (CV=0.67)			16 mm^2 (CV=0.89)		12 mm^2 (CV=0.67)		
Port Size	Inlet, Outlet, Exhaust Port = G 1/8"					Inlet, Outlet = G 1/4", Exhaust Port = G 1/8"				
Working Medium	40 Micron Filtered Air									
Operation	Internal piloted									
Working-pressure	0.15 ~ 0.8 MPa									
Max. Test Pressure	1.2 MPa									
Ambient Temperature	-20 ~ 70 ℃									
Operating Voltage Tolerance	DC: ± 10% AC: ± 15%									
Power Consumption	AC: 3.5 VA DC: 3.0 W									
Connector Protection	F Class, IP 65									
Wiring / Connector	Cable / Lead Wire or DIN Connector									
Switching Frequency	5 Cycles / Sec.									
Response Time	0.05 Sec.									

ISO9001:2008 CE

Internal Structure

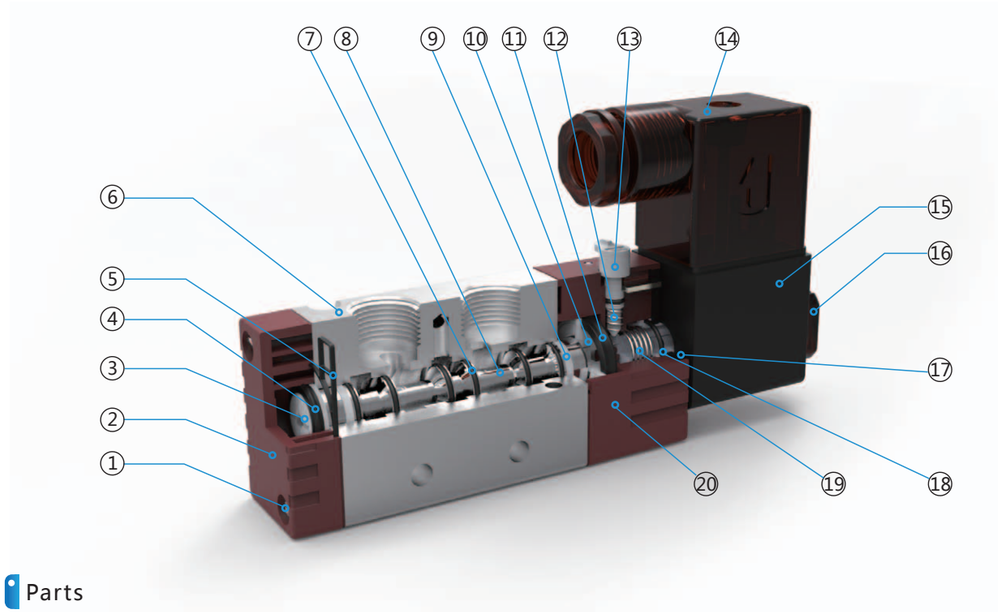

Parts

Number	Name	Number	Name	Number	Name
1	Cross slot pan screw	8	Valve spool	15	Coil
2	Back cover	9	Anti-friction seal	16	Coil nut
3	Piston	10	Piston	17	Connecting part
4	Y ring	11	Y ring	18	O ring
5	Anomalous seal	12	Spring	19	Plunger
6	Valve body	13	Mannual ride spindle	20	Piloted valve base
7	Flat ring	14	Terminal		

Flow Chart

5V210-06

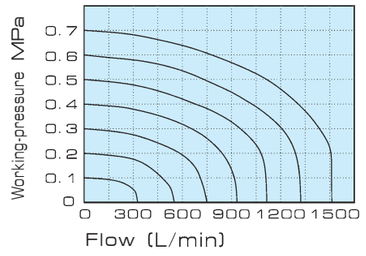

5V210-08

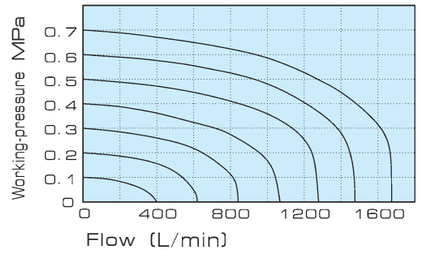

Valve
J4V100
J4V200
J4V300
J4V400
SV
5V100
5V200
5V300
5V400
Manifold
MCS
JVT307
JSY
5JV
JEL
MVSD
VF
BM
551
JEL10
3VJZF
Diaphragm
JELVD
JELMP
JELP/G
Coil
3V1
2P
2V
2W
2W(Big)
2L
VX
PU
PU225
2Q
JEL5404
JEL6213
BU
Pulse
JEL.JZF
4H
TSV
MPV
4HV
HV, K
4R
4F210
FV
MSV
JM
ASC, RE
QE, QEA
ST
HSV

JELPC® | JELPC — China Pneumatic

ISO9001:2008 CE

5V200 Series
Solenoid Valve / Air piloted Valve

Valve
J4V100
J4V200
J4V300
J4V400
SV
5V100
5V200
5V300
5V400
Manifold
MCS
JVT307
JSY
5JV
JEL
MVSD
VF
BM
551
JEL10
3VJZF
Diaphragm
JELVD
JELMP
JELP/G
Coil
3V1
2P
2V
2W
2W(Big)
2L
VX
PU
PU225
2Q
JEL5404
JEL6213
BU
Pulse
JEL.JZF
4H
TSV
MPV
4HV
HV, K
4R
4F210
FV
MSV
JM
ASC, RE
QE, QEA
ST
HSV

Overall Dimension

5V210-06

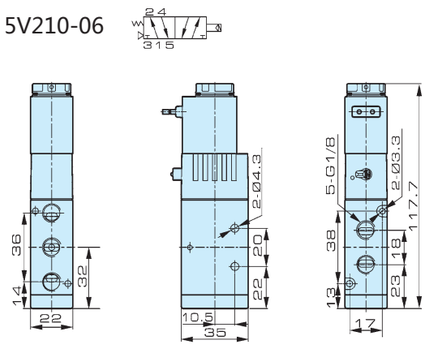

5V210-06

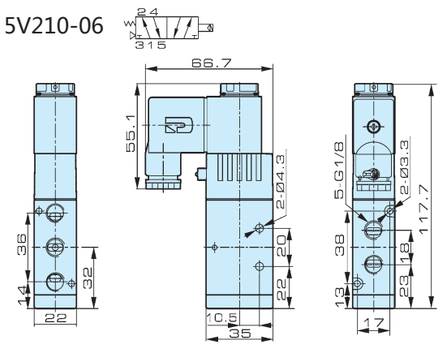

5V220-06

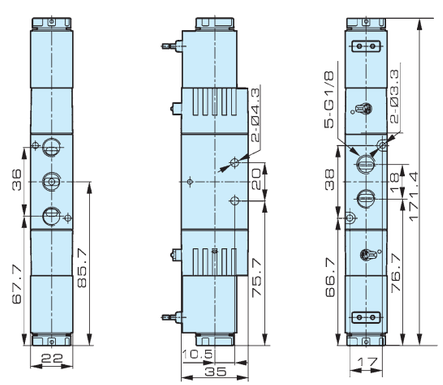

5V220-06

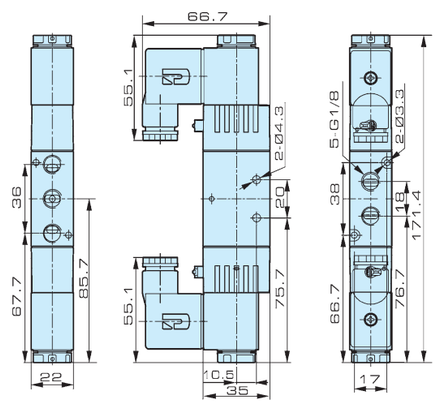

5V230-06

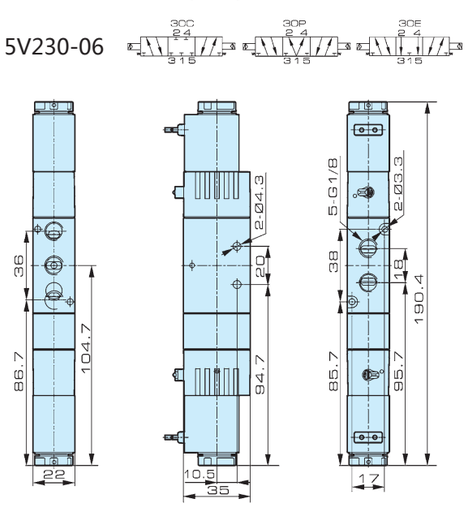

5V230-06

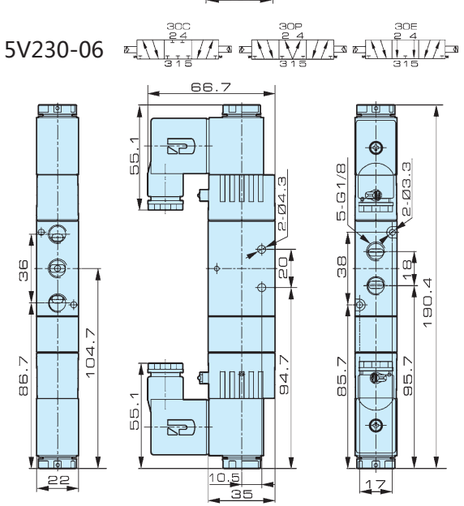

5V210-08

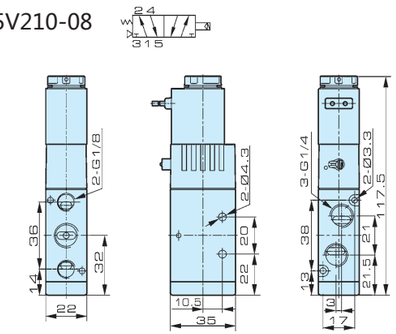

5V210-08

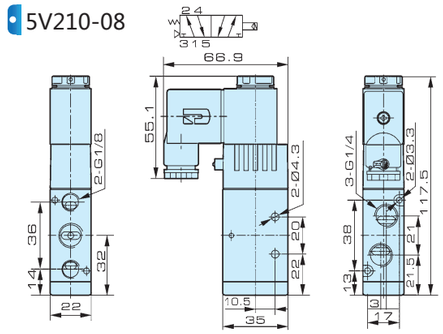

5V220-08

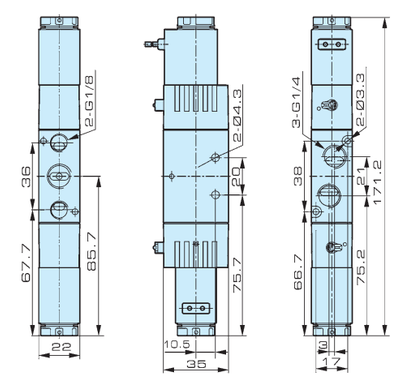

5V220-08

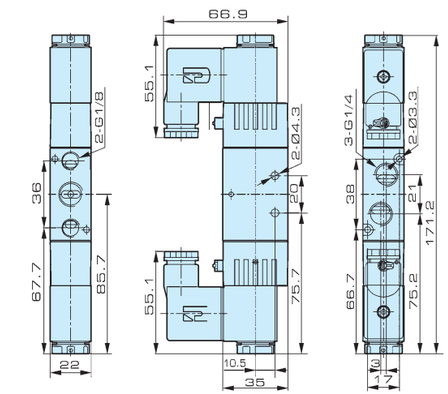

5V230-08

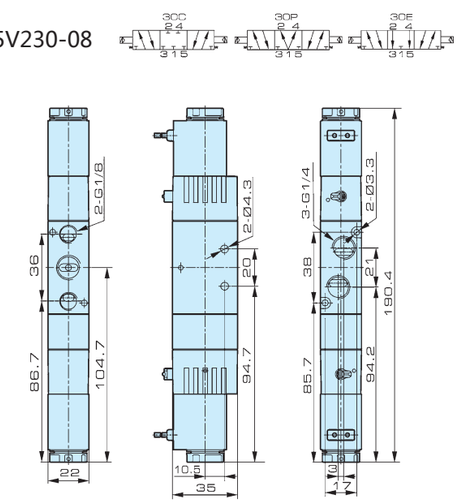

5V230-08

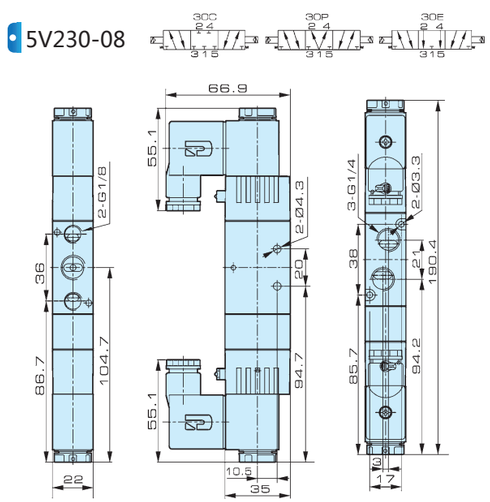

Valve
J4V100
J4V200
J4V300
J4V400
SV
5V100
5V200
5V300
5V400
Manifold
MCS
JVT307
JSY
5JV
JEL
MVSD
VF
BM
551
JEL10
3VJZF
Diaphragm
JELVD
JELMP
JELP/G
Coil
3V1
2P
2V
2W
2W(Big)
2L
VX
PU
PU225
2Q
JEL5404
JEL6213
BU
Pulse
JEL.JZF
4H
TSV
MPV
4HV
HV, K
4R
4F210
FV
MSV
JM
ASC, RE
QE, QEA
ST
HSV

JELPC® | JELPC — China Pneumatic

Own Independent
Intellectual Property Rights

APPL:
2013303668314.7

5V310-10-S

5V320-10

5V330C-10

Features

1. Single solenoid valve uses new design with piston reset and improve steadiness, functionality and life time.
2. We guarantee inner hole with Ra0.1 roughness within our new processing.
3. Special treatment to take care of inner hole reduce the resistence.
4. Valve spool adding anti-friction seal to improve the stability movement to increase the life time.
5. For our manufacturing process we use imported HNBR to reduce friction.
6. To import German high standard special grease which provides film in order to reduce friction.
7. To introduce Taiwan high precise injection mould and seals die, to enhance precision and stability.
8. New visual style, synchronized with global outstanding product standard.
9. Adding the logo on behalf of the company innovation for individual market recognition on the product which has design patent.

Ordering Code

5V	-	3	-	10	-	10	-	B	-	F	-	AC220V	-	W	-	F
Specification		Series Code		Coil and Position		Port Size		Connection and Initial status		Reset form and color		Standard Voltage		Wiring		Joint
5V:2(3) way solenoid valve		300 Series		10: Single coil 5/2 way		08: 1/4"		Blank: Threaded		Blank: Air reset (red front and back cover)		DC12V		Blank:Brown with light terminal		1F-20F
5A:2(3) way air pilot valve				20: Double coil 5/2 way		10: 3/8"		B: Namur		F: Air reset (black front and backcover)		DC24V		LD1:White with light terminal		
				30C: Double coils 5/3 way-closed						S: Spring reset (black front and back cover)		AC24V		W:Lead wire		
				30E: Double coils 5/3 way-exhausted						**(*Note)**		AC110V				
				30P: Double coils 5/3 way-pressed								AC220V				

***Note: 1. Red and black colour is available for option.**
2. Only black colour is available for spring reset products.
3. Only black colour and spring reset is available for 310, 410 series single coil valve.

Specification

Model	5V310-08	5V320-08	5V330C-08	5V330E-08	5V330P-08	5V310-10	5V320-10	5V330C-10	5V330E-10	5V330P-10
	5A310-08	5A320-08	5A330C-08	5A330E-08	5A330P-08	5A310-10	5A320-10	5A330C-10	5A330E-10	5A330P-10
Valve Type	5/2 way		5/3 way			5/2 way		5/3 way		
Effective Cross Section Area	25 mm^2 (CV = 1.40)		18 mm^2 (CV = 1.00)			30 mm^2 (CV = 1.68)		18 mm^2 (CV = 1.00)		
Port Size	Inlet, Outlet, Exhaust Port = G 1/4"					Inlet, Outlet = G 3/8" Exhaust Port = G 1/4"				
Working Medium	40 Micron Filtered Air									
Operation	Internal piloted									
Working-pressure	0.15 ~ 0.8 MPa									
Max. Test Pressure	1.2 MPa									
Ambient Temperature	-20 ~ 70 ℃									
Operating Voltage Tolerance	DC: ± 10% AC: ± 15%									
Power Consumption	AC: 3.5 VA DC: 3.0 W									
Connector Protection	F Class, IP 65									
Wiring / Connector	Cable / Lead Wire or DIN Connector									
Switching Frequency	5 Cycles / Sec.									
Response Time	0.05 Sec.									

ISO9001:2008 CE

5V300 Series
Solenoid Valve / Air piloted Valve

Internal Structure

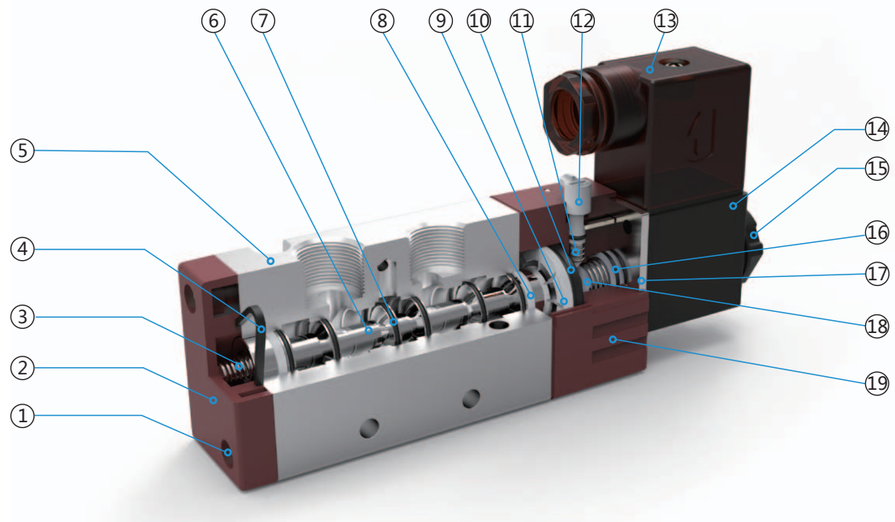

Parts

Number	Name	Number	Name	Number	Name
1	Cross slot pan screw	8	Anti-friction seal	15	Coil nut
2	Back cover	9	Piston	16	O ring
3	Spring	10	Y ring	17	Connecting part
4	Anomalous seal	11	Spring	18	Plunger
5	Valve body	12	Mannual ride spindle	19	Piloted valve base
6	Valve spool	13	Terminal		
7	Flat ring	14	Coil		

Flow Chart

5V310-08

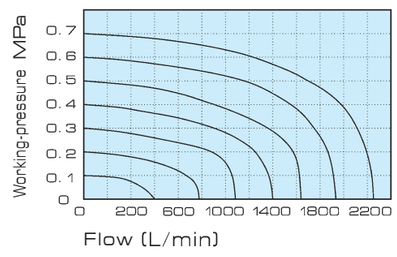

5V310-10

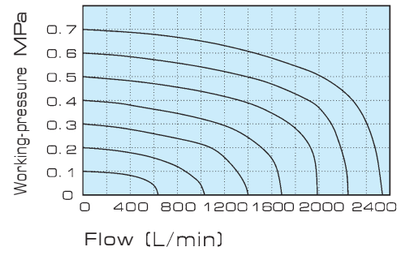

Valve
J4V100
J4V200
J4V300
J4V400
SV
5V100
5V200
5V300
5V400
Manifold
MCS
JVT307
JSY
5JV
JEL
MVSD
VF
BM
551
JEL10
3VJZF
Diaphragm
JELVD
JELMP
JELP/G
Coil
3V1
2P
2V
2W
2W(Big)
2L
VX
PU
PU225
2Q
JEL5404
JEL6213
BU
Pulse
JEL.JZF
4H
TSV
MPV
4HV
HV, K
4R
4F210
FV
MSV
JM
ASC, RE
QE, QEA
ST
HSV

JELPC® | JELPC — China Pneumatic

ISO9001:2008 CE

5V300 Series
Solenoid Valve / Air piloted Valve

Valve
J4V100
J4V200
J4V300
J4V400
SV
5V100
5V200
5V300
5V400
Manifold
MCS
JVT307
JSY
5JV
JEL
MVSD
VF
BM
551
JEL10
3VJZF
Diaphragm
JELVD
JELMP
JELP/G
Coil
3V1
2P
2V
2W
2W(Big)
2L
VX
PU
PU225
2Q
JEL5404
JEL6213
BU
Pulse
JEL.JZF
4H
TSV
MPV
4HV
HV, K
4R
4F210
FV
MSV
JM
ASC, RE
QE, QEA
ST
HSV

Overall Dimension

5V310-08

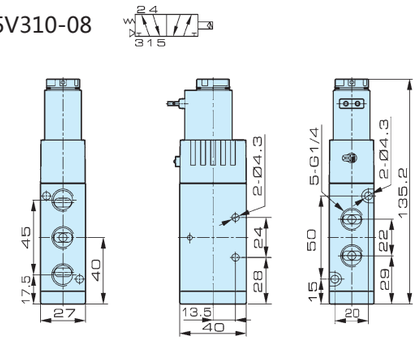

5V310-08

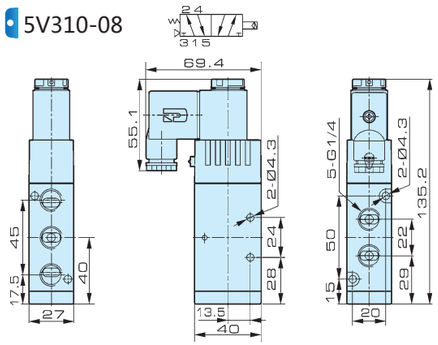

5V320-08

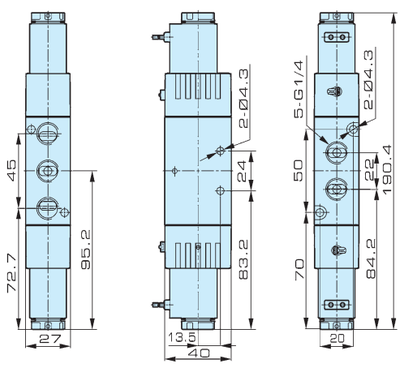

5V320-08

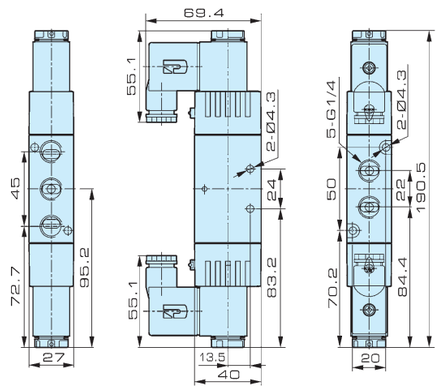

5V330-08

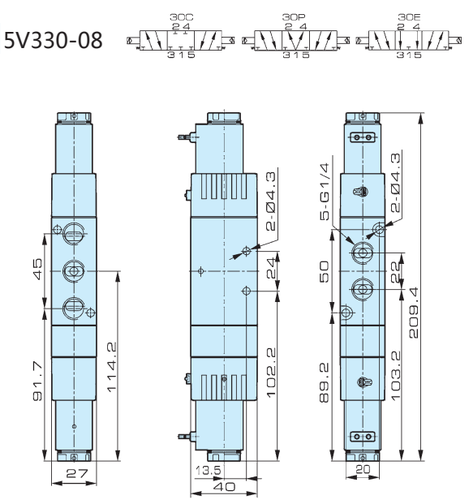

5V330-08

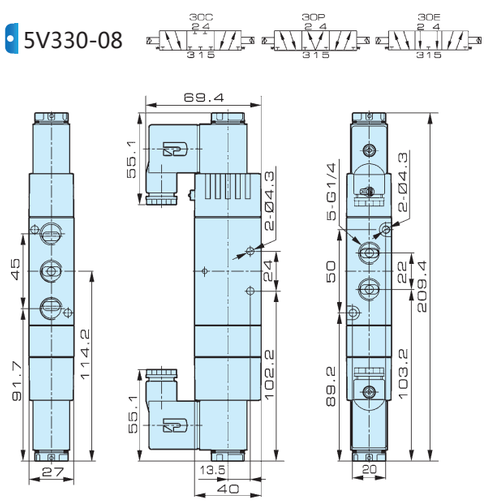

5V310-10

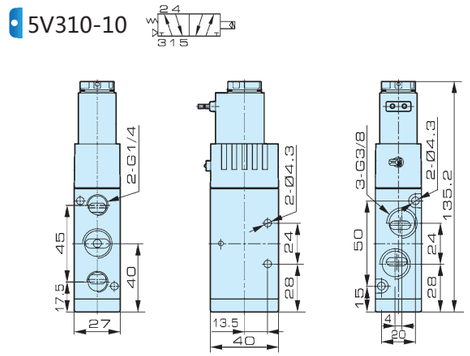

5V310-10

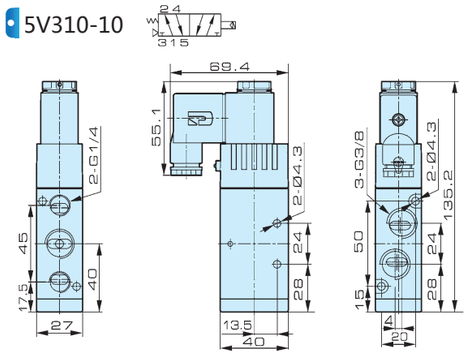

5V320-10

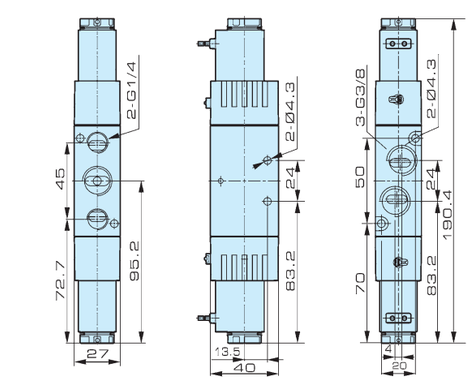

5V320-10

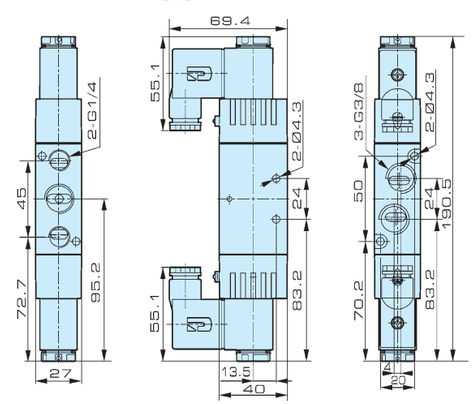

5V330-10

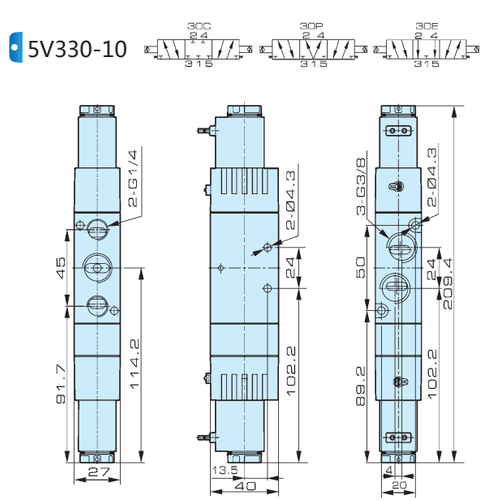

5V330-10

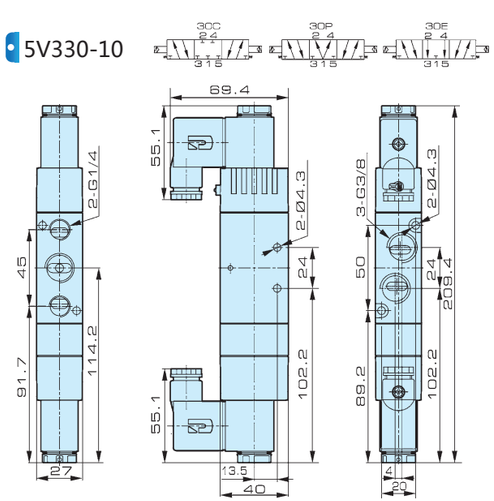

Valve
J4V100
J4V200
J4V300
J4V400
SV
5V100
5V200
5V300
5V400
Manifold
MCS
JVT307
JSY
5JV
JEL
MVSD
VF
BM
551
JEL10
3VJZF
Diaphragm
JELVD
JELMP
JELP/G
Coil
3V1
2P
2V
2W
2W(Big)
2L
VX
PU
PU225
2Q
JEL5404
JEL6213
BU
Pulse
JEL.JZF
4H
TSV
MPV
4HV
HV, K
4R
4F210
FV
MSV
JM
ASC, RE
QE, QEA
ST
HSV

JELPC® | JELPC — China Pneumatic

Own Independent
Intellectual Property Rights

APPL:
2013303668314.7

5V410-15-S

5V420-15

5V430C-15

Features

1. Single solenoid valve uses new design with piston reset and improve steadiness, functionality and life time.
2. We guarantee inner hole with Ra0.1 roughness within our new processing.
3. Special treatment to take care of inner hole reduce the resistence.
4. Valve spool adding anti-friction seal to improve the stability movement to increase the life time.
5. For our manufacturing process we use imported HNBR to reduce friction.
6. To import German high standard special grease which provides film in order to reduce friction.
7. To introduce Taiwan high precise injection mould and seals die, to enhance precision and stability.
8. New visual style, synchronized with global outstanding product standard.
9. Adding the logo on behalf of the company innovation for individual market recognition on the product which has design patent.

Ordering Code

5V	-	4	-	10	-	10	-	B	-	F	-	AC220V	-	W	-	F
Specification		Series Code		Coil and Position		Port Size		Connection and Initial status		Reset form and color		Standard Voltage		Wiring		Joint
5V:2(3) way solenoid valve		400 Series		10: Single coil 5/2 way		15: 1/2"		Blank: Threaded		Blank: Air reset (red front and back cover)		DC12V		Blank:Brown with light terminal		1F-20F
5A:2(3) way air pilot valve				20: Double coil 5/2 way				B: Namur		F: Air reset (black front and backcover)		DC24V		LD1:White with light terminal		
				30C: Double coils 5/3 way-closed						S: Spring reset (black front and back cover)		AC24V		W:Lead wire		
				30E: Double coils 5/3 way-exhausted						(*Note)		AC110V				
				30P: Double coils 5/3 way-pressed								AC220V				

***Note: 1. Red and black colour is available for option.**
2. Only black colour is available for spring reset products.
3. Only black colour and spring reset is available for 310, 410 series single coil valve.

Specification

Model	5V410-15	5V420-15	5V430C-15	5V430E-15	5V430P-15
	5A410-15	5A420-15	5A430C-15	5A430E-15	5A430P-15
Valve Type	5/2 Way		5/3 Way		
Effective Cross Section Area	50 mm^2 (CV=2.79)		30 mm^2 (CV=1.68)		
Port Size	Inlet, Outlet, Exhaust Port = G1/2"				
Working Medium	40 Micron Filtered Air				
Operation	Internal piloted				
Working-pressure	0.15 ~ 0.8 MPa				
Max. Test Pressure	1.2 MPa				
Ambient Temperature	-20 ~ 70 ℃				
Operating Voltage Tolerance	DC: ± 10% AC: ± 15%				
Power Consumption	AC: 3.5 VA DC: 3.0 W				
Connector Protection	F Class, IP 65				
Wiring / Connector	Cable / Lead Wire or DIN Connector				
Switching Frequency	5 Cycles / Sec.				
Response Time	0.05 Sec.				

ISO9001:2008 CE

Valve
J4V100
J4V200
J4V300
J4V400
SV
5V100
5V200
5V300
5V400
Manifold
MCS
JVT307
JSY
5JV
JEL
MVSD
VF
BM
551
JEL10
3VJZF
Diaphragm
JELVD
JELMP
JELP/G
Coil
3V1
2P
2V
2W
2W(Big)
2L
VX
PU
PU225
2Q
JEL5404
JEL6213
BU
Pulse
JEL.JZF
4H
TSV
MPV
4HV
HV, K
4R
4F210
FV
MSV
JM
ASC, RE
QE, QEA
ST
HSV

Internal Structure

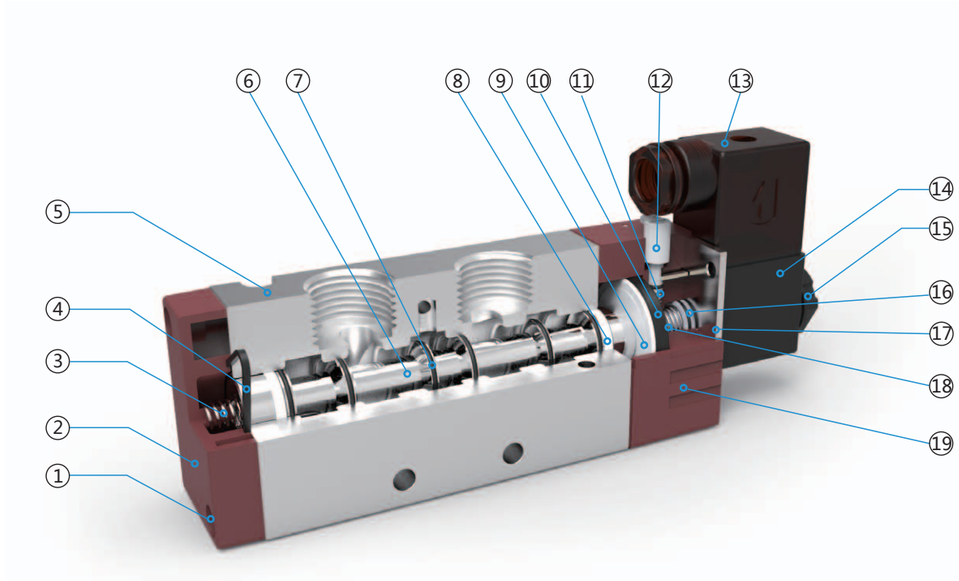

Parts

Number	Name	Number	Name	Number	Name
1	Cross slot pan screw	8	Anti-friction seal	15	Coil nut
2	Back cover	9	Piston	16	O ring
3	Spring	10	Y ring	17	Connecting part
4	Anomalous seal	11	Spring	18	Plunger
5	Valve body	12	Mannual ride spindle	19	Piloted valve base
6	Valve spool	13	Terminal		
7	Flat ring	14	Coil		

Flow Chart

5V410-15

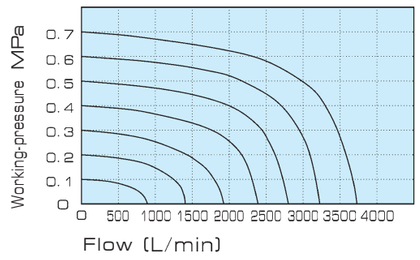

Valve
J4V100
J4V200
J4V300
J4V400
SV
5V100
5V200
5V300
5V400
Manifold
MCS
JVT307
JSY
5JV
JEL
MVSD
VF
BM
551
JEL10
3VJZF
Diaphragm
JELVD
JELMP
JELP/G
Coil
3V1
2P
2V
2W
2W(Big)
2L
VX
PU
PU225
2Q
JEL5404
JEL6213
BU
Pulse
JEL.JZF
4H
TSV
MPV
4HV
HV, K
4R
4F210
FV
MSV
JM
ASC, RE
QE, QEA
ST
HSV

Overall Dimension

5V410-15

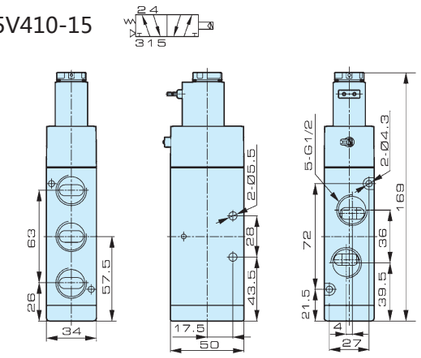

5V410-15

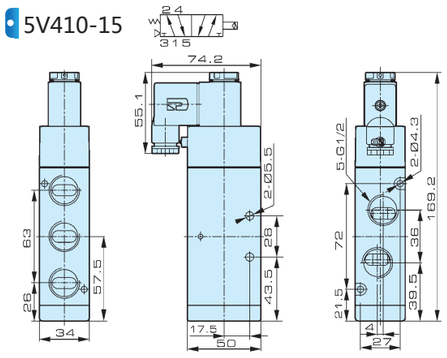

5V420-15

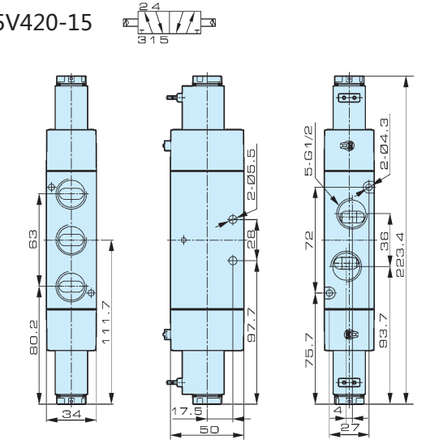

5V420-15

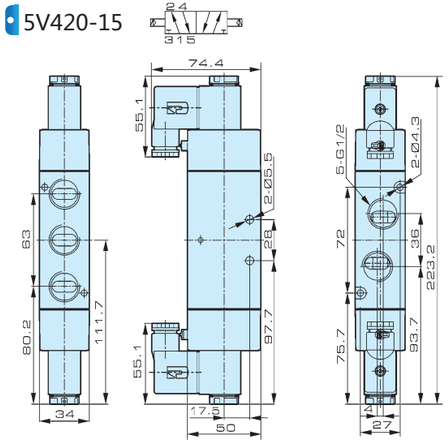

5V430-15

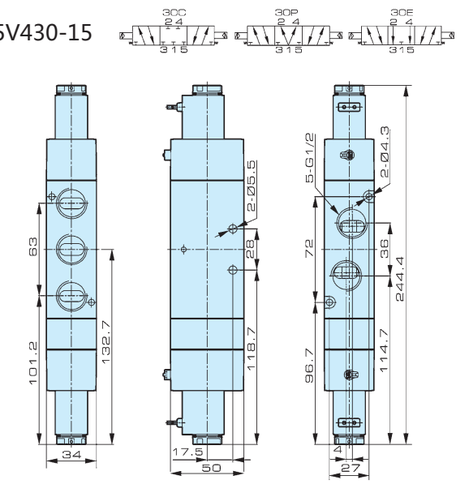

5V430-15

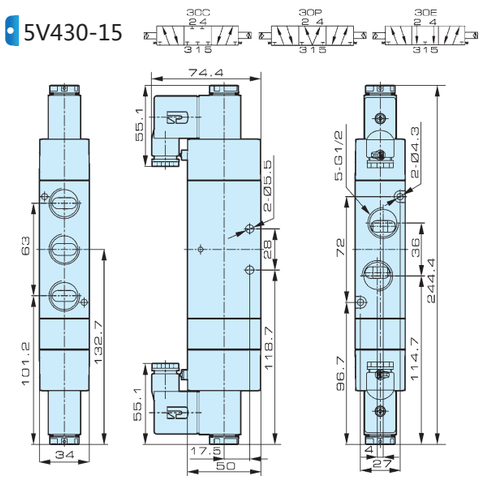

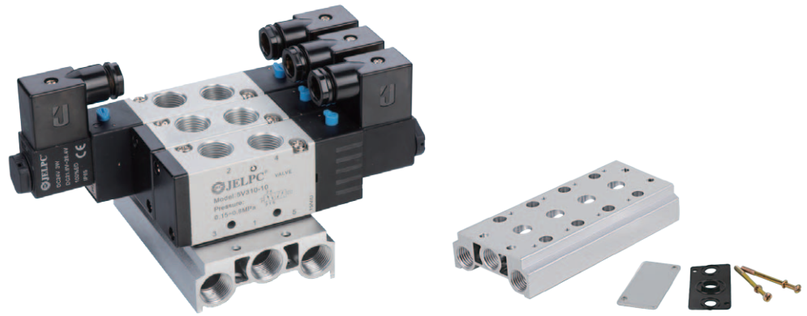

Base Ordering Code

□	-	100M	-	□F
Specification		Series Code		Joint
Blank: 4V Series		100M: Sub-plate for 100 series valves		100M: 1~20F
3V: 3V Series		200M: Sub-plate for 200 series valves		200M: 1~20F
		300M: Sub-plate for 300 series valves		300M: 1~20F
		400M: Sub-plate for 400 series valves		400M: 1~20F

Accessary Ordering Code

□	-	200M	-	B
Specification		Series Code		Joint
Blank: 4V Series		100M: Sub-plate for 100 series valves		B : Blanking plate
3V: 3V Series		200M: Sub-plate for 200 series valves		C: Sealing gasket
		300M: Sub-plate for 300 series valves		D: Screw
		400M: Sub-plate for 400 series valves		

Overall Dimension

4V

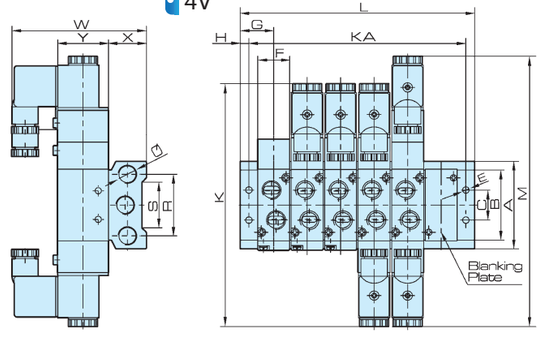

3V

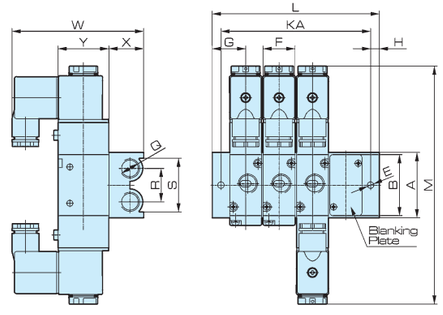

Specification

Inside Dia./ Symbol	A	B	C	E	F	G	K	KA	L	M	Q	R	S	W	X	Y
4V-100M-□F	58	43	20	4.2	18.3	19	140	(n-1)*19+28	(n-1)*19+38	155	G1/4	40	30	78.5	25	27
4V-200M-□F	59	50	21	4.3	22.2	23	170	(n-1)*23+34	(n-1)*23+46	189	G1/4	43	32	92.5	26	35
4V-300M-□F	75	64	26	4.5	27.3	27	189	(n-1)*28+42	(n-1)*28+54	208	G3/8	53	48	99	30	40
4V-400M-□F	98	94	32	5.5	34.3	31.5	222	(n-1)*35+49	(n-1)*35+63	243	G1/2	68	67	112	38	50

Inside Dia./ Symbol	A	B	E	F	G	H	KA	L	M	Q	R	S	W	X	Y
3V-100M-□F	31	30	4.5	18	18.5	4.5	(n-1)*19+28	(n-1)*19+37	130.8	G1/8	17.5	25	72.8	19	27
3V-200M-□F	45	43	4.5	22	23	6	(n-1)*23+34	(n-1)*23+46	163.4	G1/4	23	37	90.9	24	35
3V-300M-□F	50	47	4.5	27	27	6	(n-1)*28+42	(n-1)*28+54	190.5	G3/8	29	42	97.4	28	40
3V-400M-□F	62.5	62.5	5.5	34	31.5	7	(n-1)*35+49	(n-1)*35+63	191.9	G1/2	35.5	51.5	109.4	35	50

Valve
J4V100
J4V200
J4V300
J4V400
SV
5V100
5V200
5V300
5V400
Manifold
MCS
JVT307
JSY
5JV
JEL
MVSD
VF
BM
551
JEL10
3VJZF
Diaphragm
JELVD
JELMP
JELP/G
Coil
3V1
2P
2V
2W
2W(Big)
2L
VX
PU
PU225
2Q
JEL5404
JEL6213
BU
Pulse
JEL.JZF
4H
TSV
MPV
4HV
HV, K
4R
4F210
FV
MSV
JM
ASC, RE
QE, QEA
ST
HSV

JELPC® | JELPC — China Pneumatic

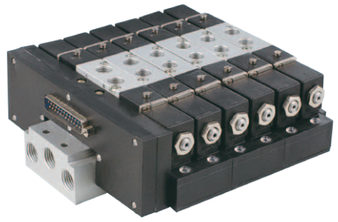

MCS100
Multiple Connection System

15MM-10F

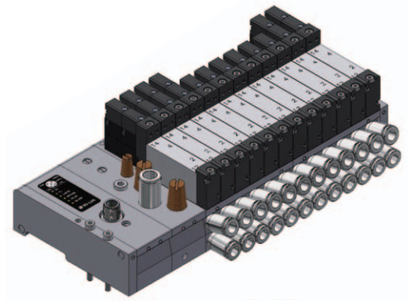

JEL-REF
Fieldbus Valve Terminals

Feature

1. Inlet ports and outlet ports are arranged together to be more compact.
2. All pneumatic and solenoid parts are tested for better reliability.
3. Apply 25-DSUB connectors for easier wiring and time saving.
4. Comply with IP65 which is suitable for terrible ambient condition.
5. 5/2 way and 5/3 way combine with single and coil, doublemulitple combinations are available upon requesting.

Ordering Code

MCS	-	100	-	06	-	C	-	Ek	-	DC24V	-	F
Series Code		100 Series		Port Size		Coil and Position		Amount		Voltage		The Public End Connection Form
Multiple Connection System				06: G 1/8"		C: Double-coil three-position closed E: Double-coil three-position exhausted P: Double-coil three-position pressed		E- 4 double coil solenoid valves k-10 single coil solenoid valves more choices, please consult solenoid valves mixed by single and double coil table		DC12V DC24V		Blank: Public termination negative F: Public connected the positive

Specification

Model	MCS100		
Valve Type	5/2 Way Single Coil	5/2 Way Double Coil	5/3 Way
Effective Cross Section Area	12 mm^2 (CV = 0.67)		9 mm^2 (CV = 0.5)
Port Size	Inlet, Outlet, Exhaust Port = G1/8"		
Working Medium	40 Micron Filtered Air		
Operation	Internal Piloted		
Working-pressure	0.15～0.8 MPa		
Max. Test Pressure	1.2 MPa		
Max. Ambient Temperature	-20～70℃		
Rating Voltage Tolerance	± 10%		
Power Consumption	AC: 2.8 VA DC: 2.8 W		
Connector Protection	F Class, IP 65		
Switching Frequency	5 Cycles / Sec.		
Response Time	0.05 Sec.		

ISO9001:2008 CE

MCS Series
Multiple Connection System

Overall Dimension

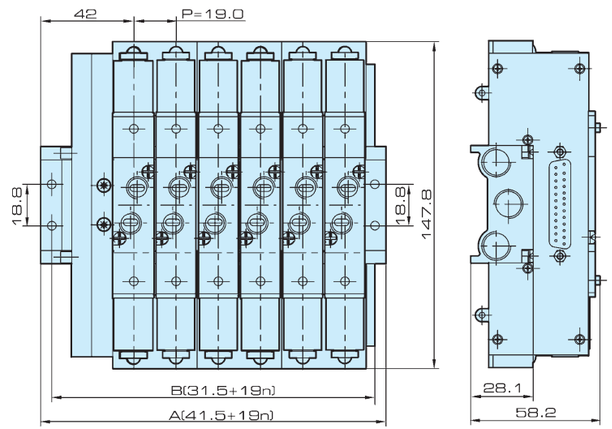

Pins No. and Color

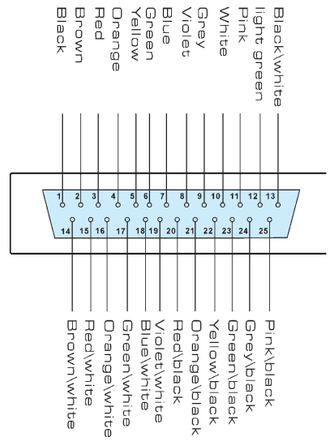

Note) 23 24 25 PIN is common port, According to the practical circuit requirements,Choose common port connect "positive" or "negative" model. Don't allow to mix.

Circuit Drawing

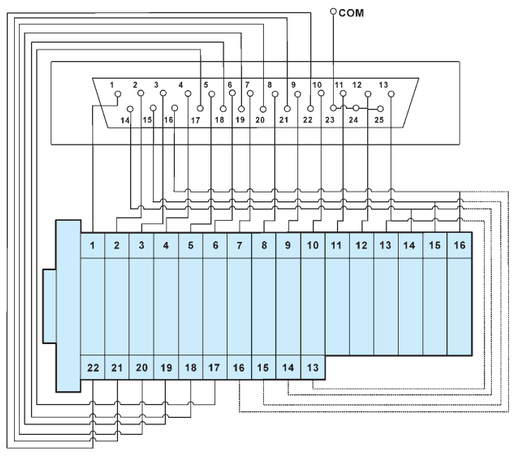

Solenoid Valves Mixed by Single and Double Coil

		1 SOLENOID VALVES (single coil)																
		a	b	c	d	e	f	g	h	i	j	k	l	m	n	o	p	q
		0	1	2	3	4	5	6	7	8	9	10	11	12	13	14	15	16
2 SOLENOID VALVES (double coil)	A 0																	
	B 1																	
	C 2																	
	D 3																	
	E 4																	
	F 5																	
	G 6																	
	H 7																	
	I 8																	
	J 9																	
	K 10																	

Valve
J4V100
J4V200
J4V300
J4V400
SV
5V100
5V200
5V300
5V400
Manifold
MCS
JVT307
JSY
5JV
JEL
MVSD
VF
BM
551
JEL10
3VJZF
Diaphragm
JELVD
JELMP
JELP/G
Coil
3V1
2P
2V
2W
2W(Big)
2L
VX
PU
PU225
2Q
JEL5404
JEL6213
BU
Pulse
JEL.JZF
4H
TSV
MPV
4HV
HV, K
4R
4F210
FV
MSV
JM
ASC, RE
QE, QEA
ST
HSV

JELPC® | JELPC — China Pneumatic

Valve
J4V100
J4V200
J4V300
J4V400
SV
5V100
5V200
5V300
5V400
Manifold
MCS
JVT307
JSY
5JV
JEL
MVSD
VF
BM
551
JEL10
3VJZF
Diaphragm
JELVD
JELMP
JELP/G
Coil
3V1
2P
2V
2W
2W(Big)
2L
VX
PU
PU225
2Q
JEL5404
JEL6213
BU
Pulse
JEL.JZF
4H
TSV
MPV
4HV
HV, K
4R
4F210
FV
MSV
JM
ASC, RE
QE, QEA
ST
HSV

Features

1. Direct-acting type, quick response;
2. Poppet design, good sealing;
3. No lubrication required;
4. Manual Override facilitates machine set up;
5. Many voltage available.

Ordering Code

JVT307	-	06	-	DC24V	-	W	-	□
Specification		Port Size		Voltage		Wiring		Thread
JVT307		06: 1/8"		DC12V		W: Lead Wire		Blank: G
		08: 1/4"		DC24V				P: PT
				DC110V				N: NPT

Specification

Model	JVT307-06	JVT307-08
Working Medium	Air (40 Micron dry filtered air)	
Port Size	Inlet, Outlet, Exhaust Port=G1/8"	Inlet, Outlet, Exhaust Port = G1/4"
Position	3/2 way	
Flow	180L/min	
Lubrication	No Need	
Working Pressure	0～1.0MPa	
Max Pressure	1.5MPa	
Working Temperature	-20～80℃	
Body Materials	Aluminum	
Standard Voltage	DC12V、DC24V、DC110V	
Operating Voltage Range	DC: ±10%	
Power Consumption	DC: 4.5W	
Connector Protection	IP65 (DIN40050)	
Temperature class	H class	
Wiring/Connector	Lead Wire	
Response Time	12ms	
Switching Frequency	40 Cycles/Sec	

ISO9001:2008 CE

Overall Dimension

JVT307-06

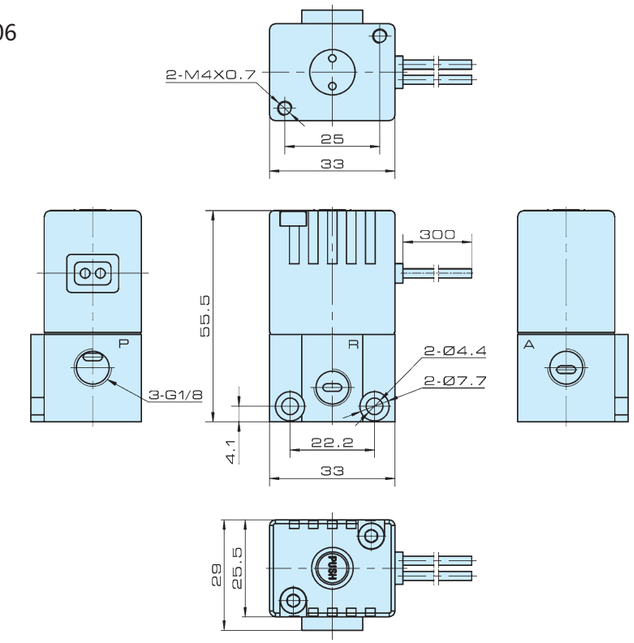

JVT307-08

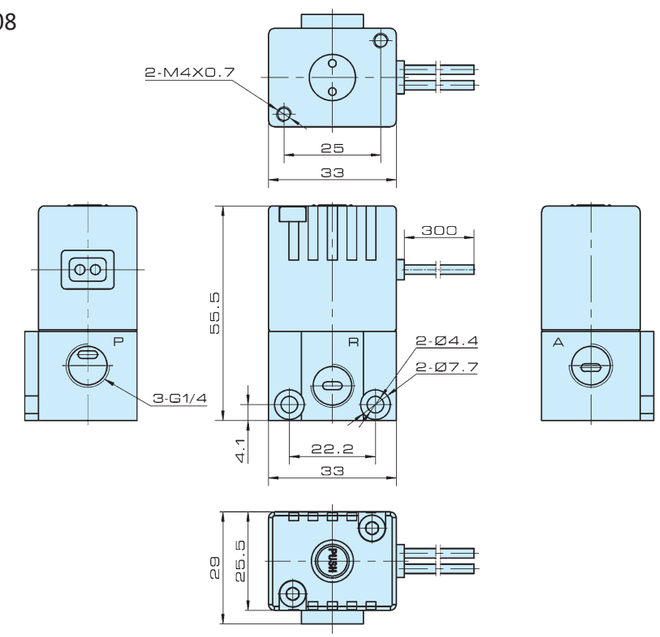

Valve
J4V100
J4V200
J4V300
J4V400
SV
5V100
5V200
5V300
5V400
Manifold
MCS
JVT307
JSY
5JV
JEL
MVSD
VF
BM
551
JEL10
3VJZF
Diaphragm
JELVD
JELMP
JELP/G
Coil
3V1
2P
2V
2W
2W(Big)
2L
VX
PU
PU225
2Q
JEL5404
JEL6213
BU
Pulse
JEL.JZF
4H
TSV
MPV
4HV
HV, K
4R
4F210
FV
MSV
JM
ASC, RE
QE, QEA
ST
HSV

JELPC® | JELPC — China Pneumatic

APPL: 201330366828.5

JSY150-06

JSY152-06

Features

1. Inner exhausting structure and no pollution.
2. Low power consumption of 1.2W.
3. Sliding structure and special to upgrade flow, life time, seal function and response.
4. Special treatment to look after inner hole for less friction, lower starting pressure and long life time.
5. Integrated intallation to save space.

Ordering Code

JSY	-	15	-	0	-	06	-	DC24V	-	F
Specification		Series Code		Position		Port Size		Voltage		Joint
		15mm Series		0: Single coil 5/2 way		06: 1/8"		DC24V		1F-20F
				2: Double coil 5/2 way						
				3C: double coil 5/3 way-closed						
				3E: double coil 5/3 way-exhausted						
				3P: double coil 5/3 way-pressed						

Specification

Valve type (mm)	JSY150-06	JSY152-06	JSY153C-06	JSY153P-06	JSY153E-06
Valve type	5/2 way		5/3 way		
Effective cross section area	8.3mm² (CV = 0.49)		7.2mm² (CV = 0.42)		
Port size	Inlet=Outlet=Exhaust=G1/8"				
Working medium	40 Micron filted air				
Working pressure	0.15 ~ 0.7MPa	0.1 ~ 0.7MPa	0.15 ~ 0.7MPa		
Max pressure	1MPa				
Working temperature	0 ~ 50℃				
Power consumption	1.2W				
Switching frequency	5 Cycles/sec				

JSY Series
Solenoid Valve / Air piloted Valve

Valve
J4V100
J4V200
J4V300
J4V400
SV
5V100
5V200
5V300
5V400
Manifold
MCS
JVT307
JSY
5JV
JEL
MVSD
VF
BM
551
JEL10
3VJZF
Diaphragm
JELVD
JELMP
JELP/G
Coil
3V1
2P
2V
2W
2W(Big)
2L
VX
PU
PU225
2Q
JEL5404
JEL6213
BU
Pulse
JEL.JZF
4H
TSV
MPV
4HV
HV, K
4R
4F210
FV
MSV
JM
ASC, RE
QE, QEA
ST
HSV

Internal Structure

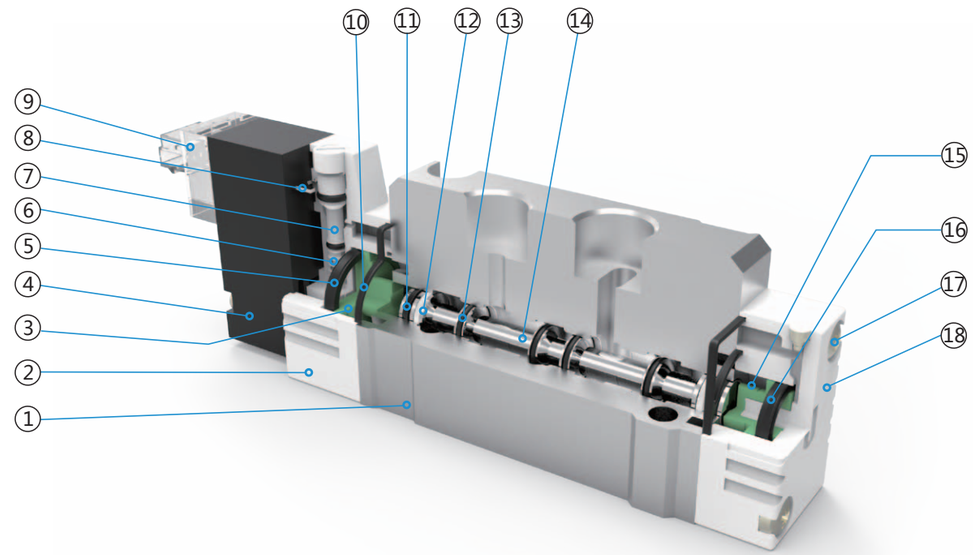

Parts

Number	Name	Number	Name	Number	Name
1	Valve body	8	Plug unit	15	Connecting seal
2	Pilot base	9	Pilot	16	Connecting plate
3	Pilot piston	10	Dysmorphism seal	17	Screw
4	Cross slot pan screw	11	Valve spool Y ring	18	Reset piston
5	Piston Y ring	12	Anti-friction seal	19	Reset piston Y plug
6	Spring	13	Flat ring	20	Cross slot pan screw
7	Mannual ride spindle	14	Valve spool	21	Back cover

Flow Chart

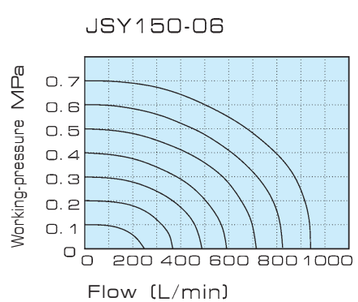

JELPC — China Pneumatic

Valve
J4V100
J4V200
J4V300
J4V400
SV
5V100
5V200
5V300
5V400
Manifold
MCS
JVT307
JSY
5JV
JEL
MVSD
VF
BM
551
JEL10
3VJZF
Diaphragm
JELVD
JELMP
JELP/G
Coil
3V1
2P
2V
2W
2W(Big)
2L
VX
PU
PU225
2Q
JEL5404
JEL6213
BU
Pulse
JEL.JZF
4H
TSV
MPV
4HV
HV, K
4R
4F210
FV
MSV
JM
ASC, RE
QE, QEA
ST
HSV

Overall Dimension

JSY150

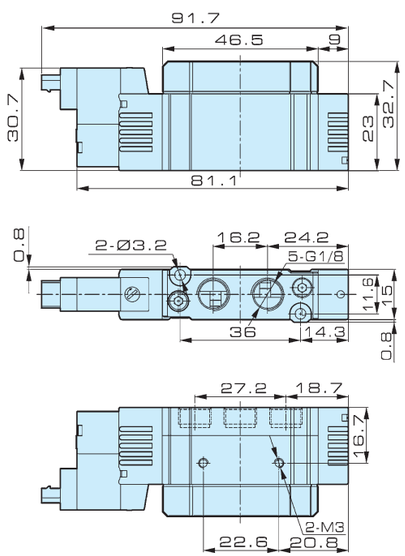

JSY152

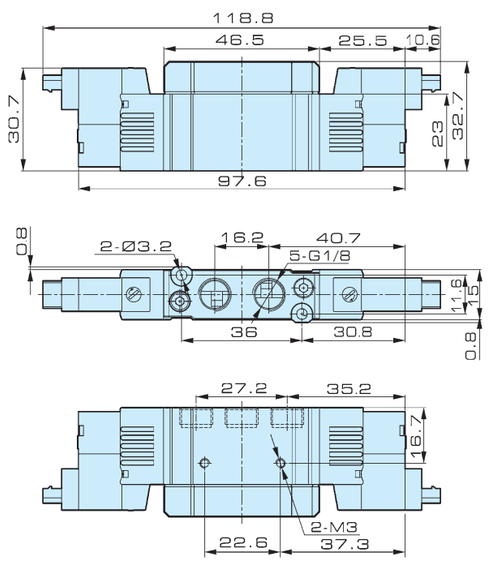

JSY153

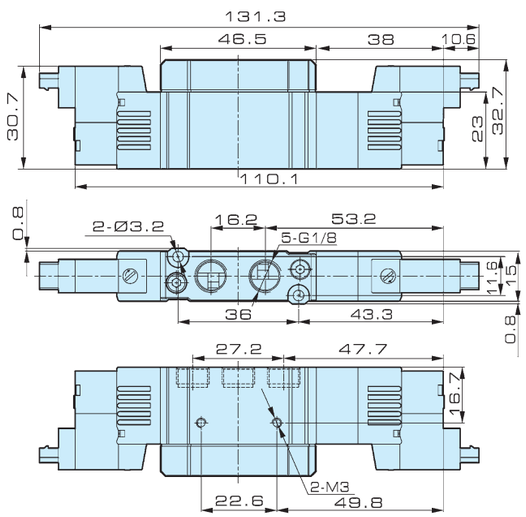

5JV110-06

5JV120-06

5JV130C-06

5JV210-06

5JV220-06

5JV230C-06

Features

1. The main body of the solenoid valve is used new structure of 5V, with characteristics of large flow and long life time same as 5V.
2. Piloted valve base using 10mm low voltage valve, can effectively save power consumption and lower temperature rise.

Ordering Code

5JV	-	1	-	10	-	06	-	B	-	S	-	AC220V	-	F
Specification		Series Code		Coil and Position		Port Size		Connection and Initial status		Reset Form		Standard Voltage		Joint
5JV: 5/2(3) way solenoid valve		1: 100 Series		10: Single coil 5/2 way		M5: M5×0.8		Blank: Threaded		S: Spring reset		DC12V		1F-20F
		2: 200 Series		20: Double coil 5/2 way		06: 1/8"		B: Namur				DC24V		
				30C: Double coils 5/3 way-closed		08: 1/4"								
				30E: Double coils 5/3 way-exhausted										
				30P: Double coils 5/3 way-pressed										

Specification

Model	5JV110-M5	5JV120-M5	5JV130C-M5	5JV130E-M5	5JV130P-M5	5JV110-06	5JV120-06	5JV130C-06	5JV130E-06	5JV130P-06
Valve Type	5/2 Way		5/3 Way			5/2 Way		5/3 Way		
Effective Cross Section Area	10mm² (CV=0.56)		7mm² (CV=0.4)			12mm² (CV=0.67)		9mm² (CV=0.0.5)		
Port Size	Inlet, Outlet, Exhaust Port = M5					Inlet, Outlet, Exhaust Port = G1/8				
Model	**5JV210-06**	**5JV220-06**	**5JV230C-06**	**5JV230E-06**	**5JV230P-06**	**5JV210-08**	**5JV220-08**	**5JV230C-08**	**5JV230E-08**	**5JV230P-08**
Valve Type	5/2 Way		5/3 Way			5/2 Way		5/3 Way		
Effective Cross Section Area	14mm² (CV=0.78)		12mm² (CV=0.67)			16mm² (CV=0.89)		12mm² (CV=0.67)		
Port Size	Inlet, Outlet, Exhaust Port =G1/8					Inlet, Outlet, Exhaust Port =G1/4				
Working Medium	40 Micron Filtered Air									
Working-pressure	0.15~0.7MPa									
Max. Test Pressure	1MPa									
Ambient Temperature	0~50℃									
Power Consumption	1.2W									
Switching Frequency	5 Cycles / Sec.									

Valve
J4V100
J4V200
J4V300
J4V400
SV
5V100
5V200
5V300
5V400
Manifold
MCS
JVT307
JSY
5JV
JEL
MVSD
VF
BM
551
JEL10
3VJZF
Diaphragm
JELVD
JELMP
JELP/G
Coil
3V1
2P
2V
2W
2W(Big)
2L
VX
PU
PU225
2Q
JEL5404
JEL6213
BU
Pulse
JEL.JZF
4H
TSV
MPV
4HV
HV, K
4R
4F210
FV
MSV
JM
ASC, RE
QE, QEA
ST
HSV

5JV Series
Solenoid Valve

Valve
J4V100
J4V200
J4V300
J4V400
SV
5V100
5V200
5V300
5V400
Manifold
MCS
JVT307
JSY
5JV
JEL
MVSD
VF
BM
551
JEL10
3VJZF
Diaphragm
JELVD
JELMP
JELP/G
Coil
3V1
2P
2V
2W
2W(Big)
2L
VX
PU
PU225
2Q
JEL5404
JEL6213
BU
Pulse
JEL.JZF
4H
TSV
MPV
4HV
HV, K
4R
4F210
FV
MSV
JM
ASC, RE
QE, QEA
ST
HSV

Internal Structure

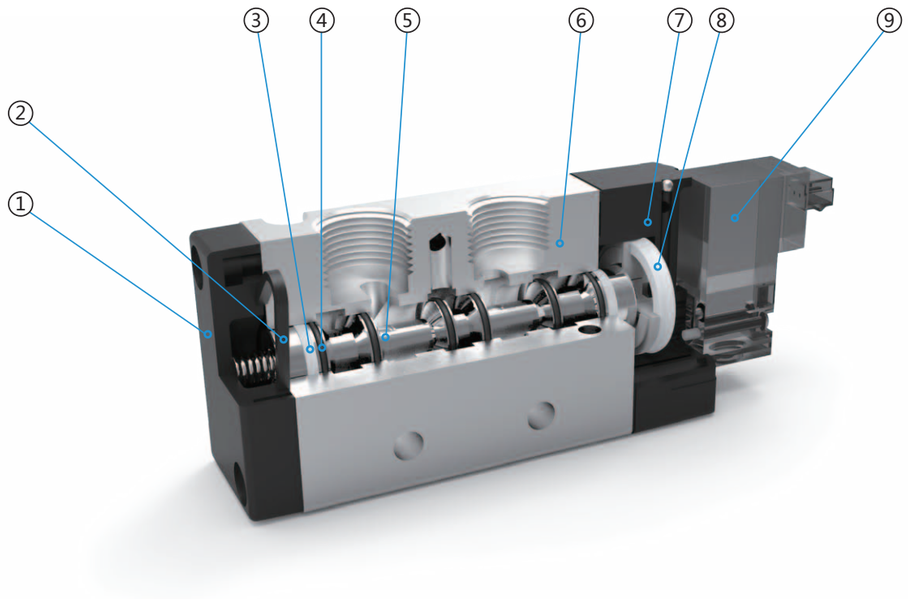

Parts

Number	Name	Number	Name
1	Back cover	6	Valve body
2	Diamond ring	7	Pilot valve base
3	Anti-friction seal	8	Piston
4	Flat ring	9	Armature
5	Valve spool		

Overall Dimension

5JV-110-M5

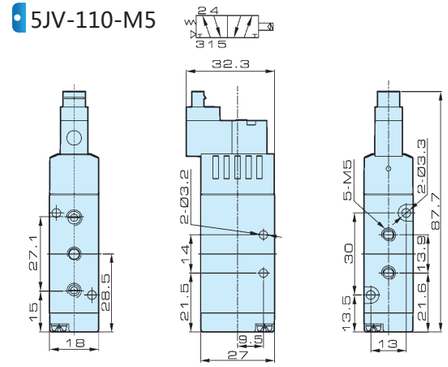

5JV-110-06

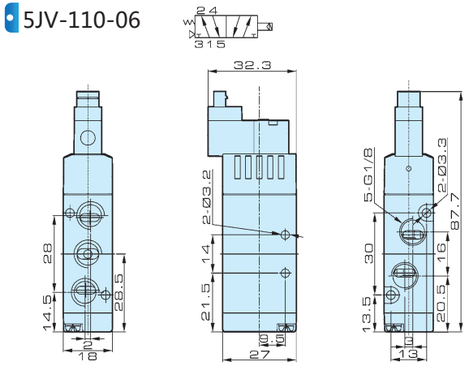

5JV-120-M5

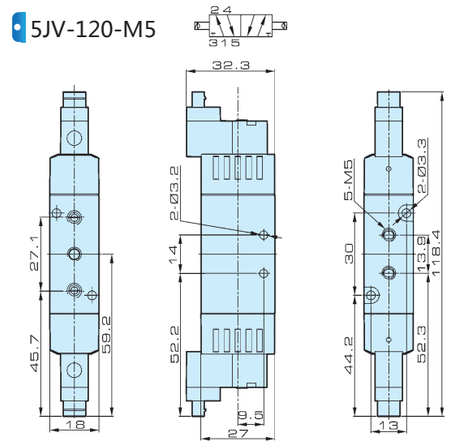

5JV-120-06

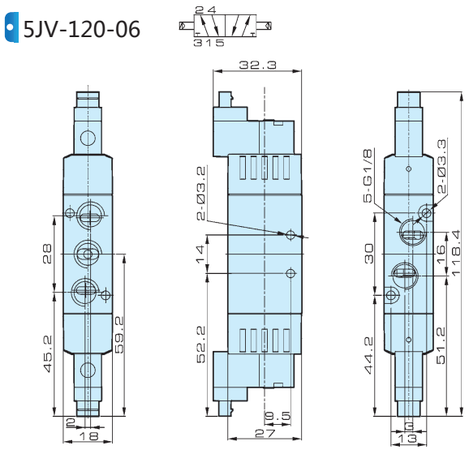

5JV-130-M5

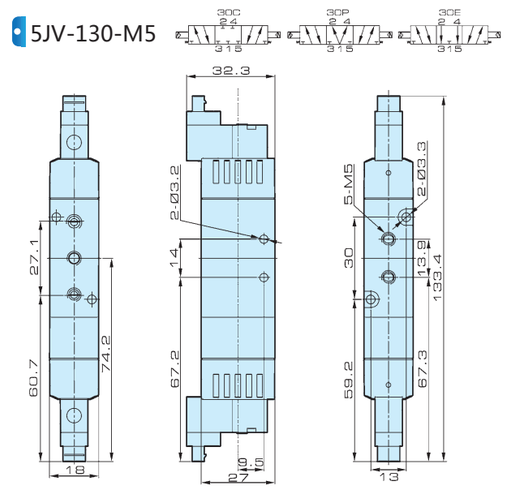

5JV-130-06

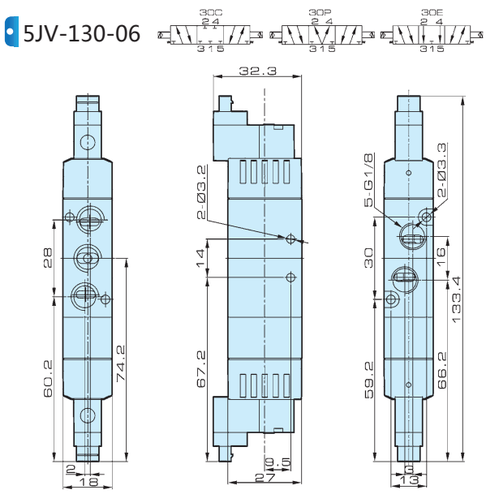

JELPC® | JELPC — China Pneumatic

ISO9001:2008 CE

5JV Series
Solenoid Valve

Valve
J4V100
J4V200
J4V300
J4V400
SV
5V100
5V200
5V300
5V400
Manifold
MCS
JVT307
JSY
5JV
JEL
MVSD
VF
BM
551
JEL10
3VJZF
Diaphragm
JELVD
JELMP
JELP/G
Coil
3V1
2P
2V
2W
2W(Big)
2L
VX
PU
PU225
2Q
JEL5404
JEL6213
BU
Pulse
JEL.JZF
4H
TSV
MPV
4HV
HV, K
4R
4F210
FV
MSV
JM
ASC, RE
QE, QEA
ST
HSV

Overall Dimension

5JV-210-06

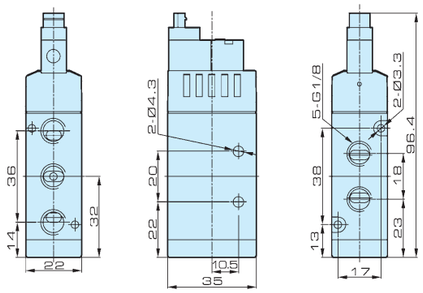

5JV-210-08

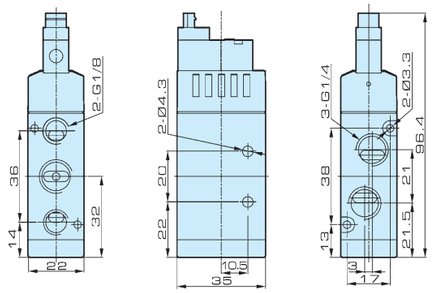

5JV-220-06

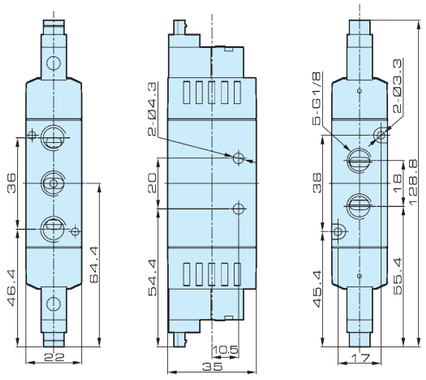

5JV-220-08

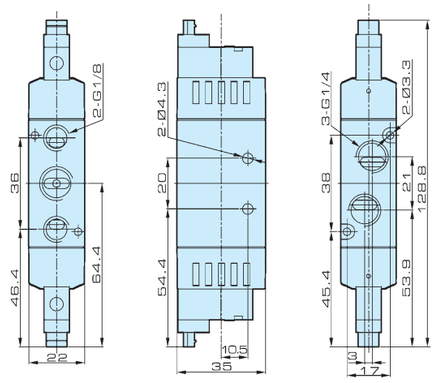

5JV-230-06

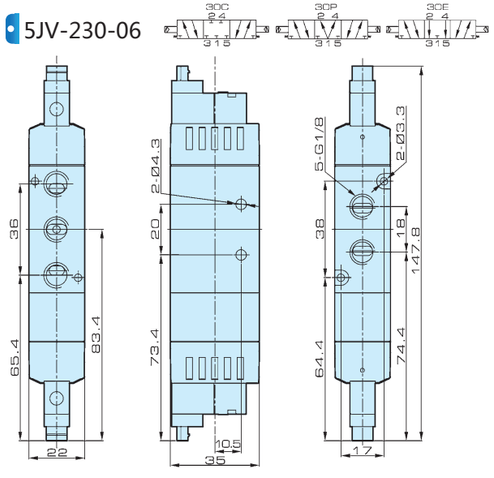

5JV-230-08

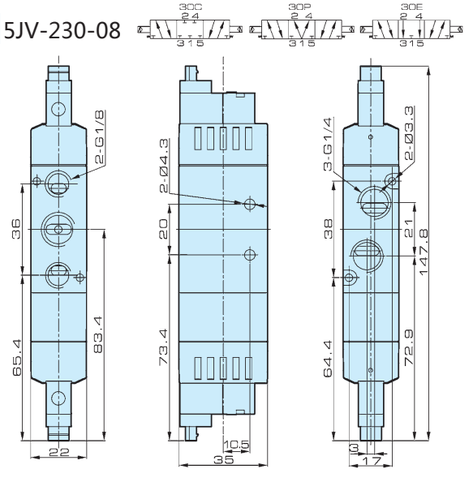

Overall Dimension

5JV-210-06B

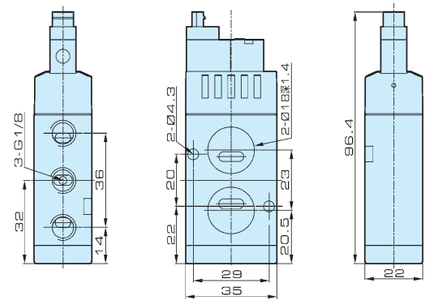

5JV-210-08B

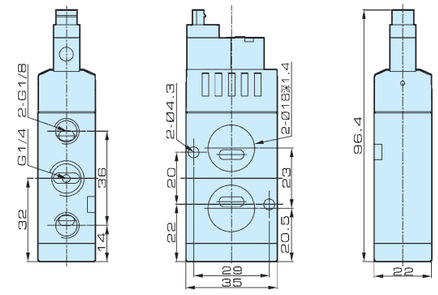

5JV-220-06B

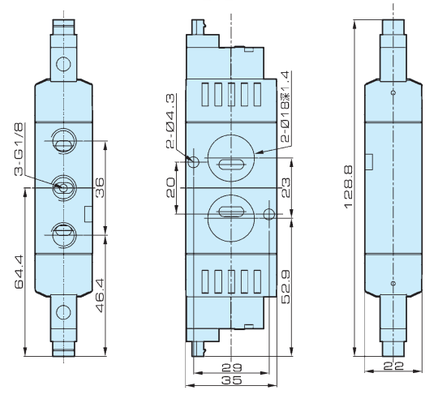

5JV-220-08B

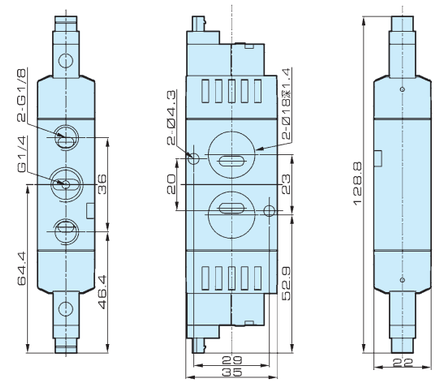

5JV-230-06B

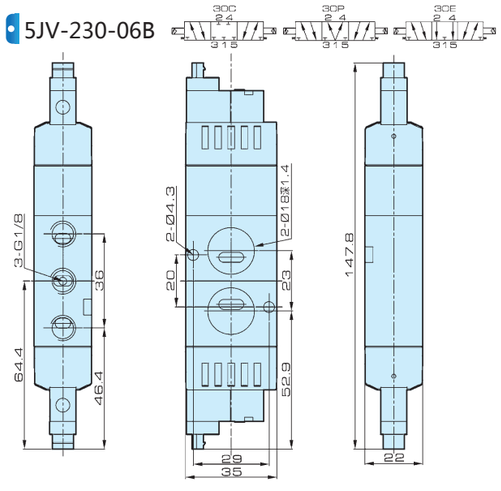

5JV-230-08B

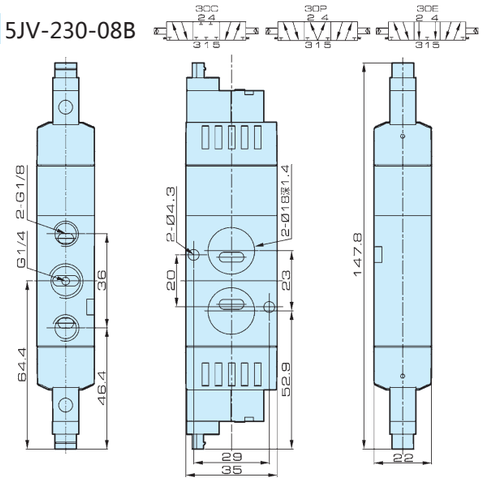

Valve
J4V100
J4V200
J4V300
J4V400
SV
5V100
5V200
5V300
5V400
Manifold
MCS
JVT307
JSY
5JV
JEL
MVSD
VF
BM
551
JEL10
3VJZF
Diaphragm
JELVD
JELMP
JELP/G
Coil
3V1
2P
2V
2W
2W(Big)
2L
VX
PU
PU225
2Q
JEL5404
JEL6213
BU
Pulse
JEL.JZF
4H
TSV
MPV
4HV
HV, K
4R
4F210
FV
MSV
JM
ASC, RE
QE, QEA
ST
HSV

JELPC — China Pneumatic

Ordering Code

JEL	-	V	-	52	-	2	-	S	-	AC220V	-	W
JELPC		Type		Position and Way		Port Size		Coil and Places		Standard Voltage		Wiring
		V: Solenoid valve		52: 5/2 Way		1: G 1/8"		10: Single coil		DC12V DC24V		Blank: Without light terminal
		A: Air pilot valve		53: 5/3 Way		2: G 1/4"		20: Double coil		AC24V 50Hz/60Hz		LD: Brown with light terminal
						3: G 3/8"		30C: Mid-position closed		AC110V 50Hz/60Hz		LD1: White with light terminal
						4: G 1/2"		30E: Mid-position exhausted		AC220V 50Hz/60Hz		W: Lead wire
								30P: Mid-position pressed		AC380V 50Hz/60Hz		

Specification

Model	JELV521S	JELV521D	JELV531C (E/P)	JELV522S	JELV522D	JELV532C (E/P)	JELV523S	JELV523D	JELV533C (E/P)	JELV524S	JELV524D	JELV534C (E/P)
	JELA521S	JELA521D	JELA531C (E/P)	JELA522S	JELA522D	JELA532C (E/P)	JELA523S	JELA523D	JELA533C (E/P)	JELA524S	JELA524D	JELA534C (E/P)
Valve Type	5/2 Way		5/3 Way	5/2 Way		5/3 Way	5/2 Way		5/3 Way	5/2 Way		5/3 Way
Effective Cross Section Area	12 mm^2 (CV = 0.67)		9 mm^2(CV=0.5)	14 mm^2 (CV = 0.78)		12 mm^2(CV=0.69)	25 mm^2 (CV = 1.40)		18 mm^2(CV=1.00)	50 mm^2 (CV = 2.79)		30 mm^2(CV=1.68)
Working Medium	40 Micron Filtered Air											
Operation	Internal piloted											
Working-pressure	0.15 ~ 0.8 MPa											
Max. Test Pressure	1.2 MPa											
Max. Ambient Temperature	-20 ~ 70℃											
Operating Voltage Tolerance	± 10%											
Power Consumption	AC: 5.5 VA DC: 4.8 W											
Connector Protection	F Class, IP 65											
Wiring / Connector	Cable / Lead Wire or DIN Connector											
Switching Frequency	5 Cycles / Sec.											
Response Time	0.05 Sec.											

Overall Dimension

JEL521S

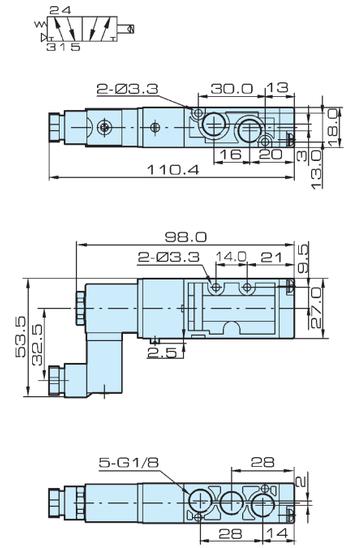

JEL521D

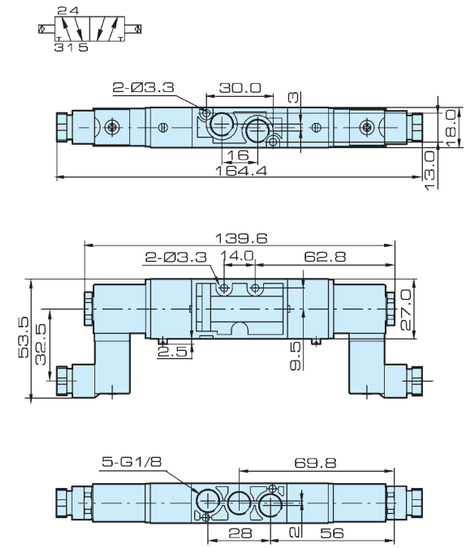

JEL522S

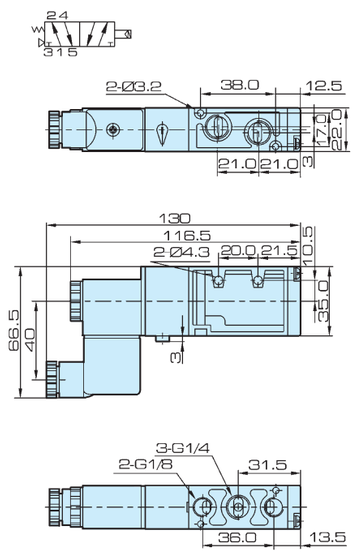

JEL522D

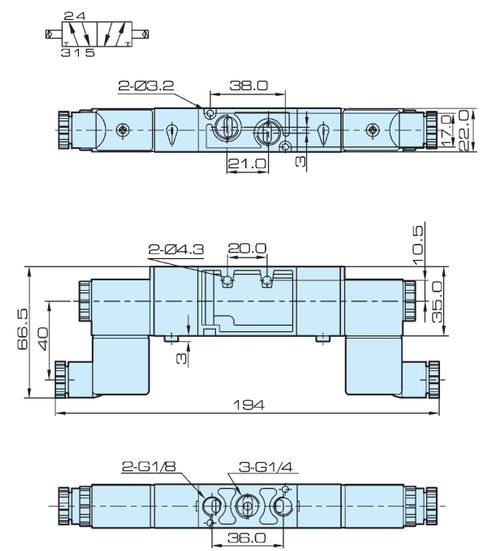

Valve
J4V100
J4V200
J4V300
J4V400
SV
5V100
5V200
5V300
5V400
Manifold
MCS
JVT307
JSY
5JV
JEL
MVSD
VF
BM
551
JEL10
3VJZF
Diaphragm
JELVD
JELMP
JELP/G
Coil
3V1
2P
2V
2W
2W(Big)
2L
VX
PU
PU225
2Q
JEL5404
JEL6213
BU
Pulse
JEL.JZF
4H
TSV
MPV
4HV
HV, K
4R
4F210
FV
MSV
JM
ASC, RE
QE, QEA
ST
HSV

Valve
J4V100
J4V200
J4V300
J4V400
SV
5V100
5V200
5V300
5V400
Manifold
MCS
JVT307
JSY
5JV
JEL
MVSD
VF
BM
551
JEL10
3VJZF
Diaphragm
JELVD
JELMP
JELP/G
Coil
3V1
2P
2V
2W
2W(Big)
2L
VX
PU
PU225
2Q
JEL5404
JEL6213
BU
Pulse
JEL.JZF
4H
TSV
MPV
4HV
HV, K
4R
4F210
FV
MSV
JM
ASC, RE
QE, QEA
ST
HSV

Overall Dimension

JEL523S

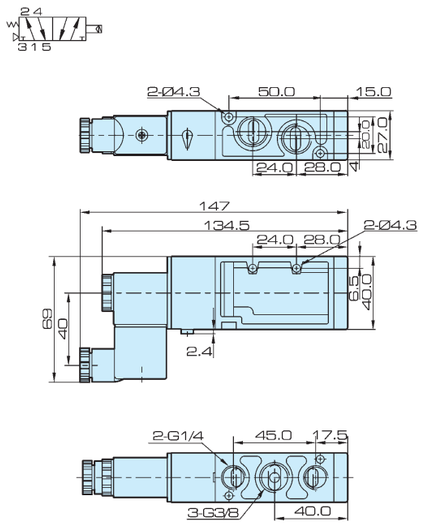

JEL523D

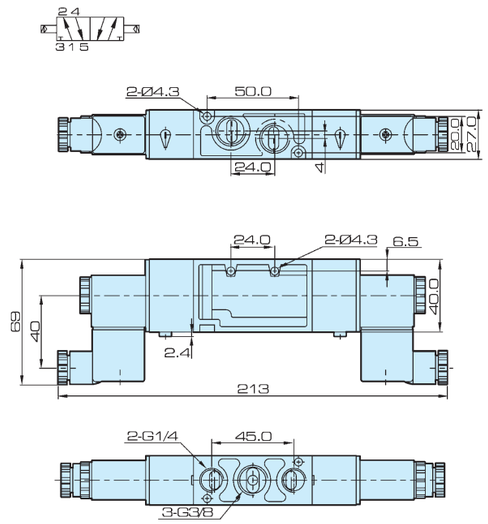

JEL524S

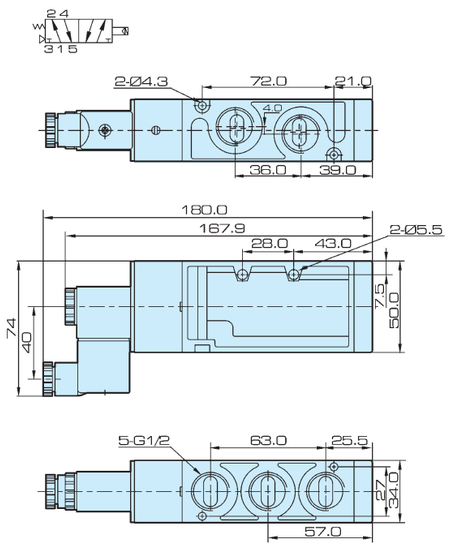

JEL524D

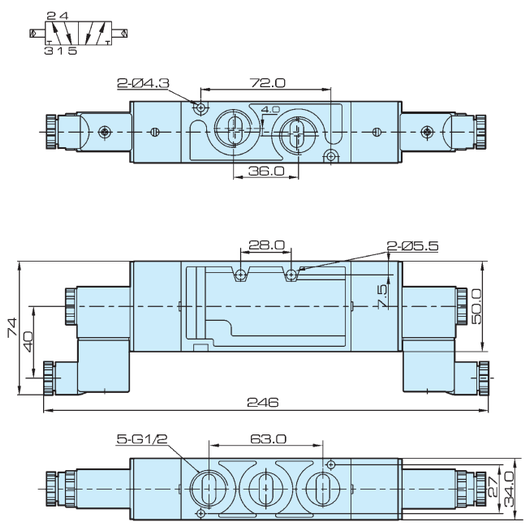

MVSD-260-4E1

MVSD-300-4E1

MVSD-600-4E1

Ordering Code

MVSD	-	260	-	4	-	E2	-	AC110V	-	W
Code		Body Width		4:5 Way		Stop Type		Standard Voltage		Wiring
		260: 26 mm				E1: Single coil		DC12V DC24V		Blank: Without light terminal
		300: 30 mm				E2: Double coil		AC24V 50Hz/60Hz		LD: Brown with light terminal
		600: 68 mm						AC110V 50Hz/60Hz		LD1: White with light terminal
								AC220V 50Hz/60Hz		W: Lead wire
								AC380V 50Hz/60Hz		

Specification

Item	MVSD-260-4E1	MVSD-260-4E2	MVSD-260-4E2 (C.P.E)	MVSD-300-4E1	MVSD-300-4E2	MVSD-300-4E2 (C.P.E)	MVSD-600-4E1	MVSD-600-4E2
No. of Position	2	2	3	2	2	3	2	
No. of Port	5			3	5		5	
Port Size	G 1/4"			G 3/8"			G 3/4"	G 1"
Working medium	Air							
Working Pressure	0.2 ~ 0.7 MPa		0.3 ~ 0.7 MPa	0.2 ~ 0.7 MPa		0.3 ~ 0.7 MPa	0.2 ~ 0.7 MPa	
Max. Test Pressure	10 kgf/cm^2							
Effective Cross Section Area	18 mm^2		16 mm^2	35 mm^2		25 mm^2	20: 115 mm^2 25: 135 mm^2	
Ambient Temperature	-20 ~ 70℃ (No Freezing)							
Power Consumption	AC: 5.5 VA DC: 4.8 W						AC: 13 VA DC: 10 W	
Operating Voltage Tolerance	± 10%							
Insulation Class	IP 65, F Class							

Valve
J4V100
J4V200
J4V300
J4V400
SV
5V100
5V200
5V300
5V400
Manifold
MCS
JVT307
JSY
5JV
JEL
MVSD
VF
BM
551
JEL10
3VJZF
Diaphragm
JELVD
JELMP
JELP/G
Coil
3V1
2P
2V
2W
2W(Big)
2L
VX
PU
PU225
2Q
JEL5404
JEL6213
BU
Pulse
JEL.JZF
4H
TSV
MPV
4HV
HV, K
4R
4F210
FV
MSV
JM
ASC, RE
QE, QEA
ST
HSV

Overall Dimension

MVSD260-4E1

MVSD300-4E1

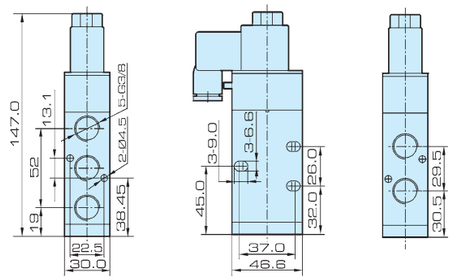

MVSD600-4E1

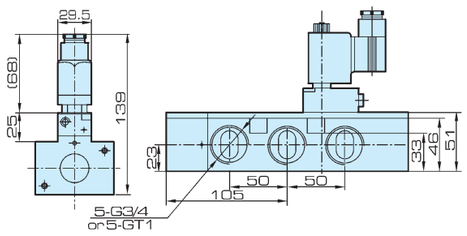

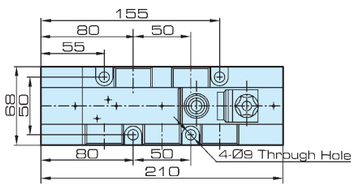

MVSD600-4E2

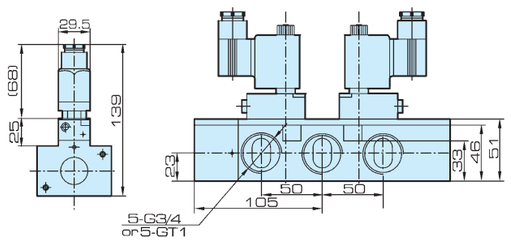

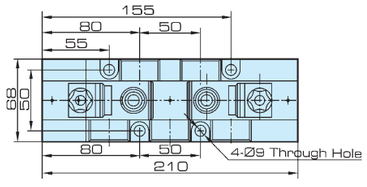

VF3130

VF3330

VF5120

VF3130

VF3230

Ordering Code

VF3	-	1	-	30	-	AC110V	-	W	-	F
Series		Coil and Initial Status		Ordering Number		Standard Voltage		Wiring		Joint
VF3 Series		1: Single coil		VF3: 30		DC12V DC24V		Blank: Without light terminal		1F-20F
VF5 Series		2: Double coil		VF5: 20		AC24V 50Hz/60Hz		LD: Brown with light terminal		
		3: Mid-position Closed				AC110V 50Hz/60Hz		LD1: White with light terminal		
		4: Mid-position Pressed				AC220V 50Hz/60Hz		W: Lead wire		
		5: Mid-position Exhausted				AC380V 50Hz/60Hz				

Specification

Model	VF3130	VF3230	VF33(4/5)30	VF5120	VF5220	VF53(4/5)50
Valve Type	5/2 way		5/3 way	5/2 way		5/3 way
Effective Cross Section Area	16 mm^2 (CV = 0.89)		12mm^2(CV=0.67)	25 mm^2 (CV = 1.40)		18 mm^2(CV=1.00)
Working Medium	40 Micron Filtered Air					
Operation	Internal Piloted					
Working-pressure	0.15 ~ 0.8 MPa					
Max. Test Pressure	1.2 MPa					
Ambient Temperature	-20 ~ 70℃					
Operating Voltage Tolerance	± 10%					
Power Consumption	AC: 5.5 VA DC: 4.8 W					
Protect Class	F Class, IP 65					
Wiring / Connector	Cable / Lead Wire or DIN Connector					
Switching Frequency	5 Cycles / Sec.					
Response Time	0.05 Sec.					

Base Ordering Code

VF3000M	-	□F
Series		Joint Base Number
VF3000M : VF3 Series		VF3000M : 1~20 F
VF5000M : VF5 Series		VF5000M : 1~20 F

Valve
J4V100
J4V200
J4V300
J4V400
SV
5V100
5V200
5V300
5V400
Manifold
MCS
JVT307
JSY
5JV
JEL
MVSD
VF
BM
551
JEL10
3VJZF
Diaphragm
JELVD
JELMP
JELP/G
Coil
3V1
2P
2V
2W
2W(Big)
2L
VX
PU
PU225
2Q
JEL5404
JEL6213
BU
Pulse
JEL.JZF
4H
TSV
MPV
4HV
HV, K
4R
4F210
FV
MSV
JM
ASC, RE
QE, QEA
ST
HSV

Valve
J4V100
J4V200
J4V300
J4V400
SV
5V100
5V200
5V300
5V400
Manifold
MCS
JVT307
JSY
5JV
JEL
MVSD
VF
BM
551
JEL10
3VJZF
Diaphragm
JELVD
JELMP
JELP/G
Coil
3V1
2P
2V
2W
2W(Big)
2L
VX
PU
PU225
2Q
JEL5404
JEL6213
BU
Pulse
JEL.JZF
4H
TSV
MPV
4HV
HV, K
4R
4F210
FV
MSV
JM
ASC, RE
QE, QEA
ST
HSV

Overall Dimension

VF3130

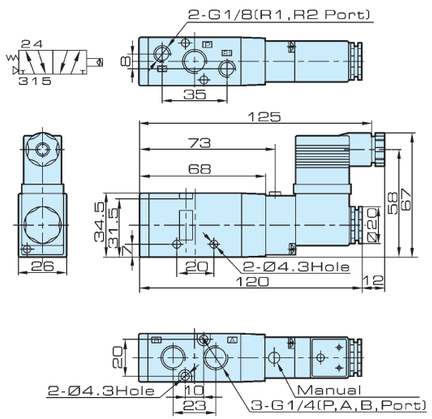

VF3230

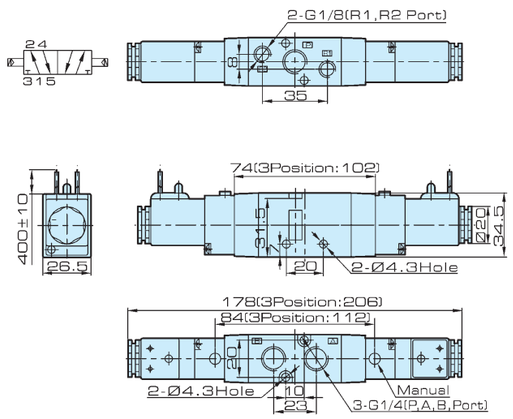

VF5120

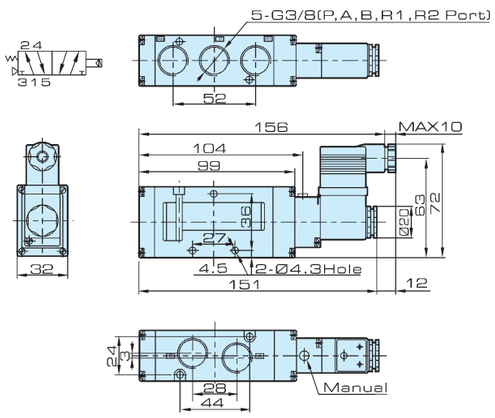

VF5220

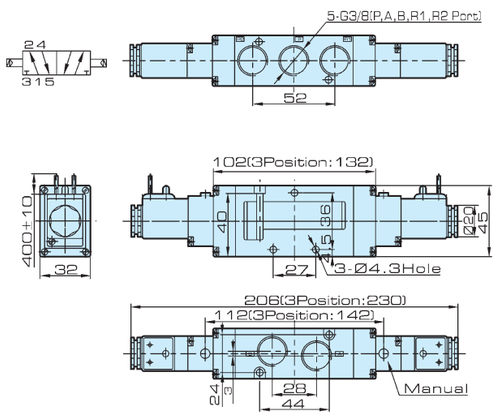

VF3000M

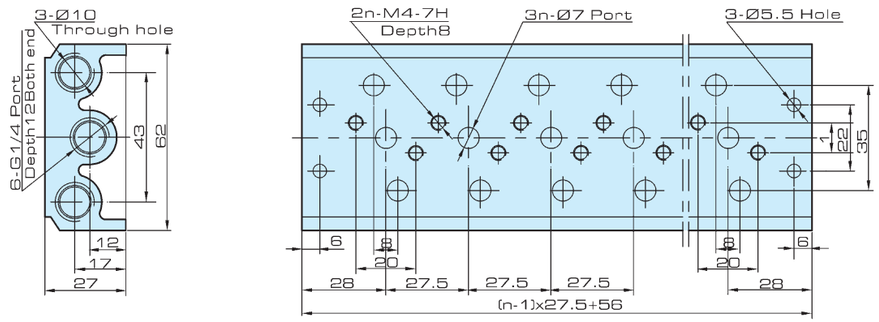

VF5000M

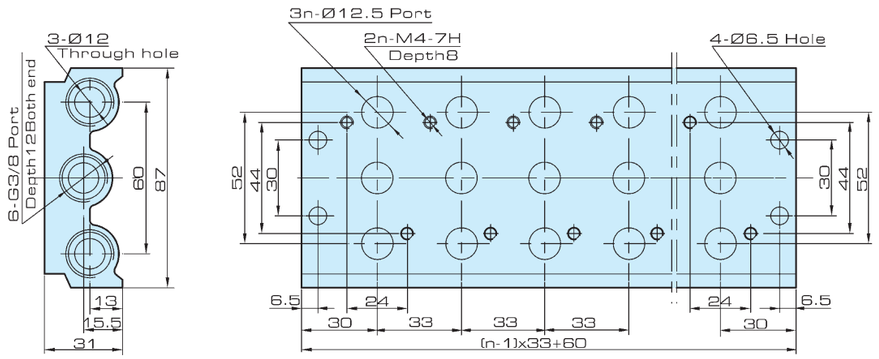

JELPC® | JELPC — China Pneumatic

BM520

BM520D

Ordering Code

BM	-	520	-	D	-	F
Code		Series		Coil and Type		Joint
		520: 5/2 way 530: 5/3 way		Blank: Single coil and double position D: Double coils and double position T: Double coils triple position		1F-20F

Specification

Model	BM520	BM520D	BM520T
Valve Type	5/2 way		5/3 way
Effective Cross Section Area	16 mm^2(CV=0.89)		12 mm^2(CV=0.67)
Working Medium	40 Micron Filtered Air		
Operation	Internal Piloted		
Working-pressure	0.15 ~ 0.8 MPa		
Max. Test Pressure	1.2 MPa		
Max. Ambient Temperature	-20 ~ 70℃		
Operating Voltage Tolerance	± 10%		
Power Consumption	AC: 5.5 VA DC: 4.8 W		
Protect Class	F Class, IP 65		
Wiring / Connector	Cable / Lead Wire or DIN Connector		
Switching Frequency	5 Cycles / Sec.		
Response Time	0.05秒		

Overall Dimension

BM520

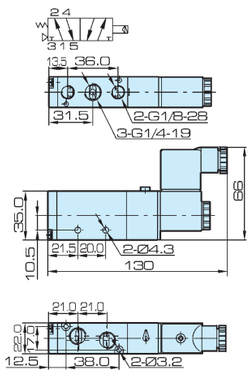

BM520D

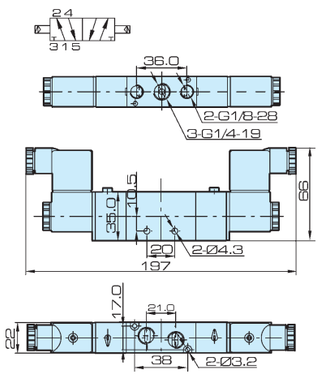

BM530T

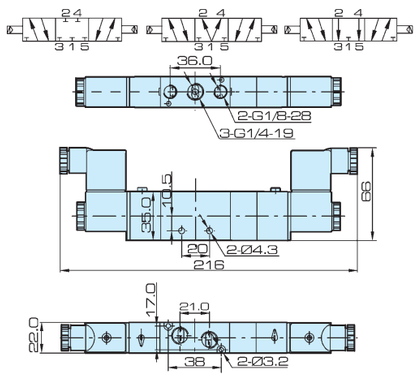

ISO9001:2008 CE

Features

1. Aluminum valve body, with thread connector and Namur interface.
2. A slide valve can be assembeled to 3/2 closed or 5/2 in order to contorol acting and single acting actuator.
3. With hand operator.
4. Coil can be rotated 360°.

European standard explosion-proof

American standard explosion-proof

Safe explosion-proof

Ordering Code

NAMUR551	-	G	-	A01	-	DC24V	-	E1
Series Code		Tube Form		Coil Type		Standard Voltage		Explosion Code
NAMUR551: 9mm inner hole coil NAMUR551B: 10mm inner hole coil		Blank: Subplate mounted G: Tube connection		A01: Single coil A02: Double coil		DC24V AC110V AC220V		Blank: Standard type E1: Safe explosion-proof E2: European standard explosion-proof E3: American standard explosion-proof

Install Instruction

2 way 5 position

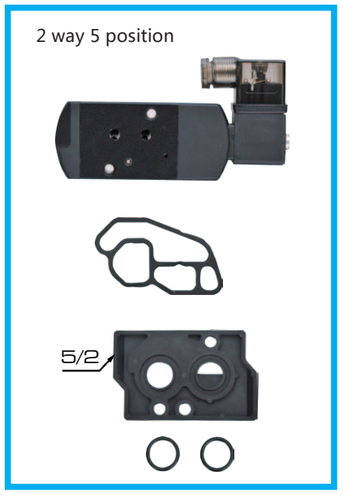

2 way 5 position

2 way 3 position

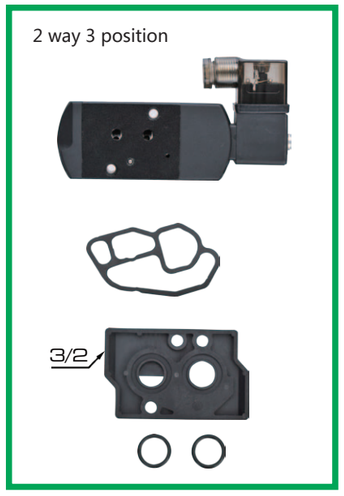

2 way 3 position

Symbol

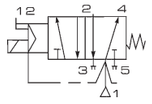

Single coil

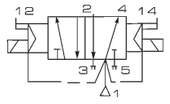

Double coil

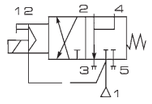

Single coil

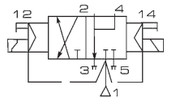

Double coil

Valve
J4V100
J4V200
J4V300
J4V400
SV
5V100
5V200
5V300
5V400
Manifold
MCS
JVT307
JSY
5JV
JEL
MVSD
VF
BM
551
JEL10
3VJZF
Diaphragm
JELVD
JELMP
JELP/G
Coil
3V1
2P
2V
2W
2W(Big)
2L
VX
PU
PU225
2Q
JEL5404
JEL6213
BU
Pulse
JEL.JZF
4H
TSV
MPV
4HV
HV, K
4R
4F210
FV
MSV
JM
ASC, RE
QE, QEA
ST
HSV

JELPC® | JELPC — China Pneumatic

Specification

Working Pressure	2-10bar
Max Pressure	10bar
Flow Rate	700L/min
Medium	Air, Clean air
Ambient Temperature	-25℃ to +60℃
Seal	NBR+PUR
Port Size	Inlet=G1/4" Exhaust=G1/8"

Feature

Coil Power	DC 3W; AC 4VA
Standard Voltage	DC24V; AC220V
Voltage Tolerance	±10%
Insulation Class	F
Protect Class	IP65
Operation	100%

Internal Structure

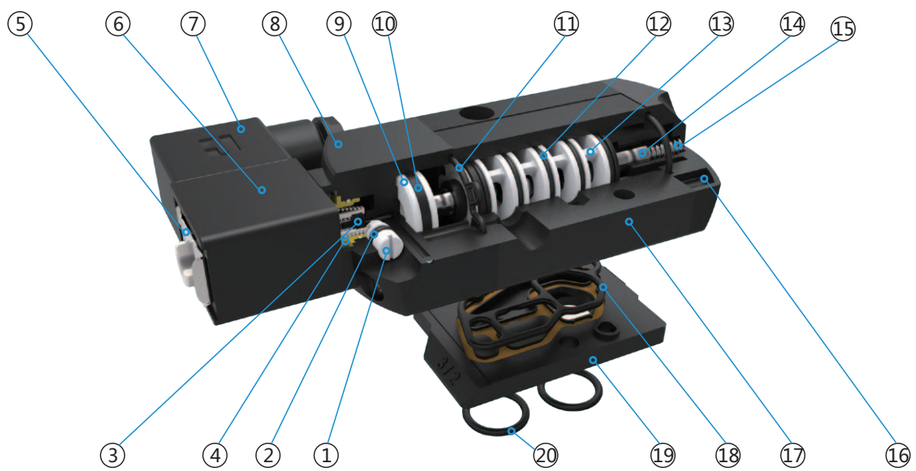

Parts

Number	Name	Number	Name
1	Mannual Ride Spindle	11	Seal
2	O ring	12	O ring
3	Seal	13	Sleeve
4	Spring	14	Spool
5	Clip	15	Spring
6	Coil	16	End-cap
7	Terminal	17	Body
8	Pilot Set	18	Seal
9	Piston	19	Corverting Plate
10	Piston Seal	20	O ring

ISO9001:2008 CE

Overall Dimension

NAMUR551-A01

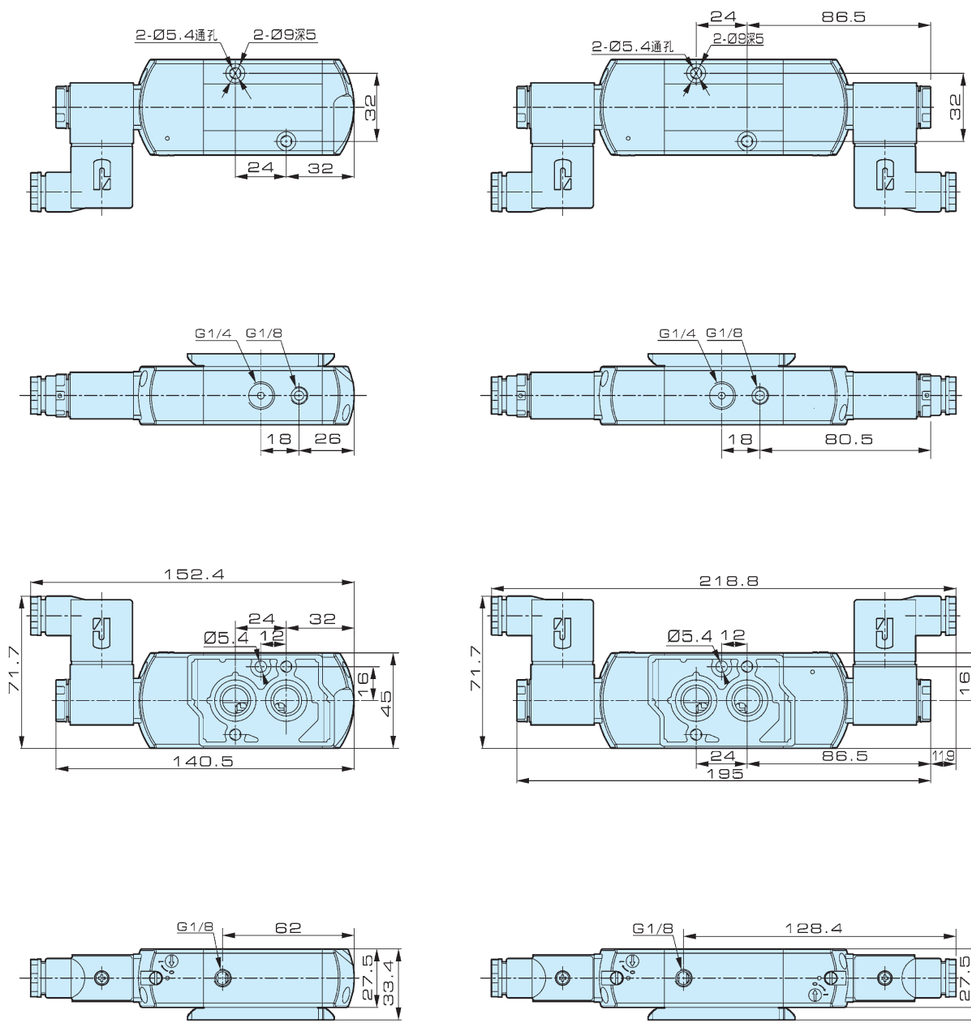

NAMUR551-A02

Valve
J4V100
J4V200
J4V300
J4V400
SV
5V100
5V200
5V300
5V400
Manifold
MCS
JVT307
JSY
5JV
JEL
MVSD
VF
BM
551
JEL10
3VJZF
Diaphragm
JELVD
JELMP
JELP/G
Coil
3V1
2P
2V
2W
2W(Big)
2L
VX
PU
PU225
2Q
JEL5404
JEL6213
BU
Pulse
JEL.JZF
4H
TSV
MPV
4HV
HV, K
4R
4F210
FV
MSV
JM
ASC, RE
QE, QEA
ST
HSV

JELPC® | JELPC — China Pneumatic

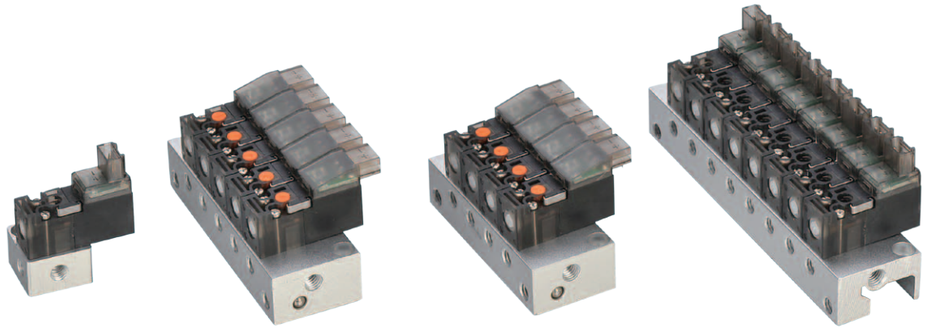

Features

1. Body material – import DuPont high-strength nylon from U.S. with low water absorption and wide temperature range from -40 ℃ ~120 ℃, to ensure dimensional stability.
2. Coil – Import lacquer wire from Germany and wind by high precise winding machine to be sure consistency. To use special plastic coating machine and moulds from Germany with segmented pressure control technology for temperature to reach critical dimension within a tolerance of ± 0.005.
3. Seal – main seal using deformation resistance of fluoro rubber imported from Japan, so that the entire valve temperature resistance can be -20 ° c ~100 ° c
4. Structure – non-tube structure with the high-strength skeleton material of high and low temperature resistance, low coefficient of anti-friction.
5. Assembly – semiautomatic assembly, with specially dedicated fixture to get theconsistency, more than 95% of assembly quality rate.
6. Leakage Inspection – 100% of automatic and manual test for leakage, and total internal and external leakage is less than 2ml/min.
7. Through this series of materials, processes and equipment guarantee, JEL10 miniature solenoid valve can be up to 100 million life times. The valve is mostly used in the textile industry, the medical device industry and the electronic industry.

Ordering Code

JEL	-	10	A	L	1	-	F
		Power	Voltage	Connecting	Wire length		Joint
		1.2W	A: DC24V	L : L	1 : 300mm		1F-20F
			B: DC12V	M : M	2 : 600mm		
					3 : Ribbon wire 300mm		
					4 : Ribbon wire 600mm		
					5 : Optional		

ISO9001:2008 CE

Specification

Model	JEL10
Type	3/2 Normal close
Fluid	Air, inert gas
Ambient And Fluid Temp.	-10℃ ~ +75℃
Working Pressure	0 ~ 7bar
Port Size	Φ0.7mm
P → A	CV:0.008
	b:0.11
A → R	CV:0.015
	b:0.35
Lubrication	Without

Coil Specification

Wiring	Vertical (L) Horizontal (M)
*Standard Voltage	DC24V / 12V
Voltage Pulsation	±10%
Power	1.2W
Insulation Grade	H
Life Cycle	>5000million times
Indicator	LED
Working Frequency	>30Hz
Response Time	6~8ms
Protection	Dust-proof

***Note: The valve won't work when polarity reversed.**

Overall Dimension

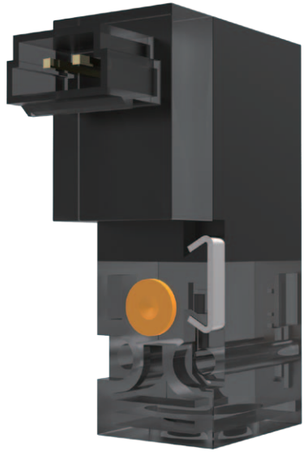

Connecting Type : L

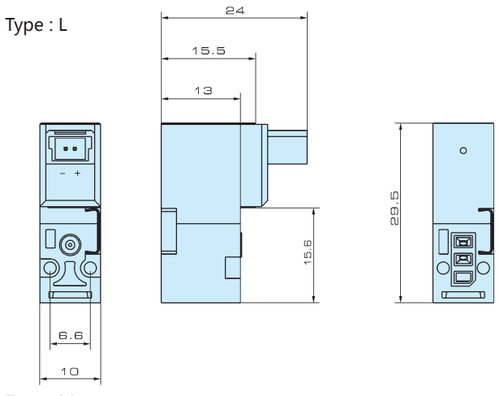

Connecting Type : M

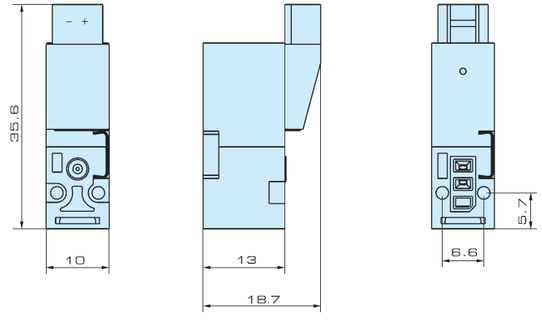

Valve
J4V100
J4V200
J4V300
J4V400
SV
5V100
5V200
5V300
5V400
Manifold
MCS
JVT307
JSY
5JV
JEL
MVSD
VF
BM
551
JEL10
3VJZF
Diaphragm
JELVD
JELMP
JELP/G
Coil
3V1
2P
2V
2W
2W(Big)
2L
VX
PU
PU225
2Q
JEL5404
JEL6213
BU
Pulse
JEL.JZF
4H
TSV
MPV
4HV
HV, K
4R
4F210
FV
MSV
JM
ASC, RE
QE, QEA
ST
HSV

JELPC — China Pneumatic

3AJZF-15

3VJZF-25

Ordering Code

3V	-	JZF	-	15	-	AS	-	AC110V	-	W
Specification		Stop Type		Port Size		Operation		Standard Voltage		Wiring
3V: 3/2 way solenoid valve		V: Solenoid valve		10: G 3/8"		Blank: Internal Piloted		DC12V DC24V		Blank: Without light terminal
3A: 3/2 way air pilot valve		A: Air Pilot valve		15: G 1/2"		AS: External Piloted		AC24V 50Hz/60Hz		LD: Brown with light terminal
				20: G 3/4"				AC110V 50Hz/60Hz		LD1: White with light terminal
				25: G 1"				AC220V 50Hz/60Hz		W: Lead wire
								AC380V 50Hz/60Hz		

Specification

Model	3VJZF-15/10	3VJZF-25/20	3AJZF-15/10	3AJZF-25/20
Working Medium	Air			
Operation	Stop Type			
Orifice	16 mm	25 mm	16 mm	25 mm
Port Size	G 1/2", G 3/8"	G 1", G 3/4"	G 1/2", G 3/8"	G 1", G 3/4"
Working-pressure	0 ~ 1.0 MPa			
Max. Test Pressure	1.5 MPa			
Operating Voltage Tolerance	± 10%			
Material of Body	Aluminum			

ISO9001:2008 CE

3VJZF Series
3/2 Way Stop Solenoid Valve

Overall Dimension

3VJZF-15

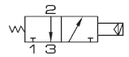

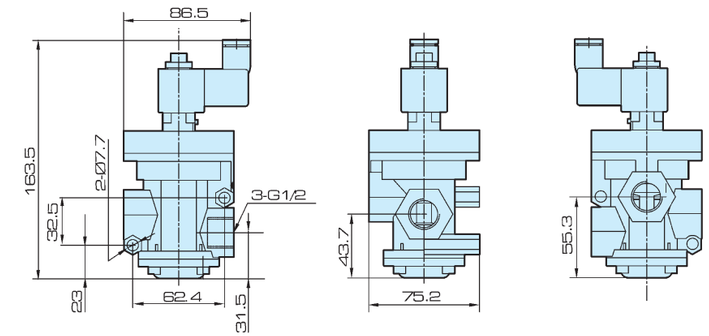

3VJZF-25

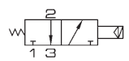

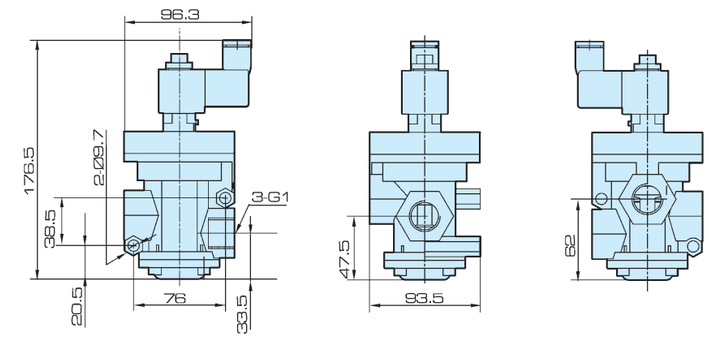

3AJZF-15

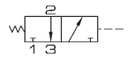

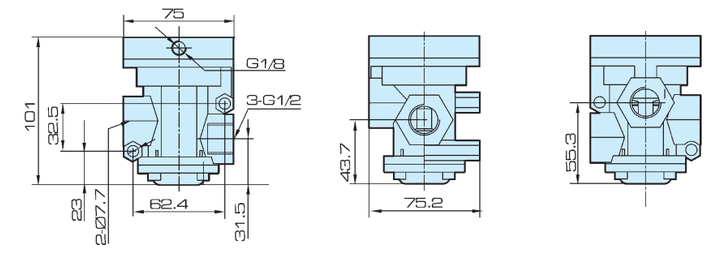

3AJZF-25

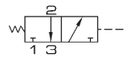

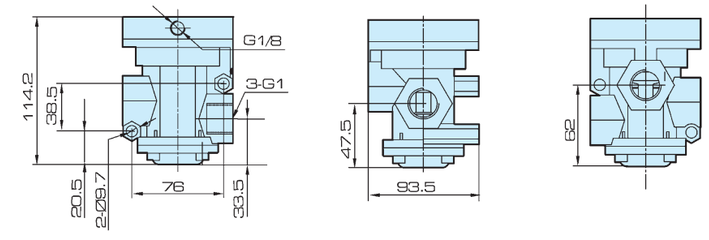

Valve
J4V100
J4V200
J4V300
J4V400
SV
5V100
5V200
5V300
5V400
Manifold
MCS
JVT307
JSY
5JV
JEL
MVSD
VF
BM
551
JEL10
3VJZF
Diaphragm
JELVD
JELMP
JELP/G
Coil
3V1
2P
2V
2W
2W(Big)
2L
VX
PU
PU225
2Q
JEL5404
JEL6213
BU
Pulse
JEL.JZF
4H
TSV
MPV
4HV
HV, K
4R
4F210
FV
MSV
JM
ASC, RE
QE, QEA
ST
HSV

JELPC — China Pneumatic

JEL-MP-08-FB2.8W/1.5W

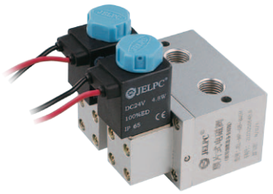
JEL-MP-08-BJSR

JEL-MP-08

JEL-MP-08-ZDKR

New practical national patent (Patent number: ZL03255648.9)
Awarded national new excellent product
Low pressure system valve for medical application
Special fomular silicone for longer service life.

Features

1. Adopt new processing, improved inner hole roughness.
2. Adopt specially formulated silicone to increase of service life.
3. To import German high standard special grease which provides film in order to reduce the friction.
4. Valve spool material use soft magnetic stainless steel from German, increase the magnetic properties and reduce the coil power to 30%.

Ordering Code

JEL	-	MP	-	08	-	ZDKR	-	DC12	-	W
JELPC		Diaphragm		Port Size		Fix Form		Standard Voltage		Wattage
				08: G1/4"		Standard		DC12V		Standard: 3W
						ZDKR		DC24V		Low Consumption: 1.5W
						BJSR				
						FB				

Symbol

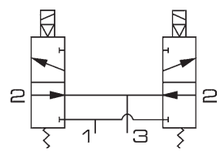

Specification

Model	JEL-MP-08
Valve Type	4/2 Way
Working Medium	40 Micron Filtered Air
Operation	Internal Piloted
Working-pressure	0.08 ~ 0.35 MPa
Ambient Temperature	-5 ~ 80 ℃
Protection Class	F Class, IP 65

ISO9001:2008 CE

Overall Dimension

JEL-MP-08

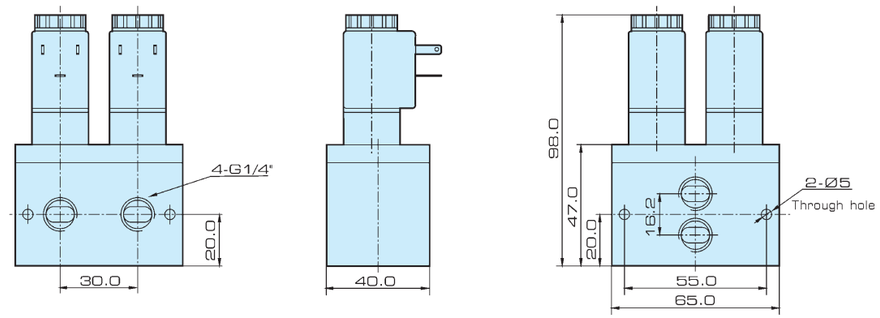

JEL-MP-08-BJSR

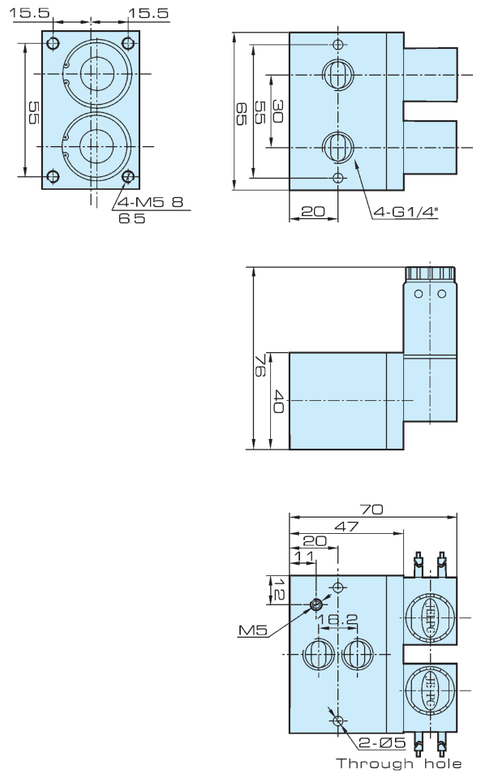

JEL-MP-08-ZDKR

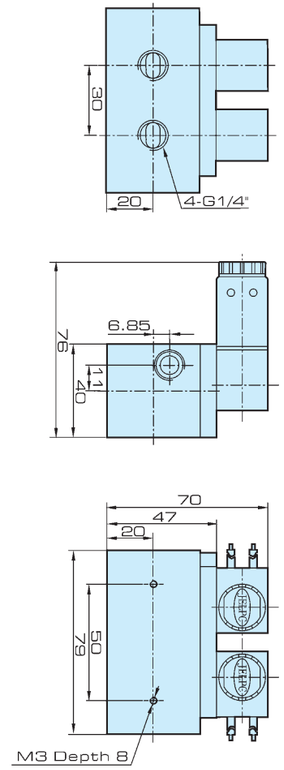

Valve
J4V100
J4V200
J4V300
J4V400
SV
5V100
5V200
5V300
5V400
Manifold
MCS
JVT307
JSY
5JV
JEL
MVSD
VF
BM
551
JEL10
3VJZF
Diaphragm
JELVD
JELMP
JELP/G
Coil
3V1
2P
2V
2W
2W(Big)
2L
VX
PU
PU225
2Q
JEL5404
JEL6213
BU
Pulse
JEL.JZF
4H
TSV
MPV
4HV
HV, K
4R
4F210
FV
MSV
JM
ASC, RE
QE, QEA
ST
HSV

JELPC® | JELPC — China Pneumatic

APPL: 201320234298.3

Features

1. Body with ceramic sliding structure to be abrasive and long service life.
2. Be able to work with 0 pressure or small flow condition with synchronous motor, without starting pressure.
3. To optimize internal structure to be max flow to satisfy with operating requirements of 0.5 ~ 5L/min oxygen concentrator.
4. Low consumption, to save energy.

Without flange

With flange

Ordering Code

JELVD	-	J2	-	9
Model		Mounting Type		RPM
JELVD Series		J1: Flange		9: 9 RPM
		J2: Inserting		5: 5 RPM

Specification

Valve type	JELVD Rotary Valve
Fluid	40μm filtered air
Working pressure	0~0.25MPa
Max pressure	0.4MPa
Speed	5r/min 8r/min (optional)
Flow feature	Input: 0.2MPa, Output: 0.1MPa 360L/min (ANR)
Ambient and fluid temperature	-5 ~ +80℃ (non-frozen)
Fixing form	Optional
Main parts material	6061, PA6, Silicon rubber, NBR, 304
Voltage	AC220V 50Hz
Voltage tolerance	±10%
Humidity	RH20% ~ 80%
Un-loading consumption	≤3W
Insulation grade	E

ISO9001:2008 CE

Internal Structure

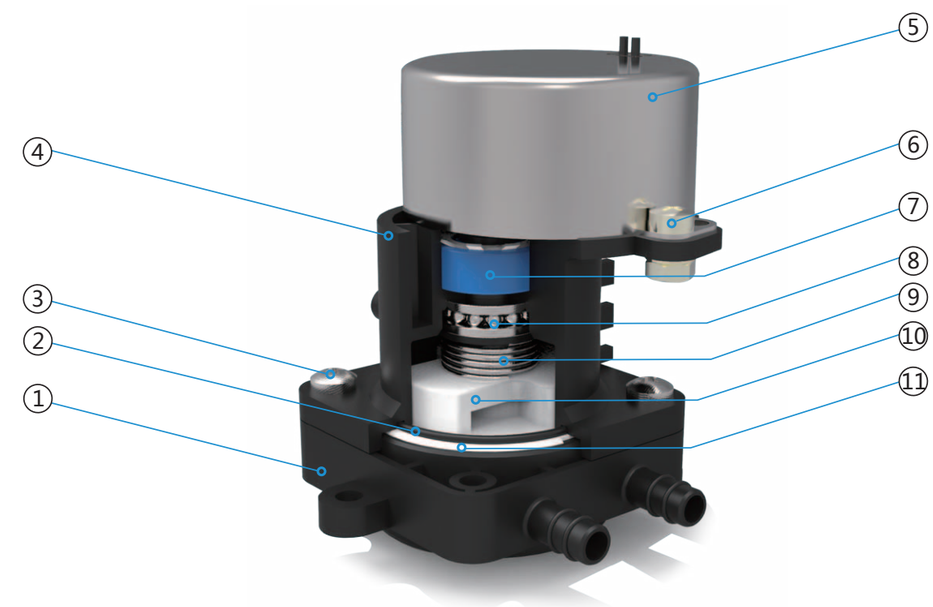

Parts

Number	Name	Number	Name
1	End cap	7	Coupling
2	O ring	8	Bearing
3	Screw	9	Spring
4	Top body	10	Top disc
5	Motor	11	Bottom disc
6	Screw		

Valve
J4V100
J4V200
J4V300
J4V400
SV
5V100
5V200
5V300
5V400
Manifold
MCS
JVT307
JSY
5JV
JEL
MVSD
VF
BM
551
JEL10
3VJZF
Diaphragm
JELVD
JELMP
JELP/G
Coil
3V1
2P
2V
2W
2W(Big)
2L
VX
PU
PU225
2Q
JEL5404
JEL6213
BU
Pulse
JELJZF
4H
TSV
MPV
4HV
HV, K
4R
4F210
FV
MSV
JM
ASC, RE
QE, QEA
ST
HSV

JELPC® | JELPC — China Pneumatic

Valve
J4V100
J4V200
J4V300
J4V400
SV
5V100
5V200
5V300
5V400
Manifold
MCS
JVT307
JSY
5JV
JEL
MVSD
VF
BM
551
JEL10
3VJZF
Diaphragm
JELVD
JELMP
JELP/G
Coil
3V1
2P
2V
2W
2W(Big)
2L
VX
PU
PU225
2Q
JEL5404
JEL6213
BU
Pulse
JEL.JZF
4H
TSV
MPV
4HV
HV, K
4R
4F210
FV
MSV
JM
ASC, RE
QE, QEA
ST
HSV

Overall Dimension

JELVD-J1

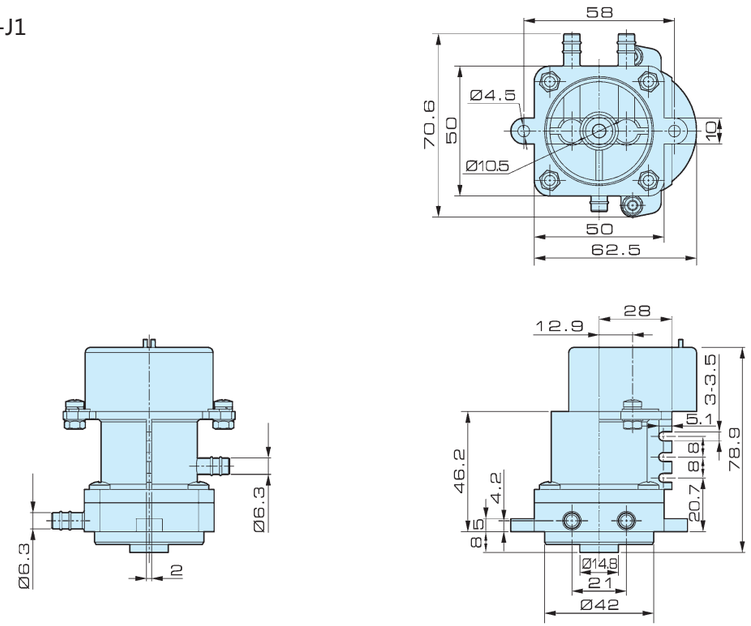

JELVD-J2

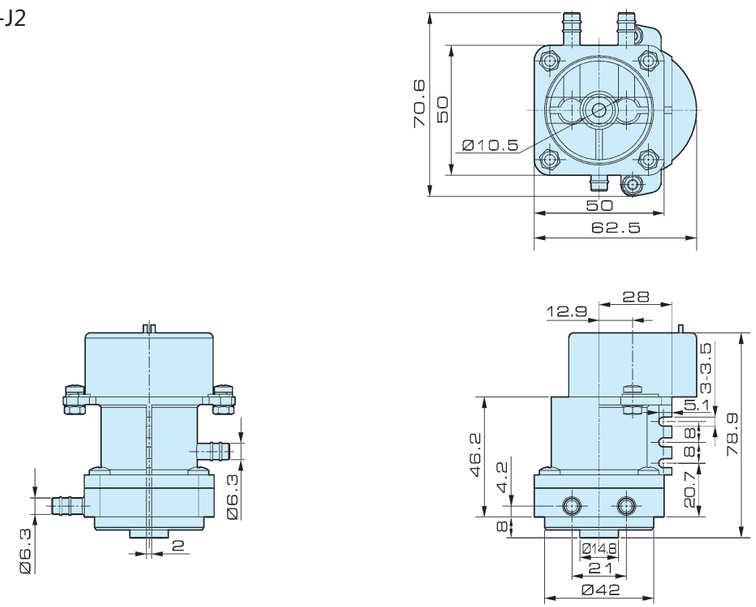

ISO9001:2008 CE

Special product

Suitable for the hydraulic system of automaic dumping automobiles, acting as the air resource for controlling hydraulic directional change valve.

JELTV301W2

JELMP301

Ordering Code

JELMP301 — Flange Type

JELTV301W2 — Basic Type

Symbol

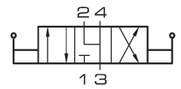

Specification

Model	Bore	Working Medium	Working Pressure Range	Medium Temperature	Ambient Temperature	Port Size
JELMP301	6 mm	Compressed Air	0 ~ 0.8 MPa	5 ~ 60℃	5 ~ 60℃	NPT 1/8"
JELTV301W2	6 mm		0 ~ 0.8 MPa	5 ~ 60℃	5 ~ 60℃	NPT 1/8"

Overall Dimension

JELMP301

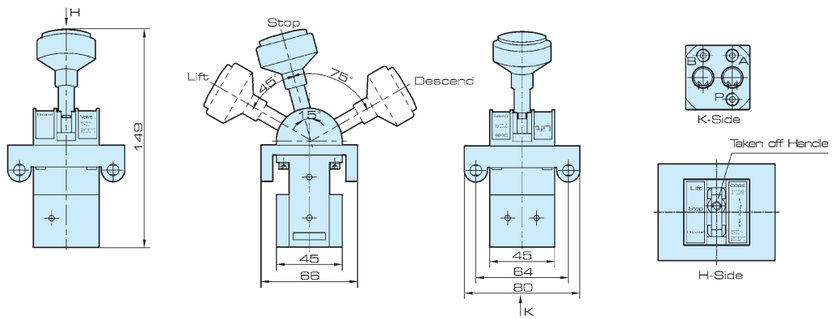

JELTV301W2

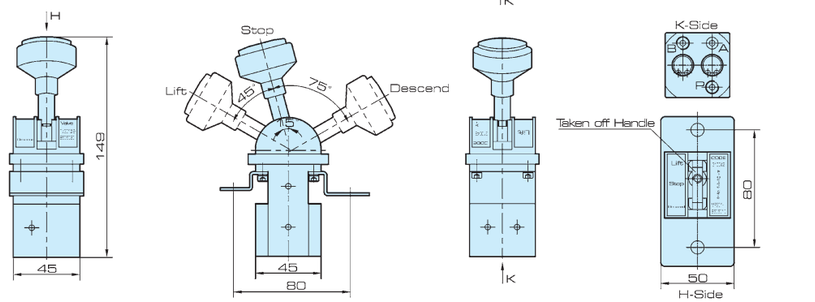

Valve
J4V100
J4V200
J4V300
J4V400
SV
5V100
5V200
5V300
5V400
Manifold
MCS
JVT307
JSY
5JV
JEL
MVSD
VF
BM
551
JEL10
3VJZF
Diaphragm
JELVD
JELMP
JELP/G
Coil
3V1
2P
2V
2W
2W(Big)
2L
VX
PU
PU225
2Q
JEL5404
JEL6213
BU
Pulse
JEL.JZF
4H
TSV
MPV
4HV
HV, K
4R
4F210
FV
MSV
JM
ASC, RE
QE, QEA
ST
HSV

Valve
J4V100
J4V200
J4V300
J4V400
SV
5V100
5V200
5V300
5V400
Manifold
MCS
JVT307
JSY
5JV
JEL
MVSD
VF
BM
551
JEL10
3VJZF
Diaphragm
JELVD
JELMP
JELP/G
Coil
3V1
2P
2V
2W
2W(Big)
2L
VX
PU
PU225
2Q
JEL5404
JEL6213
BU
Pulse
JEL.JZF
4H
TSV
MPV
4HV
HV, K
4R
4F210
FV
MSV
JM
ASC, RE
QE, QEA
ST
HSV

Special product

Ordering Code

JELP	-	3HA	-	2	-	20	-	08
Model		Specification		Series Code		Position Number		Port Size
JELP Hand Lever Air Control Valve		3HA: Air Control Valve		2: 2 Series		20: 3/2 way		08: 1/4"
JELG Air Control Valve								

JELG3HA220-08 Air Control Vlave

JELP3HA220-08 Hand Lever Air Control Valve

Specification

Model	Bore	Working Medium	Working Pressure Range	Medium Temperature	Ambient Temperature	Port Size
JELP-3HA220-08	7 mm	Compressed Air	0 ~ 0.8 MPa	-20 ~ +60℃	-10 ~ +60℃	NPT 1/4"
JELG-3HA220-08	7 mm	Compressed Air	0 ~ 0.8 MPa	-20 ~ +60℃	-10 ~ +60℃	NPT 1/4"

Overall Dimension

JELP-3HA220-08

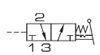

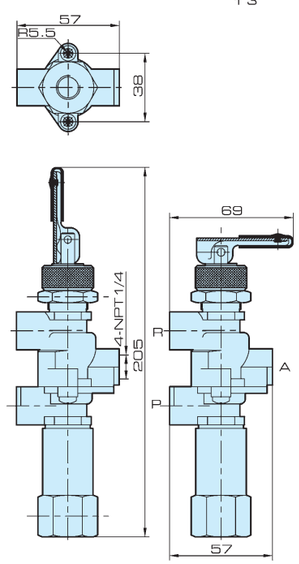

JELG-3HA220-08

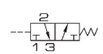

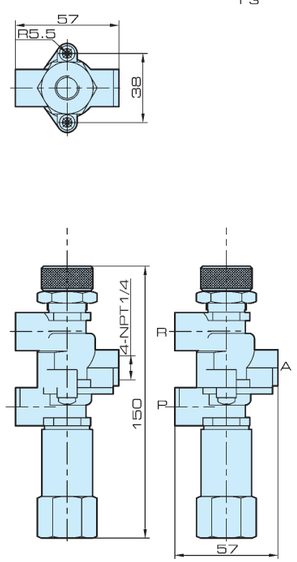

Coil

Ordering Code

100C	-	AC220V	-	W
Specification		Standard Voltage		Wiring Type
100C: Coils for 100 Series		DC12V DC24V		Blank: Standard Connector
200C: Coils for 200/300/400 Series		AC24V 50Hz/60Hz		LD: Brown with Light Terminal
		AC110V 50Hz/60Hz		LD1: White with Light Terminal
		AC220V 50Hz/60Hz		W: Lead Wire
		AC380V 50Hz/60Hz		

There are thermosetting type and thermoplastic type are available for option of coil.

Specification

*Amisco (Italy) or NASS (Germany) coil is available.

Model	100C	200C
Power	DC: 2.8W AC: 2.8VA	AC: 5.5VA DC: 4.8W
Operation	100% ED	
Working Voltage	AC:24V, 110V, 220V, 380V DC:12V, 24V	
Ambient Temperature	-30 ℃ ~ 70 ℃	
Protect Class	IP 65	
Insulation Class	F Class	
Wiring Form	Lead Wire Type, Connector Type	

* Customized power is available.

Seal Ring

*The key seals are imported from Japan or Germany.

Valve
J4V100
J4V200
J4V300
J4V400
SV
5V100
5V200
5V300
5V400
Manifold
MCS
JVT307
JSY
5JV
JEL
MVSD
VF
BM
551
JEL10
3VJZF
Diaphragm
JELVD
JELMP
JELP/G
Coil
3V1
2P
2V
2W
2W(Big)
2L
VX
PU
PU225
2Q
JEL5404
JEL6213
BU
Pulse
JEL.JZF
4H
TSV
MPV
4HV
HV, K
4R
4F210
FV
MSV
JM
ASC, RE
QE, QEA
ST
HSV

JELPC® | JELPC — China Pneumatic

3V1-06-4F

3V1-06

3V1-06A-2F

Features

1. We guarantee inner hole roughness within our new processing.
2. Can be assembling with many joints.
3. To import German soft magnetic stainless steel to improve the magnetic performance and reduce coil capacity 30% .

Ordering Code

3V	-	1	-	06	-	B	-	NC	-	AC220V	-	W	-	F
Specification		Series Code		Port Size		Connecting Type		Initial Status		Standard Voltage		Wiring		Joint
3V: 3/2 way		1: 100 Series		M5: M5 06: 1/8"		Blank: Pipe type B: Plate type A : Diecast body		NC: Normal close NO: Normal open		DC12V DC24V AC24V AC110V AC220V		Blank: Without light terminal LD: Brown with light terminal LD1: White with light terminal W: Lead wire		1F-20F

Note: Normal Open 3V1 valve' voltage only assembly DC24V 6.5W Coil

Specification

Model	3V1-M5	3V1-06(B/A)-NC	3V1-06(B/A)-NO
Working Medium	40 Micron Filtered Air		
Operation	Direct		
Port Size	M5	1/8" (Without or 1/8")	
Ambient Temperature	-10 ~ +60℃		
Gas Temperature	5 ~ 60℃		
Air Outlet Diameter	1.0mm		
Lubrication	Not Required		
Working-pressure	0 ~ 0.8 MPa		
Max. Test Pressure	1.2 MPa		
Power Consumption	AC: 5.5VA	DC: 4.8W	DC:6.5W
Protect Class	IP65		
Wiring / Connector	Cable / Lead Wire or DIN Connector		
Material of Body	Aluminum Alloy		
Switching Frequency	10 Cycles / Sec.		
Insulation	F Class		
Operating Voltage Tolerance	±10%		
Response Time	0.05 Sec.		
Flow Aperture	Ø1mm		

ISO9001:2008 CE

Internal Structure

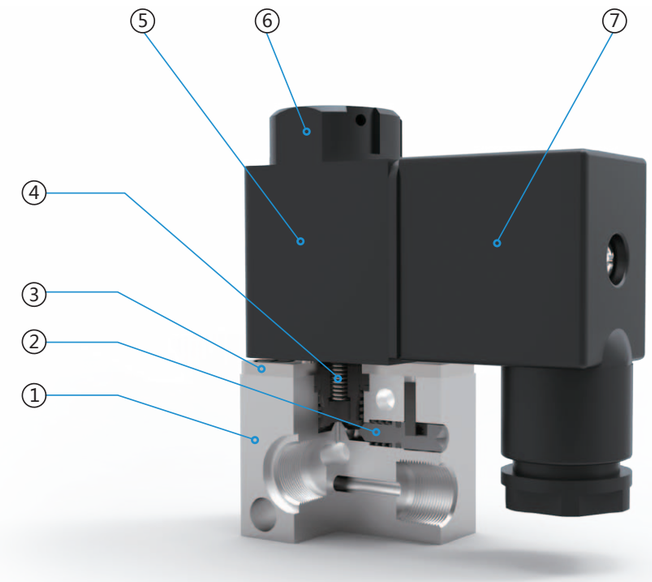

Parts

Number	Name	Number	Name
1	Valve body	5	Coil
2	Mannual ride spindle	6	Coil nut
3	Connecting part	7	Terminal
4	Solenoid plunger		

Flow Chart

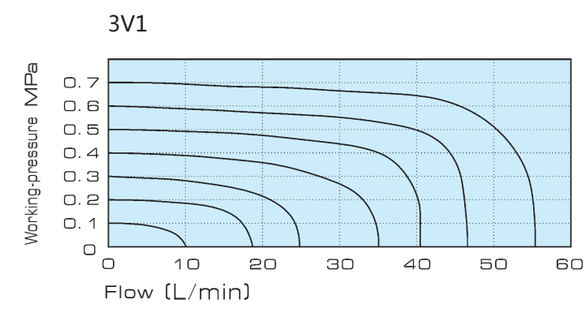

Valve
J4V100
J4V200
J4V300
J4V400
SV
5V100
5V200
5V300
5V400
Manifold
MCS
JVT307
JSY
5JV
JEL
MVSD
VF
BM
551
JEL10
3VJZF
Diaphragm
JELVD
JELMP
JELP/G
Coil
3V1
2P
2V
2W
2W(Big)
2L
VX
PU
PU225
2Q
JEL5404
JEL6213
BU
Pulse
JEL.JZF
4H
TSV
MPV
4HV
HV, K
4R
4F210
FV
MSV
JM
ASC, RE
QE, QEA
ST
HSV

JELPC — China Pneumatic

ISO9001:2008 CE

Valve
J4V100
J4V200
J4V300
J4V400
SV
5V100
5V200
5V300
5V400
Manifold
MCS
JVT307
JSY
5JV
JEL
MVSD
VF
BM
551
JEL10
3VJZF
Diaphragm
JELVD
JELMP
JELP/G
Coil
3V1
2P
2V
2W
2W(Big)
2L
VX
PU
PU225
2Q
JEL5404
JEL6213
BU
Pulse
JEL.JZF
4H
TSV
MPV
4HV
HV, K
4R
4F210
FV
MSV
JM
ASC, RE
QE, QEA
ST
HSV

Overall Dimension

3V1-06-NO

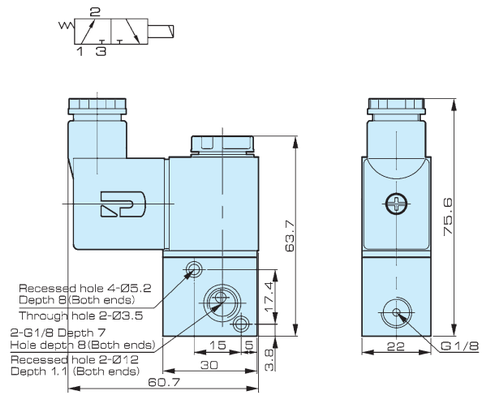

3V1-06-NO

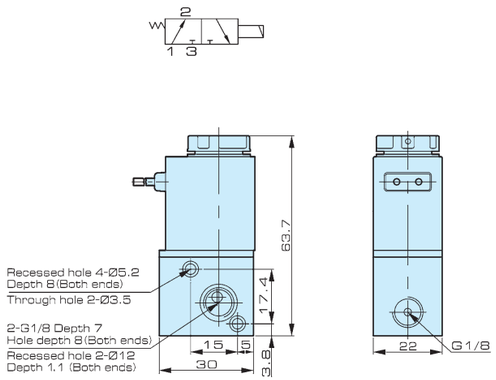

3V1-06

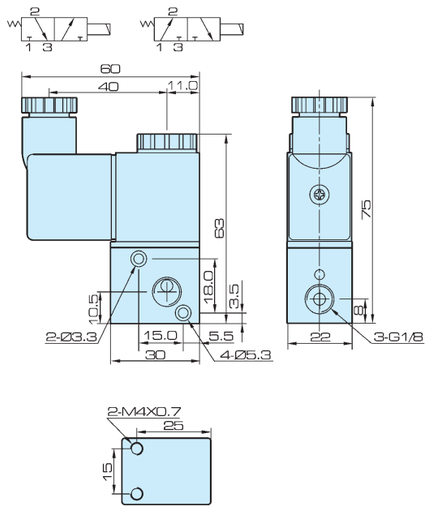

3V1-06A

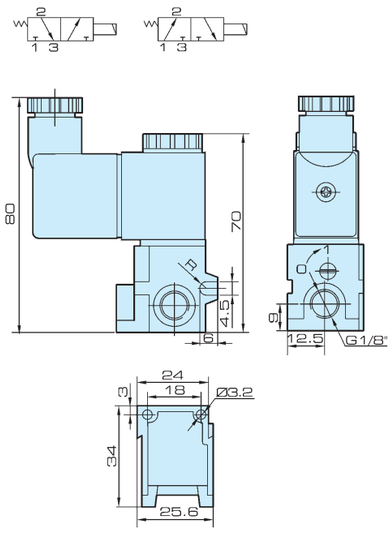

Overall Dimension

3V1-06-nF

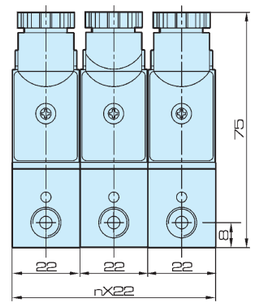

3V1-06A-nF

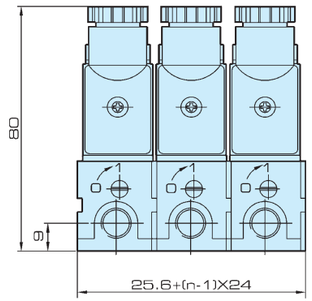

3V1-06B

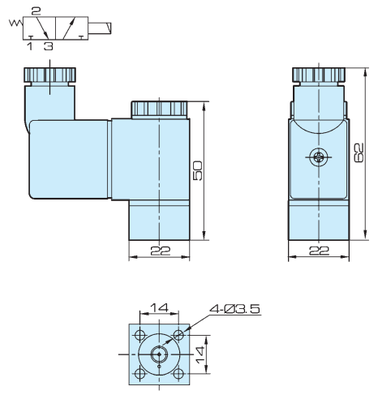

3V1-06B-nF

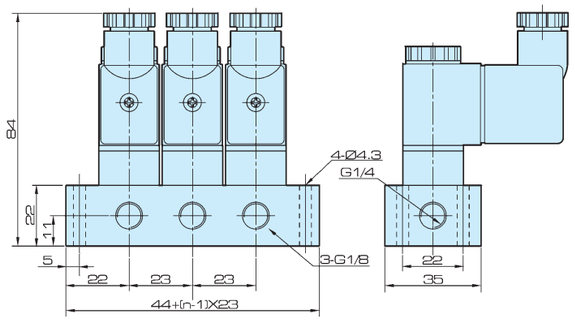

Valve
J4V100
J4V200
J4V300
J4V400
SV
5V100
5V200
5V300
5V400
Manifold
MCS
JVT307
JSY
5JV
JEL
MVSD
VF
BM
551
JEL10
3VJZF
Diaphragm
JELVD
JELMP
JELP/G
Coil
3V1
2P
2V
2W
2W(Big)
2L
VX
PU
PU225
2Q
JEL5404
JEL6213
BU
Pulse
JEL.JZF
4H
TSV
MPV
4HV
HV, K
4R
4F210
FV
MSV
JM
ASC, RE
QE, QEA
ST
HSV

2P Series
2/2 Way Solenoid Valve (Direct Operated)

JELPC® | JELPC — China Pneumatic

2P025-08

Ordering Code

2P	-	025	-	06	-	AC110V	-	W
Specification		Orifice Size		Port Size		Standard Voltage		Wiring
2P: 2/2 way		025: 2.5 mm		06: 1/8"		DC12V DC24V		Blank: Without light terminal
				08: 1/4"		AC24V 50Hz/60Hz		LD: Brown with light terminal
						AC110V 50Hz/60Hz		LD1: White with light terminal
						AC220V 50Hz/60Hz		W: Lead wire
						AC380V 50Hz/60Hz		

Symbol

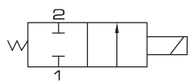

Specification

Model	2P025-06	2P025-08
Working Medium	Air, Water, Oil, Gas	
Operation	Direct	
Type	Normal Close	
Orifice	2.5 mm	
CV Value	0.23	
Port Size	1/8"	1/4"
Operation Fluid Viscosity	Below 20 CST	
Working-pressure	0～0.7 MPa	
Max. Test Pressure	1.0 MPa	
Max. Ambient Temperature	-10～80℃	
Operating Voltage Tolerance	± 10%	
Material of Body	Engineering Plastic	
Material of Oil Seal	NBR or VITON	

Overall Dimension

2P Series

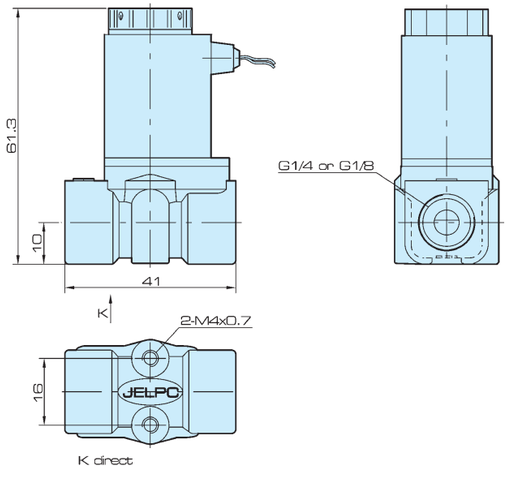

ISO9001:2008 CE

2V Series
2/2 Way Solenoid Valve

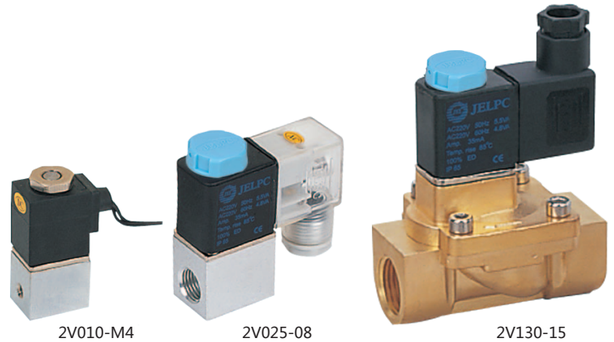

2V010-M4 2V025-08 2V130-15

Ordering Code

2V	-	025	-	06	-	AC110V	-	V
Specification		Orifice Size		Port Size		Standard Voltage		Sealing
2V: 2/2 way		010: 1.0 mm		M4: M4×0.7		DC12V DC24V		Blank: NBR
		025: 2.5 mm		06: 1/8"		AC24V 50Hz/60Hz		V: Viton (for high temperature gas)
		130: 13 mm		08: 1/4"		AC110V 50Hz/60Hz		
		250: 25 mm		10: 3/8"		AC220V 50Hz/60Hz		
				15: 1/2"		AC380V 50Hz/60Hz		
				20: 3/4"				
				25: 1"				

Symbol

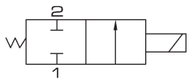

Specification

Model	2V010-M4	2V025-06	2V025-08	2V130-10	2V130-15	2V250-20	2V250-25
Working Medium	Air, Water, Oil						
Operation	Direct			Internal piloted			
Type	Normal Close						
Orifice	1.0mm	2.5mm		13mm		25mm	
CV Value	0.04	0.23		6.2		23	
Port Size	M4×0.7	1/8"	1/4"	3/8"	1/2"	3/4"	1"
Operation Fluid Viscosity	Below 20 CST						
Working-pressure	0.05～0.7 MPa						
Max. Test Pressure	1.2MPa	1.6MPa		1.0MPa			
Max. Ambient Temperature	-10～80℃						
Operating Voltage Tolerance	± 10%						
Protect Class	IP 65						
Power Consumption	AC: 6.5 VA DC: 6.5 W						
Insulation	F Class						
Material of Body	Aluminum or Brass (Nickel Plated)			Brass			
Material of Oil Seal	NBR Or VITON			NBR Or VITON			
Response Time	0.05 Sec.						

Valve
J4V100
J4V200
J4V300
J4V400
SV
5V100
5V200
5V300
5V400
Manifold
MCS
JVT307
JSY
5JV
JEL
MVSD
VF
BM
551
JEL10
3VJZF
Diaphragm
JELVD
JELMP
JELP/G
Coil
3V1
2P
2V
2W
2W(Big)
2L
VX
PU
PU225
2Q
JEL5404
JEL6213
BU
Pulse
JEL.JZF
4H
TSV
MPV
4HV
HV, K
4R
4F210
FV
MSV
JM
ASC, RE
QE, QEA
ST
HSV

Overall Dimension

2V010-M4

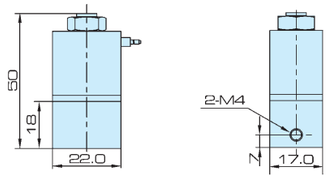

2V025-06
2V025-08

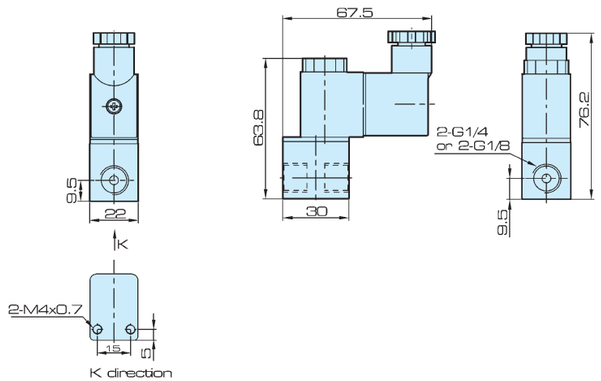

2V130-10
2V130-15

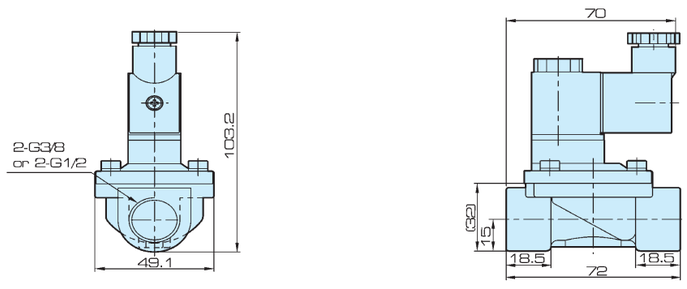

2V250-20
2V250-25

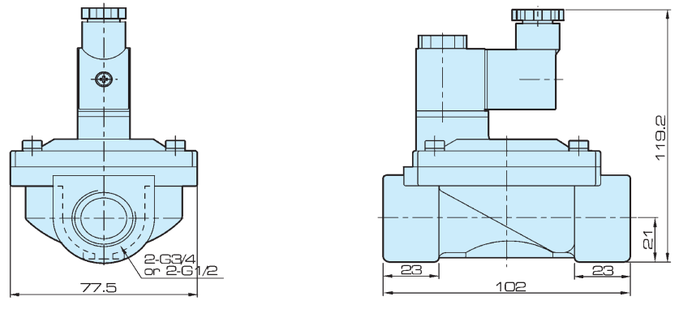

2W025-08

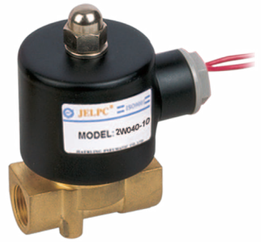

2W040-10

Ordering Code

2W	-	025	-	08	-	AC110V	-	E
Specification		Orifice Size		Port Size		Standard Voltage		Sealing
2W: 2/2 way brass body		012: 1.2mm		M4: M4×0.7		DC12V DC24V		Blank: NBR
2WH: 2/2 way brass body high pressure		020: 2mm		06: 1/8"		AC24V 50Hz/60Hz		E: EPDM (for steam)
2S: 2/2 way stainless steel body		025: 2.5mm		08: 1/4"		AC110V 50Hz/60Hz		V: VITON (for high temperature gas and vacuum)
2SH: 2/2 way stainless steel body high pressure		040: 4mm		10: 3/8"		AC220V 50Hz/60Hz		
						AC380V 50Hz/60Hz		

Symbol

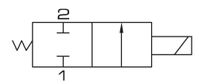

Specification

Model	2W025-06	2W025-08	2W040-10	2WH012-06	2WH012-08	2WH020-10
	2S025-06	2S025-08	2S040-10	2SH012-06	2SH012-08	2SH020-10
Working Medium	Air, Water, Oil, Gas			Air, Water, Oil		
Operation	Direct					
Type	Normal Close					
Orifice	2.5 mm		4 mm	1.2 mm		2 mm
CV Value	0.23		0.60	0.05		0.15
Port Size	1/8"	1/4"	3/8"	1/8"	1/4"	3/8"
Operation Fluid Viscosity	Below 20 CST					
Working-pressure	0～0.7 MPa			0～2.0 MPa		
Max. Test Pressure	1.0 MPa			3.5 MPa		
Max. Ambient Temperature	-10～80 ℃					
Operating Voltage Tolerance	± 10%					
Material of Body	2W: Brass 2S: Stainless Steel					
Material of Oil Seal	NBR, EPDM or VITON					

Valve
J4V100
J4V200
J4V300
J4V400
SV
5V100
5V200
5V300
5V400
Manifold
MCS
JVT307
JSY
5JV
JEL
MVSD
VF
BM
551
JEL10
3VJZF
Diaphragm
JELVD
JELMP
JELP/G
Coil
3V1
2P
2V
2W
2W(Big)
2L
VX
PU
PU225
2Q
JEL5404
JEL6213
BU
Pulse
JEL.JZF
4H
TSV
MPV
4HV
HV, K
4R
4F210
FV
MSV
JM
ASC, RE
QE, QEA
ST
HSV

JELPC® | JELPC — China Pneumatic

Valve
J4V100
J4V200
J4V300
J4V400
SV
5V100
5V200
5V300
5V400
Manifold
MCS
JVT307
JSY
5JV
JEL
MVSD
VF
BM
551
JEL10
3VJZF
Diaphragm
JELVD
JELMP
JELP/G
Coil
3V1
2P
2V
2W
2W(Big)
2L
VX
PU
PU225
2Q
JEL5404
JEL6213
BU
Pulse
JEL.JZF
4H
TSV
MPV
4HV
HV, K
4R
4F210
FV
MSV
JM
ASC, RE
QE, QEA
ST
HSV

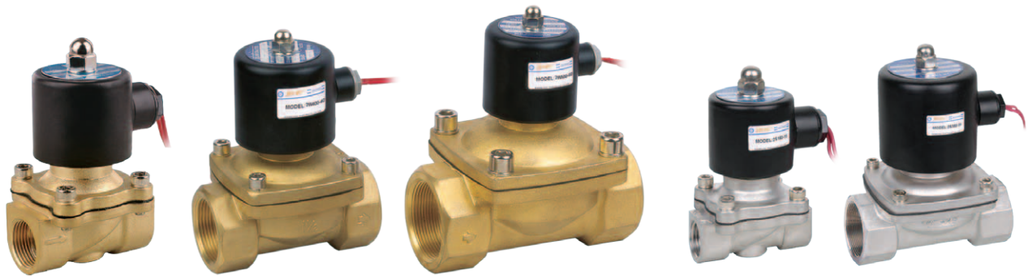

2W200-20 2W400-40 2W500-50 2S160-15 2S350-35

Ordering Code

2W	-	160	-	15	-	AC110V	-	V
Specification		Orifice Size		Port Size		Standard Voltage		Sealing
2W: 2/2 Way Solenoid Valve (Direct Operated)		160: 16 mm		10: 3/8"		DC12V DC24V		Blank : NBR
2S: 2/2 Way Stainless Steel Solenoid Valve (Direct Operated)		200: 20 mm		15: 1/2"		AC24V 50Hz/60Hz		V : VITON
		250: 25 mm		20: 3/4"		AC110V 50Hz/60Hz		(for high temperature
		350: 35 mm		25: 1"		AC220V 50Hz/60Hz		gas and vacuum)
		400: 40 mm		35: 1 1/4"		AC380V 50Hz/60Hz		
		500: 50 mm		40: 1 1/2"				
				50: 2"				

* In addition normally open optional.

Symbol

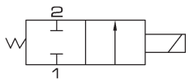

Specification

Model	2W160-10	2W160-15	2W200-20	2W250-25	2W350-35	2W400-40	2W500-50
	2S160-10	2S160-15	2S200-20	2S250-25	2S350-35	2S400-40	2S500-50
Working Medium	Air, Water, Oil						
Operation	Direct						
Type	Normal Close (Normal open optional)						
Orifice	16 mm		20 mm	25 mm	35 mm	40 mm	50 mm
CV Value	4.8		7.6	12	24	29	48
Port Size	3/8"	1/2"	3/4"	1"	1 1/4"	1 1/2"	2"
Operation Fluid Viscosity	Below 20 CST						
Working-pressure	Air 0 ~ 0.7 MPa; Water 0 ~ 0.5 MPa; Oil 0 ~ 0.5 MPa						
Max. Test Pressure	1.0 MPa						
Max. Ambient Temperature	-10 ~ 80 ℃						
Operating Voltage Tolerance	± 10%						
Material of Body	2W: Brass 2S: Stainless Steel						
Material of Oil Seal	NBR, EPDM or VITON						

ISO9001:2008 CE

2W (Large Port) Series
2/2 Way Solenoid Valve (Direct Operated)

Overall Dimension

2W025-06 & 2WH012-06

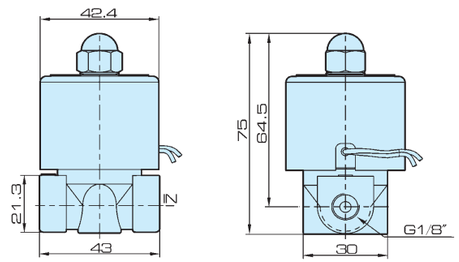

2W025-08 & 2WH012-08

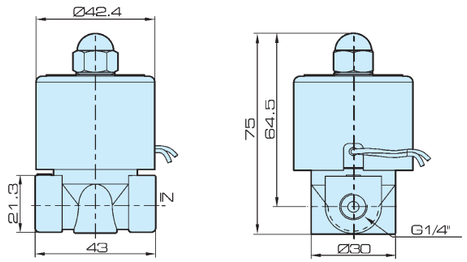

2W040-10 & 2WH20-10

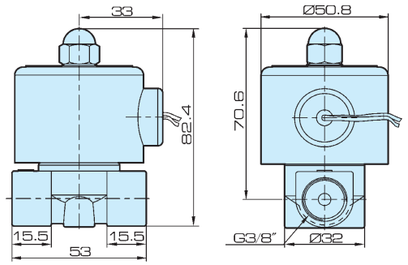

2W Big Caliber

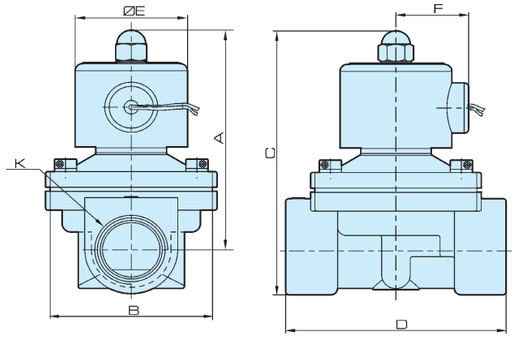

Dimension

Model	A	B	C	D	E	F	K
2W160-10	101.5	57	117	69	50	36	PT3/8"
2W160-15	101.5	57	117	69	50	36	PT1/2"
2W200-20	107	57	123.5	73	50	36	PT3/4"
2W250-25	111.5	73.5	134.5	99	50	36	PT1"
2W350-35	142	95	172	123	70.5	56	PT1 1/4"
2W400-40	142	95	172	123	70.5	56	PT1 1/2"
2W500-50	172	123	209	168	70.5	56	PT2"

Valve
J4V100
J4V200
J4V300
J4V400
SV
5V100
5V200
5V300
5V400
Manifold
MCS
JVT307
JSY
5JV
JEL
MVSD
VF
BM
551
JEL10
3VJZF
Diaphragm
JELVD
JELMP
JELP/G
Coil
3V1
2P
2V
2W
2W(Big)
2L
VX
PU
PU225
2Q
JEL5404
JEL6213
BU
Pulse
JEL.JZF
4H
TSV
MPV
4HV
HV, K
4R
4F210
FV
MSV
JM
ASC, RE
QE, QEA
ST
HSV

JELPC® | JELPC — China Pneumatic

2L170-15

2L170-20

2L200-25

2L300-40

Ordering Code

2L	-	170	-	15	-	AC110V
Specification		Orifice Size		Port Size		Standard Voltage
2L: 2/2 Way For Steam		170: 17 mm		10: 3/8"		DC12V DC24V
		200: 22 mm		15: 1/2"		AC24V 50Hz/60 Hz
		300: 30 mm		20: 3/4"		AC110V 50Hz/60 Hz
		500: 50 mm		25: 1"		AC220V 50Hz/60 Hz
				35: 1 1/4"		AC380V 50Hz/60 Hz
				40: 1 1/2"		
				50: 2"		

Symbol

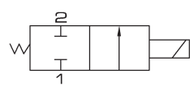

Specification

Model	2L170-10	2L170-15	2L170-20	2L200-25	2L300-35	2L300-40	2L500-50
Working Medium	Air, Water, Steam						
Operation	Direct						
Type	Normal Close						
Orifice	17 mm			22 mm	30 mm		50 mm
CV Value	4.8			12	20		48
Port Size	3/8"	1/2"	3/4"	1"	1 1/4"	1 1/2"	2"
Operation Fluid Viscosity	Below 20 CST						
Working-pressure	0.1 ~ 1.5 MPa						
Max. Test Pressure	2.25 MPa						
Max. Ambient Temperature	-10 ~ 180 ℃						
Operating Voltage Tolerance	± 10%						
Material of Body	Brass						
Material of Oil Seal	PTFE						

ISO9001:2008 CE

Overall Dimension

2L Series

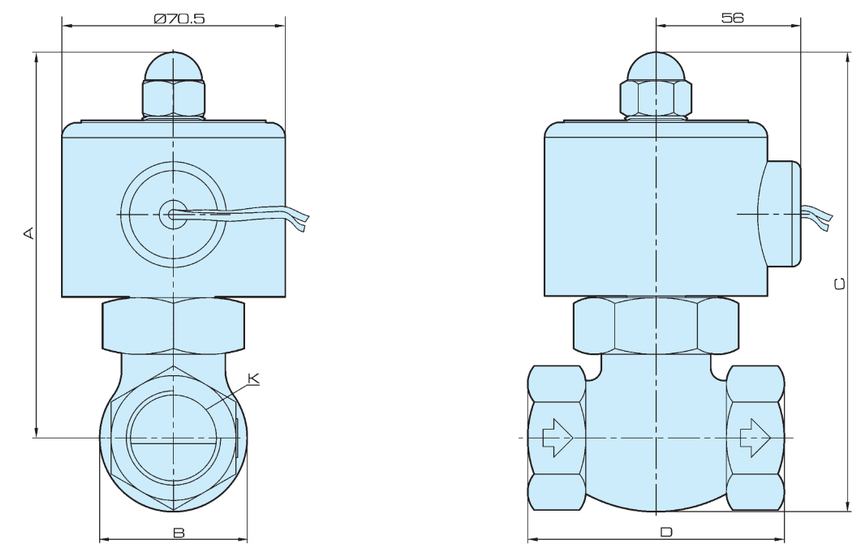

Dimension

Model	A	B	C	D	K
2L170-10	125	42	146	82	G3/8"
2L170-15	125	42	146	82	G1/2"
2L170-20	125	42	146	82	G3/4"
2L200-25	136	52	162	90.5	G1"
2L300-35	148	74	185	111	G1 1/4"
2L300-40	148	74	185	111	G1 1/2"
2L500-50	176	86	223	163	G2"

Valve
J4V100
J4V200
J4V300
J4V400
SV
5V100
5V200
5V300
5V400
Manifold
MCS
JVT307
JSY
5JV
JEL
MVSD
VF
BM
551
JEL10
3VJZF
Diaphragm
JELVD
JELMP
JELP/G
Coil
3V1
2P
2V
2W
2W(Big)
2L
VX
PU
PU225
2Q
JEL5404
JEL6213
BU
Pulse
JEL.JZF
4H
TSV
MPV
4HV
HV, K
4R
4F210
FV
MSV
JM
ASC, RE
QE, QEA
ST
HSV

VX Series
2/2 Way Solenoid Valve
(Direct Operated)

JELPC — China Pneumatic

Valve
J4V100
J4V200
J4V300
J4V400
SV
5V100
5V200
5V300
5V400
Manifold
MCS
JVT307
JSY
5JV
JEL
MVSD
VF
BM
551
JEL10
3VJZF
Diaphragm
JELVD
JELMP
JELP/G
Coil
3V1
2P
2V
2W
2W(Big)
2L
VX
PU
PU225
2Q
JEL5404
JEL6213
BU
Pulse
JEL.JZF
4H
TSV
MPV
4HV
HV, K
4R
4F210
FV
MSV
JM
ASC, RE
QE, QEA
ST
HSV

VX2120-08

VX2120-15

Ordering Code

VX2120	-	08	-	AC220V
Specification		Orifice Size		Standard Voltage
		06: 1/8"		DC12V DC24V
		08: 1/4"		AC24V 50Hz/60Hz
		10: 3/8"		AC110V 50Hz/60Hz
		15: 1/ 2"		AC220V 50Hz/60Hz
				AC380V 50Hz/60Hz

Symbol

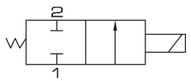

Specification

Model	VX2120-06	VX2120-08	VX2120-10	VX2120-15
Working Medium	Air, Water, Steam			
Operation	Direct			
Type	Normal Close			
Max. Test Pressure	1.05 MPa			
Working-pressure	0 ~ 1.0 MPa			
Orifice	3 mm		13 mm	
Port Size	1/8"	1/4"	3/8"	1/2"
Max. Ambient Temperature	-10 ~ 150 ℃		-10 ~ 80 ℃	
Material of Oil Seal	VITON		NBR	

Overall Dimension

VX

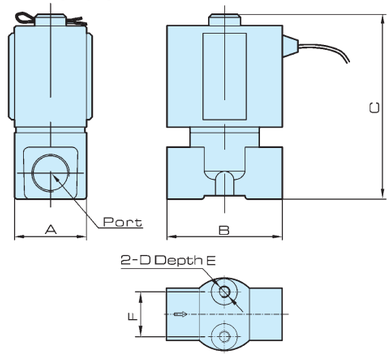

Dimension

Model	Bore	A	B	C	D	E	F
VX2120-06	PT1/8	25	40	64	M4	8	15.5
VX2120-08	PT1/4	25	40	64	M4	8	15.5
VX2120-10	PT3/8	48	68	110	-	-	-
VX2120-15	PT1/2	48	68	110	-	-	-

ISO9001:2008 CE

PU Series
2/2 Way Solenoid Valve
(Direct Operated)

PU220-04

PU220-06

PU220-08

Ordering Code

PU	-	220	-	01	-	AC110V	-	E
Specification		Operation		Port Size		Standard Voltage		Sealing
PU 2/2 Way		220: Direct		01: 1/8"		DC12V DC24V		Blank: NBR
				02: 1/4"		AC24V 50Hz/60Hz		E: EPDM for steam
				03: 3/8"		AC110V 50Hz/60Hz		V: VITON (for high temperature , gas , vacuum)
				04: 1/2"		AC220V 50Hz/60Hz		
				06: 3/4"		AC380V 50Hz/60Hz		
				08: 1"				

Symbol

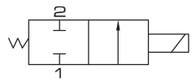

Specification

Model	PU220-01	PU220-02	PU220-03	PU220-04	PU220-06	PU220-08
Working Medium	Air, Water, Oil					
Operation	Direct					
Type	Normal Close					
Orifice	1.5mm	2.3mm	8.0mm	13mm	20mm	25mm
CV Value	0.10	0.18	1.00	4.00	8.60	11.00
Port Size	1/8"	1/4"	3/8"	1/2"	3/4"	1"
Operation Fluid Viscosity	Below 50 CST					
Working-pressure	0 ~ 0.7 MPa					
Max. Test Pressure	1.05 MPa					
Max. Ambient Temperature	-10 ~ 80 ℃					

Overall Dimension

PU

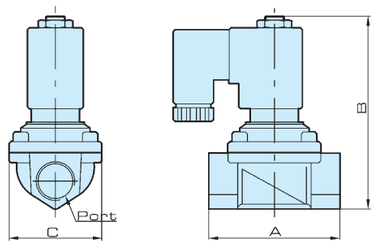

Dimension

Model	Bore	A	B	C
PU220-01	1/8	22	72	22
PU220-02	1/4	35	75.5	25.4
PU220-03	3/8	55	79.5	30
PU220-04	1/2	66.5	101	48
PU220-06	3/4	71	107	48
PU220-08	1	96	120	70

Valve
J4V100
J4V200
J4V300
J4V400
SV
5V100
5V200
5V300
5V400
Manifold
MCS
JVT307
JSY
5JV
JEL
MVSD
VF
BM
551
JEL10
3VJZF
Diaphragm
JELVD
JELMP
JELP/G
Coil
3V1
2P
2V
2W
2W(Big)
2L
VX
PU
PU225
2Q
JEL5404
JEL6213
BU
Pulse
JEL.JZF
4H
TSV
MPV
4HV
HV, K
4R
4F210
FV
MSV
JM
ASC, RE
QE, QEA
ST
HSV

PU Series
Solenoid Valve (For Steam)

JELPC — China Pneumatic

Valve
J4V100
J4V200
J4V300
J4V400
SV
5V100
5V200
5V300
5V400
Manifold
MCS
JVT307
JSY
5JV
JEL
MVSD
VF
BM
551
JEL10
3VJZF
Diaphragm
JELVD
JELMP
JELP/G
Coil
3V1
2P
2V
2W
2W(Big)
2L
VX
PU
PU225
2Q
JEL5404
JEL6213
BU
Pulse
JEL.JZF
4H
TSV
MPV
4HV
HV, K
4R
4F210
FV
MSV
JM
ASC, RE
QE, QEA
ST
HSV

PU225-04S

PU225-04S

Ordering Code

PU	-	225	-	03	-	S	-	AC220V
Specification		Operation		Port Size		Fix Form		Standard Voltage
PU: 2/2 way		225: Internal pilot		03: 3/8"		S: Steam		AC220V
				04: 1/2"				AC110V
				06: 3/4"				DC12V
				08: 1"				DC24V

Symbol

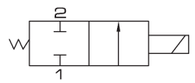

Specification

Model	PU225-03S	PU225-04S	PU225-06S	PU225-08S
Working Medium	Air, Water, Oil, Gas			
Operation	Internal Piloted			
Type	Normal Close			
Orifice	13mm	13mm	25mm	25mm
CV Value	4.50	4.50	12.00	12.00
Port Size	3/8"	1/2"	3/4"	1"
Operation Fluid Viscosity	50 CST			
Working-pressure	0.05～1.0 MPa			
Max. Test Pressure	1.5 MPa			
Ambient Temperature	-10～185 ℃			

Overall Dimension

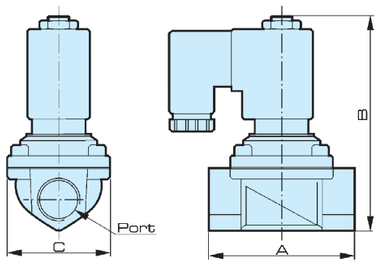

Dimension

Model	Bore	A	B	C
PU225-03S	3/8"	66.5	122.7	48.0
PU225-04S	1/2"	66.5	122.7	48.0
PU225-06S	3/4"	100.0	152.0	70.0
PU225-08S	1"	100.0	152.0	70.0

ISO9001:2008 CE

PU225 Series
Solenoid Valve

Valve
J4V100
J4V200
J4V300
J4V400
SV
5V100
5V200
5V300
5V400
Manifold
MCS
JVT307
JSY
5JV
JEL
MVSD
VF
BM
551
JEL10
3VJZF
Diaphragm
JELVD
JELMP
JELP/G
Coil
3V1
2P
2V
2W
2W(Big)
2L
VX
PU
PU225
2Q
JEL5404
JEL6213
BU
Pulse
JEL.JZF
4H
TSV
MPV
4HV
HV, K
4R
4F210
FV
MSV
JM
ASC, RE
QE, QEA
ST
HSV

PU225-04

PU225-06

PU225-08

SPU225-06

SPU225-20

Ordering Code

PU	-	225	-	03	-	A	-	AC220V	-	T
Specification		Operation		Port Size		Fix Form		Standard Voltage		Coil Form
PU：2/2 way		225: Internal piloted		03: 3/8"		A: Standard type		AC220V		Blank: Standard coil
SPU：2/2 way				04: 1/2"		F: Flange install		AC110V		T: Coil with time
Stainless steel				06: 3/4"				DC12V		
				08: 1"				DC24V		
				12: $1^1/4$"						
				14: $1^1/2$"						
				20: 2"						

Symbol

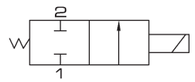

Specification

Model	PU225-03A / SPU225-03A	PU225-04A / SPU225-04A	PU225-06A / SPU225-06A	PU225-08A / SPU225-08A	PU225-12A / SPU225-12A	PU225-14A / SPU225-14A	PU225-20A
Working Medium	Air, Water, Oil						
Operation	Internal Piloted						
Type	Normal Close						
Orifice	13mm	13mm	25mm	25mm	38mm	38mm	50mm
CV Value	4.50	4.50	12.00	12.00	22.00	30.00	48
Port Size	3/8"	1/2"	3/4"	3/4"	$1^1/4$"	$1^1/2$"	2"
Medium of Body	Brass or Steel						
Operation Fluid Viscosity	Below 50 CST						
Working-pressure	0.05～1.0 MPa						
Max. Test Pressure	1.5 MPa						
Ambient Temperature	-10～80 ℃						

Overall Dimension

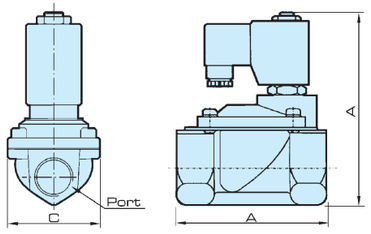

Dimension

Model	Bore	A	B	C
PU225-03A	3/8"	66.5	106.5	48.0
SPU225-03A				
PU225-04A	1/2"	66.5	106.5	48.0
SPU225-04A				
PU225-06A	3/4"	96.0	126.0	70.0
SPU225-06A				
PU225-08A	1"	96.0	126.0	70.0
SPU225-08A				

Model	Bore	A	B	C
PU225-12 A	$1^1/4$"	131.0	145.5	96.0
SPU225-12A				
PU225-14A	$1^1/2$"	131.0	145.5	96.0
SPU225-14A				
PU225-20A	2"	160.0	160.5	112

2Q Series
2/2 Way Valve

JELPC® | JELPC — China Pneumatic

2Q200-25

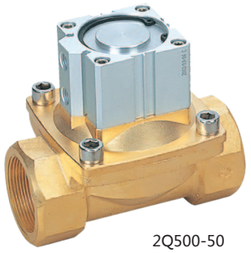
2Q500-50

Ordering Code

2Q	-	200	-	25
Specification		Orifice Size		Port Size
2Q: 2/2 Way Air Control		200: 22 mm		25: 1″
		350: 35 mm		40: 1 1/2″
		500: 50 mm		50: 2″

Symbol

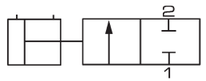

Specification

Model	2Q200-20	2Q200-25	2Q350-40	2Q500-50
Working Medium	Air, Water, Oil, Gas			
Operation	Direct			
Orifice	22mm	22mm	35mm	50mm
CV Value	12	12	24	48
Port Size	3/4″	1″	1 1/2″	2″
Operation Fluid Viscosity	Below 50 CST			
Applied pressure Range	0 ~ 0.7 MPa			
Max. Test Pressure	1.05 MPa			
Control pressure Range	0.3 ~ 0.6 MPa			
Ambient Temperature Range	-10 ~ 100 ℃			
Material of Body	Brass			
Material of Oil Seal	PTFE			
Control Port Size	2 - G1/8″	2 - G1/8″	2 - G1/4″	2 - G1/4″

Overall Dimension

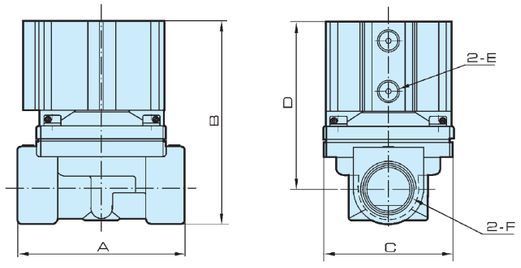

Dimension

Model	A	B	C	D	E	F
2Q200-20	99	116	57	95	1/8″	3/4″
2Q200-25	99	116	57	95	1/8″	1″
2Q350-40	123	146	95	116	1/4″	1 1/2″
2Q500-50	170	155	118	114	1/4″	2″

ISO9001:2008 CE

JEL5404 Series
High Pressure and Temperature Solenoid Valve

JEL5404-04

JEL5404-06

JEL5404-08

Ordering Code

JEL	-	5404	-	04	-	AC220V	-	D
JELPC		Model		Port Size		Standard Voltage		Wiring
				04: 1/2″		DC12V DC24V		Blank: Lead wire with steel covered coil
				06: 3/4″		AC24V 50/60Hz		D: DIN terminal
				08: 1″		AC110V 50/60Hz		
						AC220V 50/60Hz		
						AC380V 50/60Hz		

Symbol

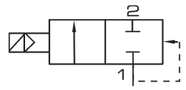

Specification

Model	JEL5404-04	JEL5404-06	JEL5404-08
Working Medium	Air, Water, Oil		
Operation	Internal Piloted		
Type	Normal Colse		
Orifice	12mm	20mm	25mm
KV Value	2.0	5.0	10.0
Port Size	1/2″	3/4″	1″
Applied pressure Range	Gas / Liquid: 0.1 ~ 5.0 MPa	Gas: 1 ~ 4.0 MPa Liquid: 0.1 ~ 2.5 MPa	Gas: 0.1 ~ 4.0MPa Liquid: 0.1 ~ 2.5MPa
Max. Test Pressure	7.5 MPa	6.0 MPa	
Ambient Temperature Range	-10~150 ℃		
Applied Voltage Range	± 10%		
Protection	IP 65		
Power Consumption	AC: 5.5VA DC: 9W		
Insulation	F Class		
Material of Body	Brass		
Material of Oil Seal	PTFE		

Overall Dimension

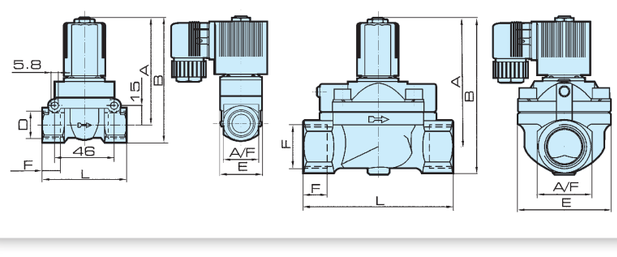

Dimension

Model	Orifice mm	Port Size	A	B	F	D	L	A/F
JEL5404-04	12.0	1/2″	83.0	95.5	14	32	65	27
JEL5404-06	20.0	3/4″	99.5	119	16	60	92	40
JEL5404-08	25.0	1″	99.5	119	16	60	92	40

Valve
J4V100
J4V200
J4V300
J4V400
SV
5V100
5V200
5V300
5V400
Manifold
MCS
JVT307
JSY
5JV
JEL
MVSD
VF
BM
551
JEL10
3VJZF
Diaphragm
JELVD
JELMP
JELP/G
Coil
3V1
2P
2V
2W
2W(Big)
2L
VX
PU
PU225
2Q
JEL5404
JEL6213
BU
Pulse
JEL.JZF
4H
TSV
MPV
4HV
HV, K
4R
4F210
FV
MSV
JM
ASC, RE
QE, QEA
ST
HSV

JEL6213 Series
Solenoid Valve

JELPC® | JELPC — China Pneumatic

Valve
J4V100
J4V200
J4V300
J4V400
SV
5V100
5V200
5V300
5V400
Manifold
MCS
JVT307
JSY
5JV
JEL
MVSD
VF
BM
551
JEL10
3VJZF
Diaphragm
JELVD
JELMP
JELP/G
Coil
3V1
2P
2V
2W
2W(Big)
2L
VX
PU
PU225
2Q
JEL5404
JEL6213
BU
Pulse
JEL.JZF
4H
TSV
MPV
4HV
HV, K
4R
4F210
FV
MSV
JM
ASC, RE
QE, QEA
ST
HSV

JEL6213-04

JEL6213-06

JEL6213-08

Ordering Code

JEL	-	6213	-	04	-	AC220V
JELPC		Model		Port Size		Standard Voltage

Port Size
02: 1/4"
03: 3/8"
04: 1/2"
06: 3/4"
08: 1"

Standard Voltage
DC12V DC24V
AC24V 50/60Hz
AC36V 50/60Hz
AC110V 50/60Hz
AC220V 50/60Hz

Symbol

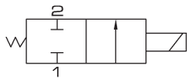

Specification

Model		JEL6213-02	JEL6213-03	JEL6213-04	JEL6213-04	JEL6213-06	JEL6213-06	JEL6213-08
Orifice		10mm			14mm		25mm	
Screw Port Size		G1/4"	G3/8"	G1/2"	G1/2"	G3/4"	G3/4"	G1"
Working Pressure		0.03 ~ 1.0MPa						
Ambient Temperature		-10 ~ +55℃						
Medium Environment		-10 ~ +90℃						
KV Valve		2		3.6	8.3	8.3	11	11
Power Consume	AC (VA)	14						
	DC (W)	8						
Switching Frequency		≥1 Sec			≥0.5 Sec			

Overall Dimension

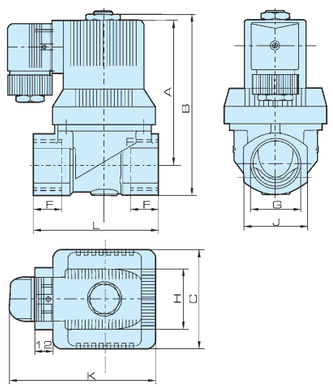

Dimension

Model	G	C	F	L	J	A	B	H	K
JEL6213-02	PT1/4"	38	14	50	26	71	85	35	71
JEL6213-03	PT3/8"	38	14	50	26	71	85	35	71
JEL6213-04	PT1/2"	38	14	50	26	71	85	35	71
JEL6213-04	PT1/2"	45	16	58	31	82	96	35	80
JEL6213-06	PT3/4"	45	16	58	31	82	96	35	80
JEL6213-06	PT3/4"	65	18	82	41	96	117	35	90
JEL6213-08	PT1"	65	18	82	41	96	117	35	90

ISO9001:2008 CE

BU Series
2/2 Way Solenoid Valve

Ordering Code

BU	-	08	-	A
Model		Port Size		A: Inner Diameter of Coil is Ø13.3mm , Code of Coil is SB520
		08: G1/4"		Blank: Inner diameter of wiring is Ø14.3mm , Code of Coil is KT09

Symbol

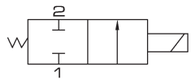

Specification

Model	BU-08, BU-08A
Position Number	2/2 Way
Orifice Size	Ø 2.8 mm
Operation	Direct
Filter Precision	Air, Water, Oil
Working Pressure	0 ~ 1.0 MPa
Working Temperature	-10 ~150 ℃
Voltage Range	± 10%
Protection Class	IP 65
Power Consumption	AC : 13 VA, DC : 9 W
Insulation	F Class

Overall Dimension

BU-08

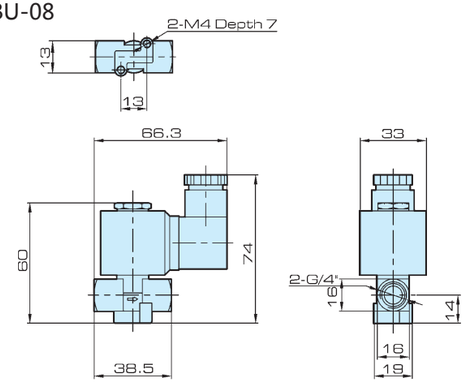

BU-08A

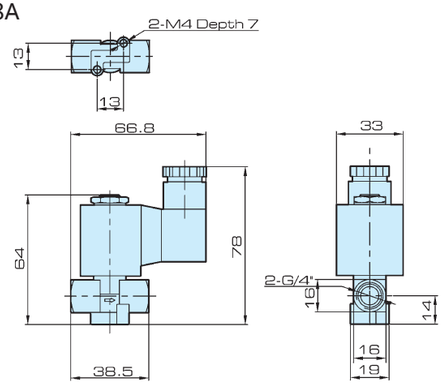

Valve
J4V100
J4V200
J4V300
J4V400
SV
5V100
5V200
5V300
5V400
Manifold
MCS
JVT307
JSY
5JV
JEL
MVSD
VF
BM
551
JEL10
3VJZF
Diaphragm
JELVD
JELMP
JELP/G
Coil
3V1
2P
2V
2W
2W(Big)
2L
VX
PU
PU225
2Q
JEL5404
JEL6213
BU
Pulse
JEL.JZF
4H
TSV
MPV
4HV
HV, K
4R
4F210
FV
MSV
JM
ASC, RE
QE, QEA
ST
HSV

Valve
J4V100
J4V200
J4V300
J4V400
SV
5V100
5V200
5V300
5V400
Manifold
MCS
JVT307
JSY
5JV
JEL
MVSD
VF
BM
551
JEL10
3VJZF
Diaphragm
JELVD
JELMP
JELP/G
Coil
3V1
2P
2V
2W
2W(Big)
2L
VX
PU
PU225
2Q
JEL5404
JEL6213
BU
Pulse
JEL,JZF
4H
TSV
MPV
4HV
HV, K
4R
4F210
FV
MSV
JM
ASC, RE
QE, QEA
ST
HSV

Feature

1. Brought in advanced design and improved
2. Applied for dust clear of compressed air switch in dust cleaning system.
3. Key components materials are imported.
4. Air control type, solenoid type and anti explosion solenoid type are available.
5. Pipe type connecting ensures firmly and reliable installation.

Ordering Code

JEL	-	Z	-	20	-	P
JELPC		Z: Vertical type Slenoid Pulse Valve		Bore		Connection Form

Bore	
Ø 20	Ø 50
Ø 25	Ø 62
Ø 35	Ø 76
Ø 40	Ø 100

Connection Form	
Blank :	Normal screw
A	Tubing+threaded
P	Screw
S	Double diaphragm
J	Threaded (economical type)
DD	Pipe connecting type

Specification

Model	Working-pressure	Ambient Temperature	Humidity	Applied Medium	Voltage	Diaphram life	Orifice	Thread
JEL-Z-20A	0.3~0.8MPa	-10~55℃	< 85%	Pure Air	AC110V AC220V DC24V	Above 1 Million Times	Ø20	G3/4"
JEL-Z-20P							Ø20	G3/4"
JEL-Z-20							Ø20	G3/4"
JEL-Z-25							Ø25	G1"
JEL-Z-25P							Ø25	G1"
JEL-Z-35P							Ø35	G1 1/2"
JEL-Z-40S							Ø40	G1 1/2"
JEL-Z-50S							Ø50	G2"
JEL-Z-62S							Ø62	G1 1/2"
JEL-Z-76S							Ø76	G3"
JEL-Z-100S							Ø100	Ø100

Overall Dimension

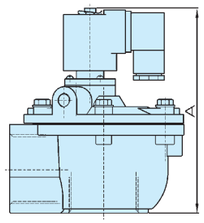

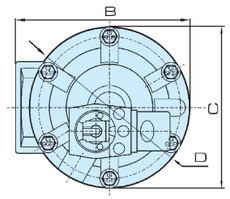

Model	JEL-Z -20A	JEL-Z -20P	JEL-Z -20	JEL-Z -25	JEL-Z -25P	JEL-Z -35P
A	173	124	110	110	124	142
B	145	105	90.5	90.5	105	121
C	-	82.5	75	75	82.5	-
D	Ø90	-	-	-	-	Ø112

Model	JEL-Z -40S	JEL-Z -50S	JEL-Z -62S	JEL-Z -76S	JEL-Z -100S
A	166	202	222	245	356.5
B	132	210	210	230.5	286.5
C	-	-	-	-	-
D	Ø137	Ø185	Ø185	Ø200	Ø221

Ordering Code

JEL	-	JZF	-	15	-	D	-	1	-	NC
JELPC		Specification		Orifice		Material of Body		Mountings		Normal Close

Specification	Orifice	Material of Body	Mountings	Normal Close
JZF: Angle Valve	15, 20, 25, 32, 40, 50	D: Bronze	F: Flange	NC: Normal Close
		Blank: S. Steel	1: Single Acting	NO: Normal Open
			2: Double Acting	

Symbol

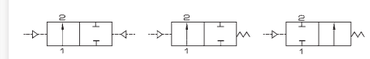

Double function type | Normal close type | Normal open type

Specification

Orifice size (mm)	Port Thread	Kv (m^3/h)	Max. Working Pressure (MPa)	Required Min. Control Pressure (MPa)	PA	Medium Tanperature	Direction
15	G1/2"	4.2	0~1.6	0.39	50	-10~+180℃	Direction A or B
20	G3/4"	8	0~1.1	0.39	50		
25	G1"	19	0~1.1	0.42	63		
32	G1 1/4"	27.5	0~1.5	0.5	63		
40	G1 1/2"	42	0~1.25	0.44	63		
50	G2"	55	0~1.0	0.4	80		
65	G2 1/2"	65	0~1.0	0.4	100		

Fix and Maintain

1. Clean the pipes carefully from any residue, dribble or welding residue, to avoid any damage to the seal.
2. To be installed as required, preferably with actuator in upright position.
3. Connect the pipes according to the reference points (flow direction) found on the valve body. Only disassemble actuator if required by customer.
4. Before taking the valve apart, depressurize the medium supply and piloted air supply from piping system.

Valve
J4V100
J4V200
J4V300
J4V400
SV
5V100
5V200
5V300
5V400
Manifold
MCS
JVT307
JSY
5JV
JEL
MVSD
VF
BM
551
JEL10
3VJZF
Diaphragm
JELVD
JELMP
JELP/G
Coil
3V1
2P
2V
2W
2W(Big)
2L
VX
PU
PU225
2Q
JEL5404
JEL6213
BU
Pulse
JEL, JZF
4H
TSV
MPV
4HV
HV, K
4R
4F210
FV
MSV
JM
ASC, RE
QE, QEA
ST
HSV

Valve
J4V100
J4V200
J4V300
J4V400
SV
5V100
5V200
5V300
5V400
Manifold
MCS
JVT307
JSY
5JV
JEL
MVSD
VF
BM
551
JEL10
3VJZF
Diaphragm
JELVD
JELMP
JELP/G
Coil
3V1
2P
2V
2W
2W(Big)
2L
VX
PU
PU225
2Q
JEL5404
JEL6213
BU
Pulse
JEL, JZF
4H
TSV
MPV
4HV
HV, K
4R
4F210
FV
MSV
JM
ASC, RE
QE, QEA
ST
HSV

Internal Structure

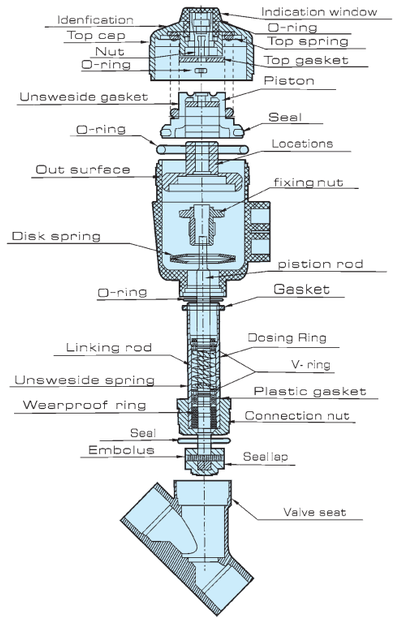

Overall Dimension

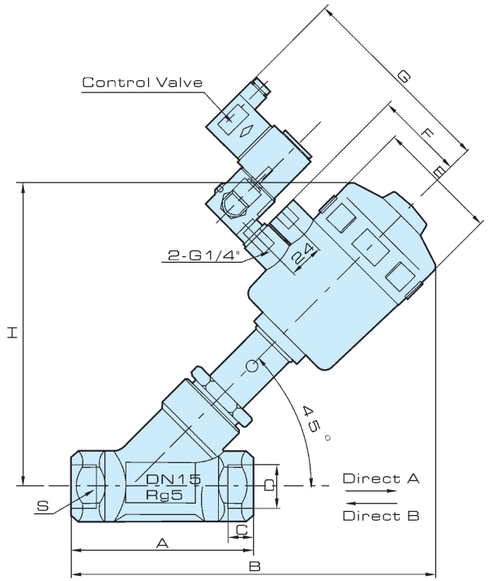

Dimension

Orifice (mm)	Port Thread D	Execution Device Dimension (Φ mm)		A	B		C	ØE		F		G		H		L	S
		PA	aluminium		PA	aluminium		PA	aluminium	PA	aluminium	PA	aluminium	PA	aluminium		
15	G1/2"	50	-	85	173	-	12	64	-	44	-	112	-	137	-	33	27
20	G3/4"	50	-	95	178	-	12	64	-	44	-	112	-	145	-	35	32
25	G1"	63	-	105	212	-	14	80	-	52	-	120	-	173	-	40	41
32	G1 1/4"	63	100	118	236	276	16	80	140	52	70	120	138	189	250	35	55
40	G1 1/2"	63	100	130	230	270	18	80	140	52	70	120	138	189	250	35	55
50	G2"	80	125	150	238	300	20	100	170	52	83	120	151	250	260	38	70
65	G2 1/2"	100	-	155	300	-	25	125	-	62	-	130	-	265	-	48	80

Note

* Features while select A type flow direction

Increase service life.
Prevent water impact when working medium is liquid.
Product with orifice size at Ø15, Ø20 or Ø25, it is necessary to keep working pressure under 0.3 MPa, otherwise double-acting actuators should be adopted.
Product with orifice size at Ø32 or Ø40, double-acting actuators should be Ø100.
Product with orifice size at Ø50, double-acting actuators should be Ø125.

* Features while select B type flow direction

Sealing property can be improved under B type flow direction while medium is steam or liquid. If the V shape sealing contact with working medium is too long, and it will influence on service life. Apart from that, the anti-water impact does not exit when working medium is liquid.

Ordering Code

JEL	-	7	-	2	-	3	-	0	-	10
JELPC		Function		Steal Material		Acting Device Material		Key sealing		Specification
		7: Normal close		2: 316 Stainless steel		3: Engineering material		0: Viton		10: 3/8"
		8: Normal open		3: 304 Stainless steel		4: Aluminium		9: PTFE		15: 1/2"
		9: Double direction				5: 304 Stainless steel				20: 3/4"
										25: 1"
										32: 1 1/4"
										40: 1 1/2"
										50: 2"
										65: 2 1/2"
										80: 3"

Symbol

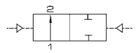
Double function type

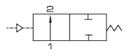
Normal close type

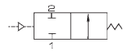
Normal open type

Specification

Connection Size	DN10 - DN80
Screw	3/8" ~ 3"
Material of Body	Stainless Steel 316/304
Acting Device Material	Stainless Steel 304
Valve Core Seal	PTFE / FPM
Valve Rod Seal	PTFE / FPM
Piston Seal	FPM / NBR
Suitable Medium	Water, Neutral Air (or liquid), Alchohol, Oil, Organic liquid, Steam, Weak Acid or alkalescence
Medium Temperature	PTFE：-10 ℃~+200 ℃ FPM：-10 ℃~+100 ℃
Stickiness	Max. 600 mm^2/ sec.
Installation	Follow flow installation
Control Medium	Air / Neutral Air
Controled Pressure Range	0.3~0.8 MPa
Working-pressure	0~1.6 MPa

Valve
J4V100
J4V200
J4V300
J4V400
SV
5V100
5V200
5V300
5V400
Manifold
MCS
JVT307
JSY
5JV
JEL
MVSD
VF
BM
551
JEL10
3VJZF
Diaphragm
JELVD
JELMP
JELP/G
Coil
3V1
2P
2V
2W
2W(Big)
2L
VX
PU
PU225
2Q
JEL5404
JEL6213
BU
Pulse
JEL, JZF
4H
TSV
MPV
4HV
HV, K
4R
4F210
FV
MSV
JM
ASC, RE
QE, QEA
ST
HSV

Valve
J4V100
J4V200
J4V300
J4V400
SV
5V100
5V200
5V300
5V400
Manifold
MCS
JVT307
JSY
5JV
JEL
MVSD
VF
BM
551
JEL10
3VJZF
Diaphragm
JELVD
JELMP
JELP/G
Coil
3V1
2P
2V
2W
2W(Big)
2L
VX
PU
PU225
2Q
JEL5404
JEL6213
BU
Pulse
JEL, JZF
4H
TSV
MPV
4HV
HV, K
4R
4F210
FV
MSV
JM
ASC, RE
QE, QEA
ST
HSV

Overall Dimension

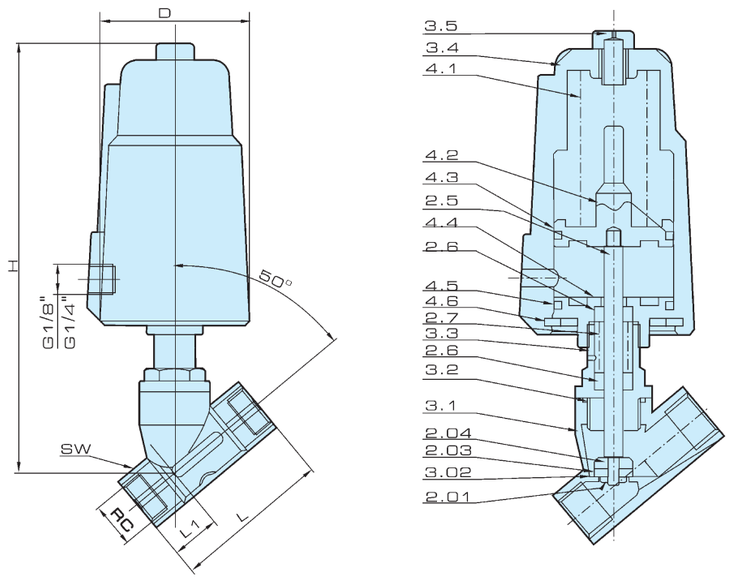

Specification

Overall Dimension							
DN	RC	L	L1	SW	H	D	Acting Device
10	3/8"	55	17	21	120	51	40
15	1/2"	70	21	26.5	138	51	40
20	3/4"	76	23	32	154	62	50
25	1"	90	25	40	168	62	50
32	$1^1/4$"	116	32	50	200	76	63
40	$1^1/2$"	116	32	55.5	215	92	80
50	2"	138	40	68.5	230	92	80
65	$2^1/2$"	168	51	85	268	117	100
80	3"	192	54	100	325	140	125

Parts		
2.01 Bolt	3.1 Valve body	4.1 Spring
2.02 Hole plate sealing	3.2 O-ring seal	4.2 Piston
2.03 Sealing disk	3.3 Threed connecting accessory	4.3 O-ring
2.04 Valve disk	3.4 Cylinder	4.4 Valve Cover
2.5 Valve spool	3.5 Decorating Cover	4.5 O-ring
2.6 V Shape material		4.6 Pressure receipt ring
2.7 Spring		

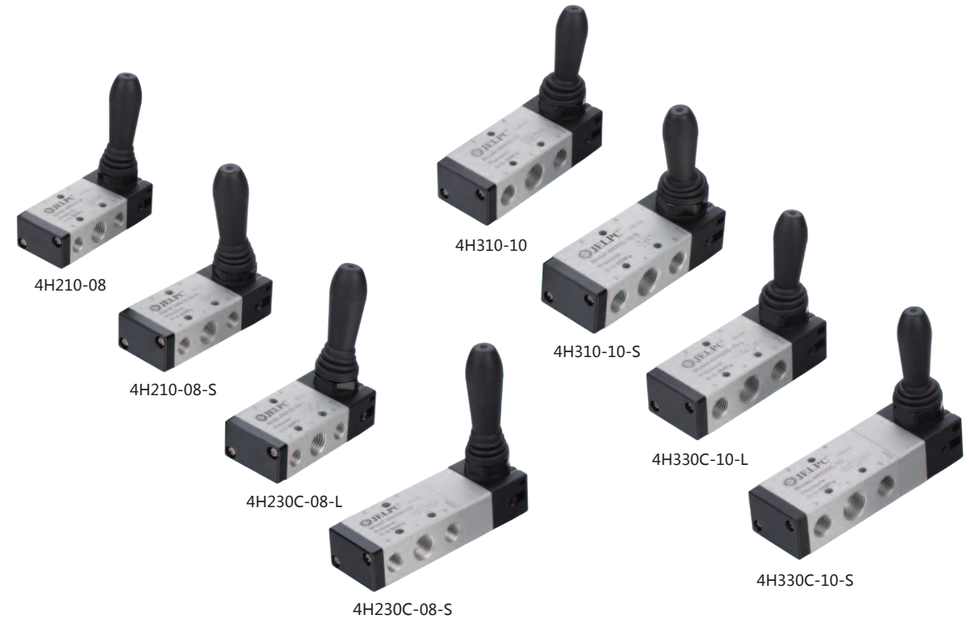

Features

1. We guarantee inner hole roughness within our new processing.
2. Handle base use high strength plastic to beastifl the apperance.
3. To import German high standard special grease which provides film in order to reduce friction.
4. Valve spool use seals which import from Japan to increase the life time.

Ordering Code

4H	-	2	-	10	-	C	-	06	-	L
Specification		Series Code		Position Number		Middle Position		Port Size		Type
4H: 5/2(3) Way		2: 200 Series		10: Single head two position		C: Mid-position closed		06: G1/8"		Blank: 5/2 way lock type
3H: 3/2 Way		3: 300 Series		30: Single head three position		E: Mid-position exhausted		08: G1/4"		L: 5/3 way lock type
		4: 400 Series (without 3H)				P: Mid-position pressured		10: G3/8"		S: 5/2 (3) way spring return type
								15: G1/2"		

Specification

Model	4H210-06	4H210-08	4H230-08	4H310-08	4H310-10	4H330-10	4H410-15	4H430-15
Working Medium	40 Micron Filtered Air							
Operation	Direct							
Effective Cross Section Area	14mm²(CV=0.78)	16mm²(CV=0.89)	12mm²(CV=0.67)	25mm²(CV=1.4)	30mm²(CV=1.68)	18mm²(CV=1.00)	50mm²(CV=2.79)	30mm²(CV=1.68)
Port Size	Inlet, Outlet, Exhaust Port = G1/8"	Inlet, Outlet = G1/4" Exhaust Port=G1/8"	Inlet, Outlet, Exhaust Port = G1/4"	Inlet, Outlet, Exhaust Port = G1/4"	Inlet, Outlet = G3/8" Exhaust Port = G1/4"		Inlet, Outlet, Exhaust Port = G1/2"	
Working Pressure	0 ~ 0.8MPa							
Working Temperature	-20 ~ 70℃							

Valve
J4V100
J4V200
J4V300
J4V400
SV
5V100
5V200
5V300
5V400
Manifold
MCS
JVT307
JSY
5JV
JEL
MVSD
VF
BM
551
JEL10
3VJZF
Diaphragm
JELVD
JELMP
JELP/G
Coil
3V1
2P
2V
2W
2W(Big)
2L
VX
PU
PU225
2Q
JEL5404
JEL6213
BU
Pulse
JEL.JZF
4H
TSV
MPV
4HV
HV, K
4R
4F210
FV
MSV
JM
ASC, RE
QE, QEA
ST
HSV

JELPC® | JELPC — China Pneumatic

Internal Structure

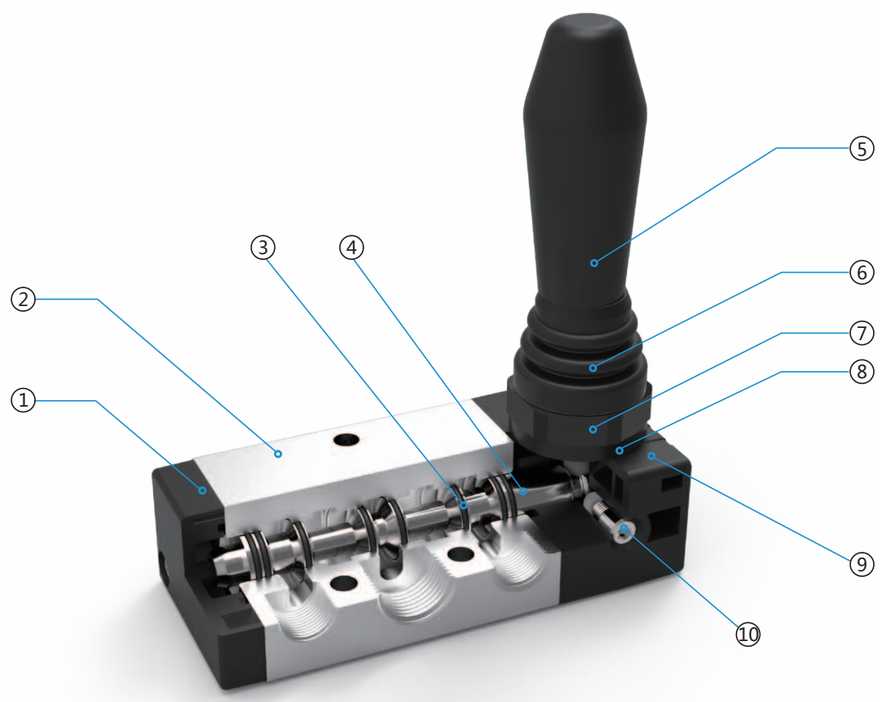

Parts

Number	Name	Number	Name
1	Back cover	6	Dirt-proof boot
2	Valve body	7	Lock nut
3	Flat ring	8	Gasket
4	Valve spool	9	Top cover
5	Handle	10	Set screw

ISO9001:2008 CE

Overall Dimension

4H210-06

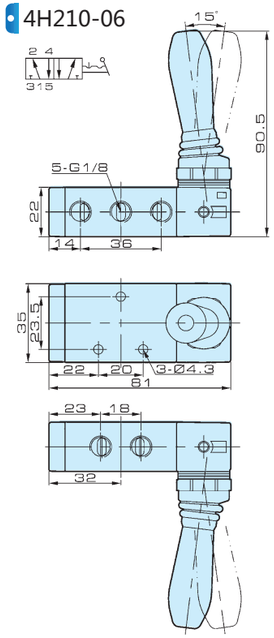

4H230C-06-L

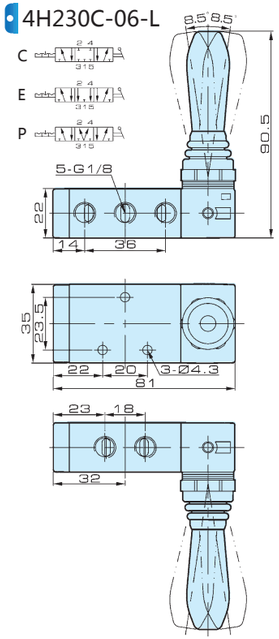

4H310-08

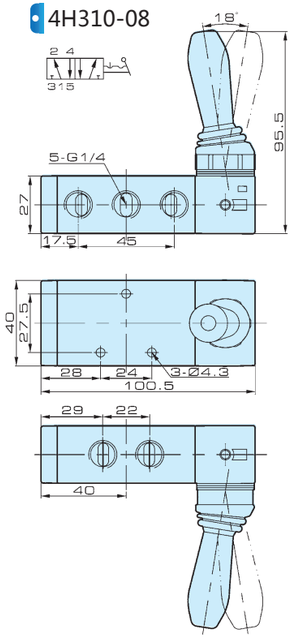

4H210-08

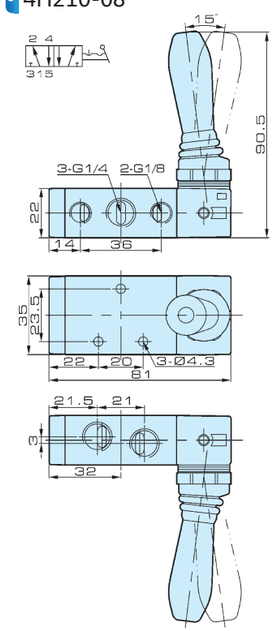

4H230C-08-L

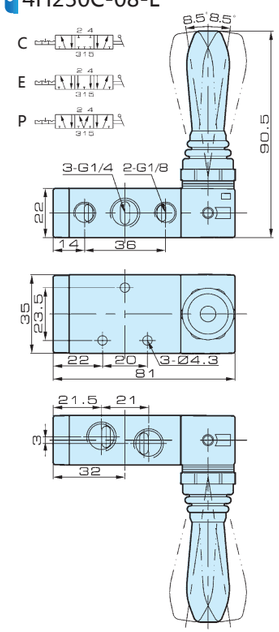

4H310-10

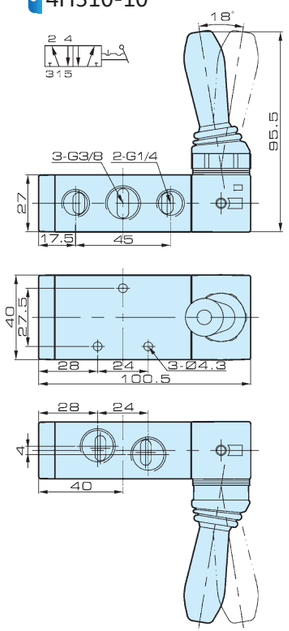

Valve
J4V100
J4V200
J4V300
J4V400
SV
5V100
5V200
5V300
5V400
Manifold
MCS
JVT307
JSY
5JV
JEL
MVSD
VF
BM
551
JEL10
3VJZF
Diaphragm
JELVD
JELMP
JELP/G
Coil
3V1
2P
2V
2W
2W(Big)
2L
VX
PU
PU225
2Q
JEL5404
JEL6213
BU
Pulse
JEL.JZF
4H
TSV
MPV
4HV
HV, K
4R
4F210
FV
MSV
JM
ASC, RE
QE, QEA
ST
HSV

JELPC® | JELPC — China Pneumatic

ISO9001:2008 CE

4H Series
Hand Pull Valve

Valve
J4V100
J4V200
J4V300
J4V400
SV
5V100
5V200
5V300
5V400
Manifold
MCS
JVT307
JSY
5JV
JEL
MVSD
VF
BM
551
JEL10
3VJZF
Diaphragm
JELVD
JELMP
JELP/G
Coil
3V1
2P
2V
2W
2W(Big)
2L
VX
PU
PU225
2Q
JEL5404
JEL6213
BU
Pulse
JEL.JZF
4H
TSV
MPV
4HV
HV, K
4R
4F210
FV
MSV
JM
ASC, RE
QE, QEA
ST
HSV

Overall Dimension

4H330C-08-L

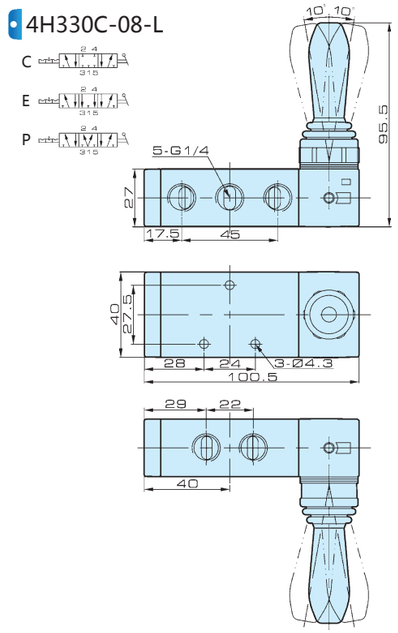

4H410-15

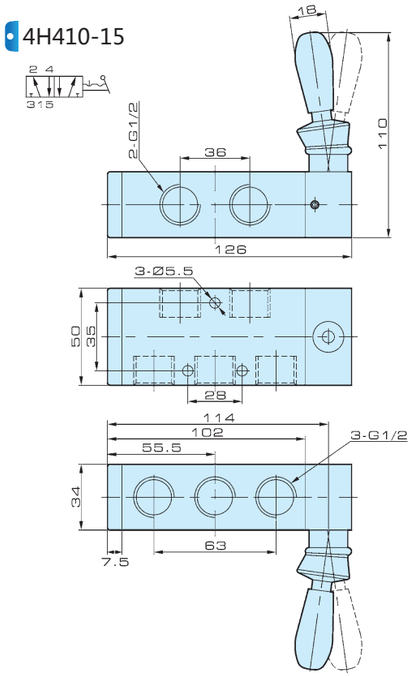

4H330C-10-L

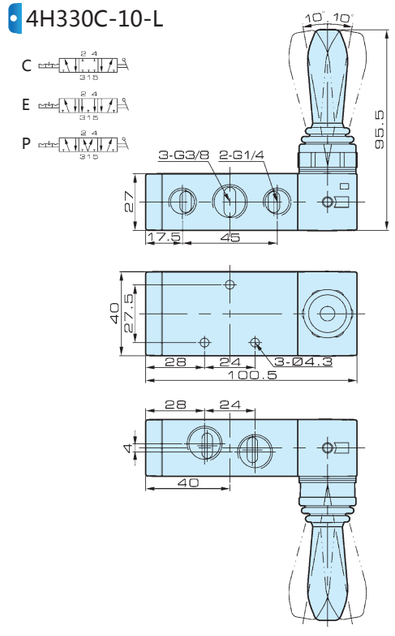

4H430-15

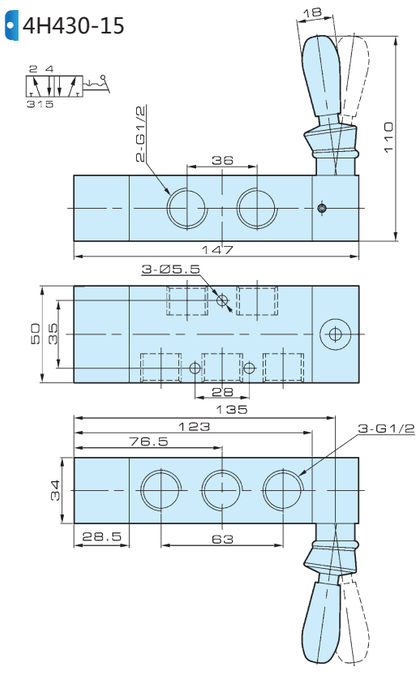

Overall Dimension

4H210-06-S

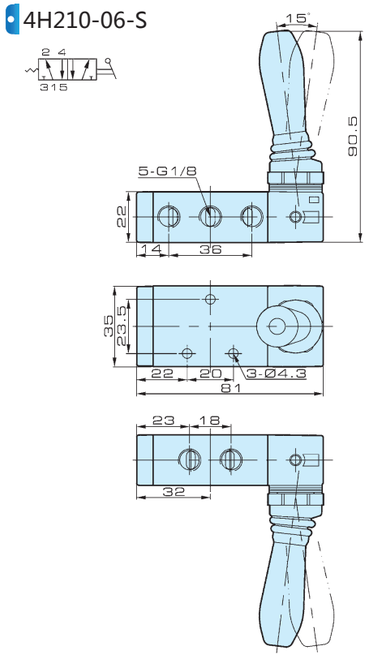

4H230C-06-S

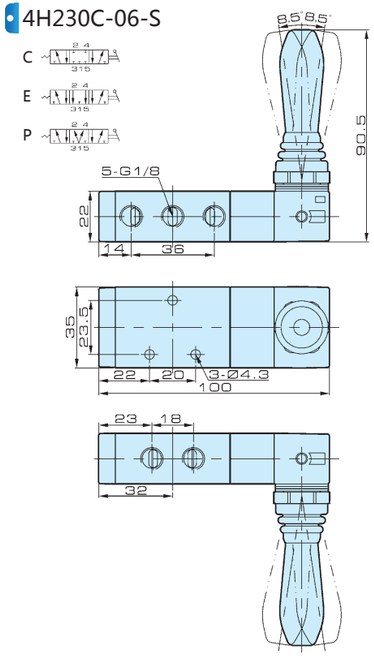

4H210-08-S

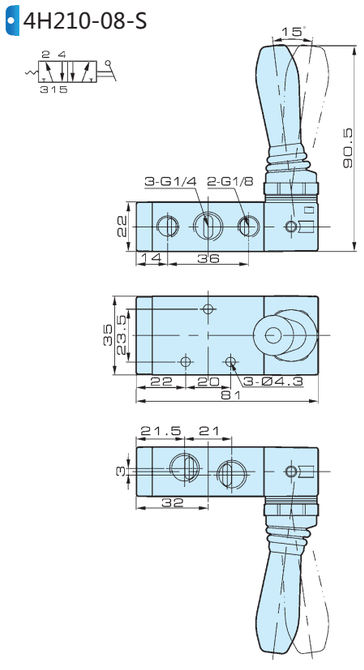

4H230C-08-S

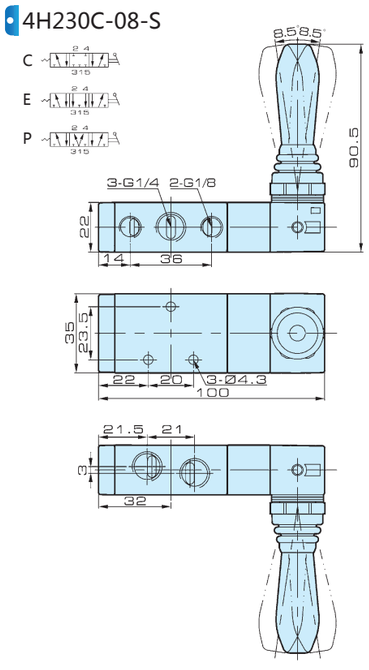

Valve
J4V100
J4V200
J4V300
J4V400
SV
5V100
5V200
5V300
5V400
Manifold
MCS
JVT307
JSY
5JV
JEL
MVSD
VF
BM
551
JEL10
3VJZF
Diaphragm
JELVD
JELMP
JELP/G
Coil
3V1
2P
2V
2W
2W(Big)
2L
VX
PU
PU225
2Q
JEL5404
JEL6213
BU
Pulse
JEL.JZF
4H
TSV
MPV
4HV
HV, K
4R
4F210
FV
MSV
JM
ASC, RE
QE, QEA
ST
HSV

JELPC® | JELPC — China Pneumatic

ISO9001:2008 CE

4H Series
Hand Pull Valve

Overall Dimension

4H310-08-S

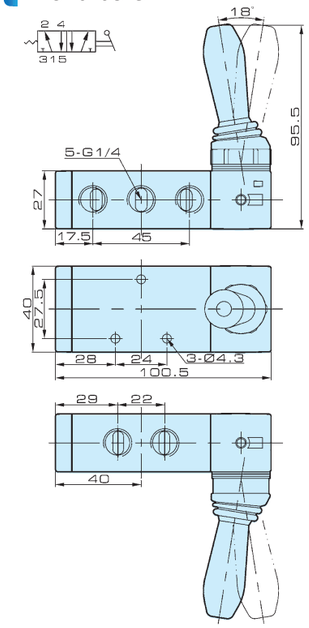

4H330C-08-S

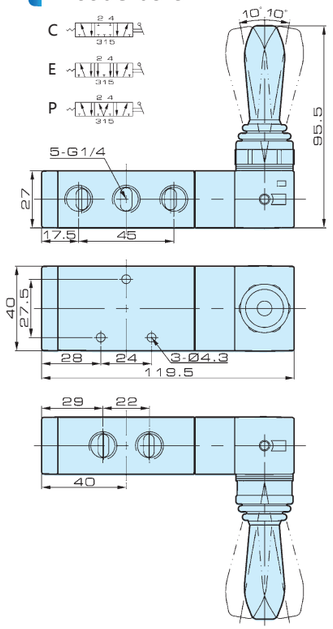

3H210-06

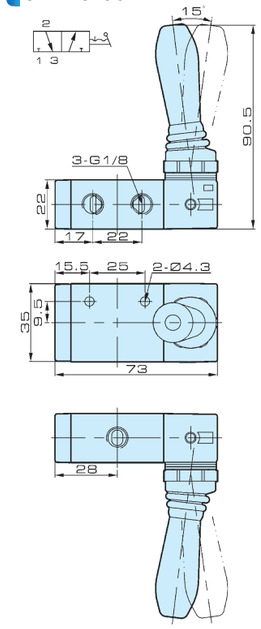

4H310-10-S

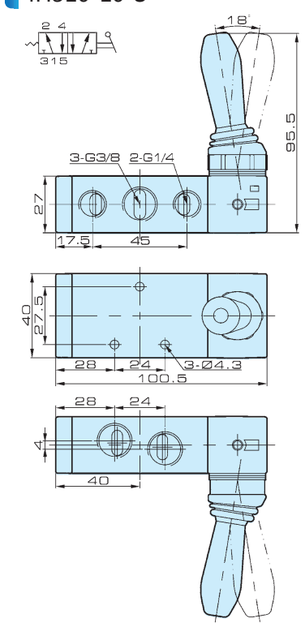

4H330C-10-S

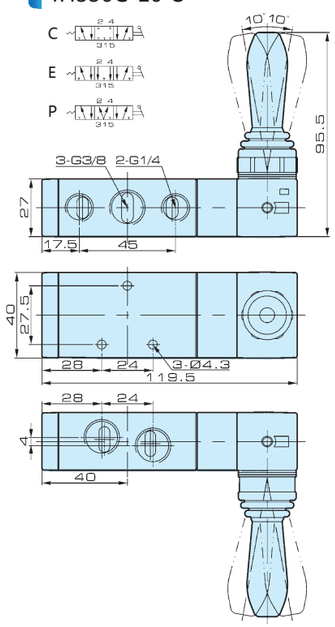

3H210-08

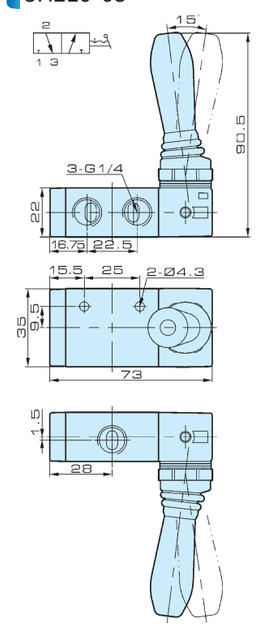

Overall Dimension

3H310-08

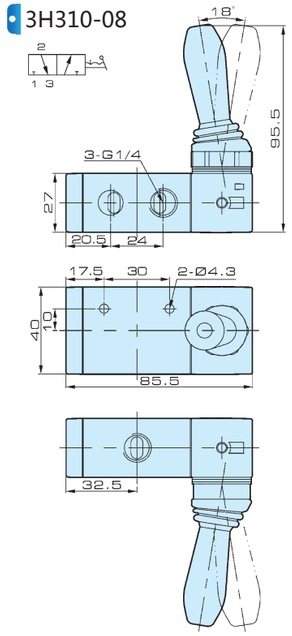

3H210-06-S

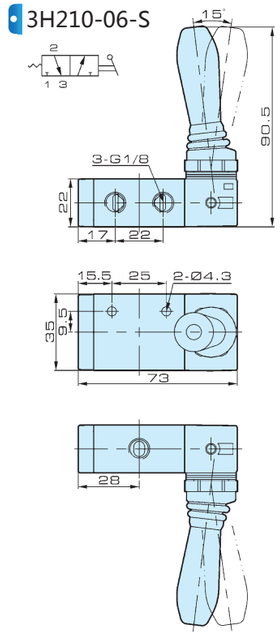

3H310-08-S

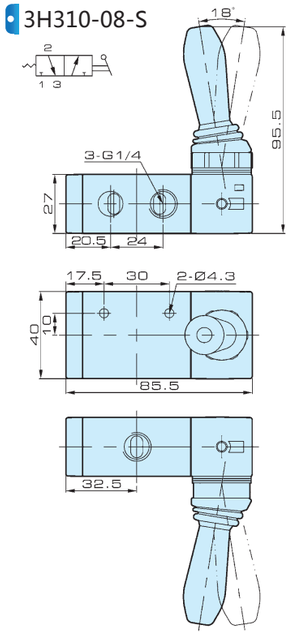

3H310-10

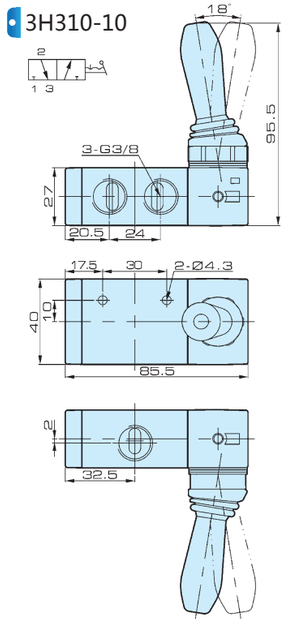

3H210-08-S

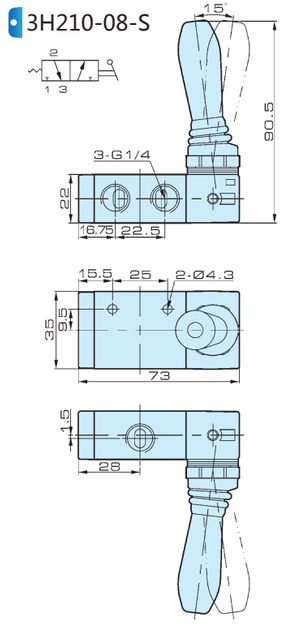

3H310-10-S

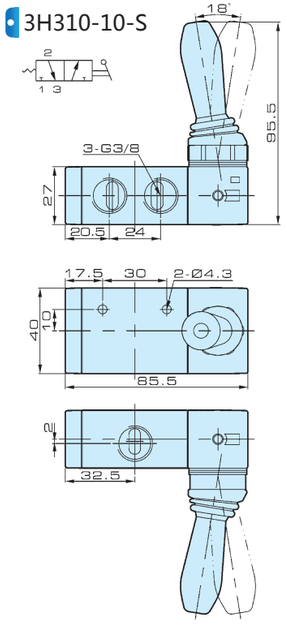

Valve
J4V100
J4V200
J4V300
J4V400
SV
5V100
5V200
5V300
5V400
Manifold
MCS
JVT307
JSY
5JV
JEL
MVSD
VF
BM
551
JEL10
3VJZF
Diaphragm
JELVD
JELMP
JELP/G
Coil
3V1
2P
2V
2W
2W(Big)
2L
VX
PU
PU225
2Q
JEL5404
JEL6213
BU
Pulse
JEL.JZF
4H
TSV
MPV
4HV
HV, K
4R
4F210
FV
MSV
JM
ASC, RE
QE, QEA
ST
HSV

Valve
J4V100
J4V200
J4V300
J4V400
SV
5V100
5V200
5V300
5V400
Manifold
MCS
JVT307
JSY
5JV
JEL
MVSD
VF
BM
551
JEL10
3VJZF
Diaphragm
JELVD
JELMP
JELP/G
Coil
3V1
2P
2V
2W
2W(Big)
2L
VX
PU
PU225
2Q
JEL5404
JEL6213
BU
Pulse
JEL.JZF
4H
TSV
MPV
4HV
HV, K
4R
4F210
FV
MSV
JM
ASC, RE
QE, QEA
ST
HSV

TSV Series
Hand Pull Valve

JELPC® | JELPC — China Pneumatic

TSV98322-M

TSV86522-M

Ordering Code

TSV86	-	52	-	2	-	M
Specification		Position Number		Port Size		Code
TSV86		52: 5/2 way		1: G1/8"		M: Mechanical Lock
TSV98		32: 3/2 way		2: G1/4"		S: Spring Rebound

Specification

Model	TSV86522 M/S	TSV98322 M/S
Working Medium	40 Micron Filtered Air	
Operation	Direct	
Effective Cross Section Area	18mm²	
Port Size	G1/4"	
Working Pressure	0～0.8MPa	
Working Temperature	-20～70℃	

Overall Dimension

TSV86522

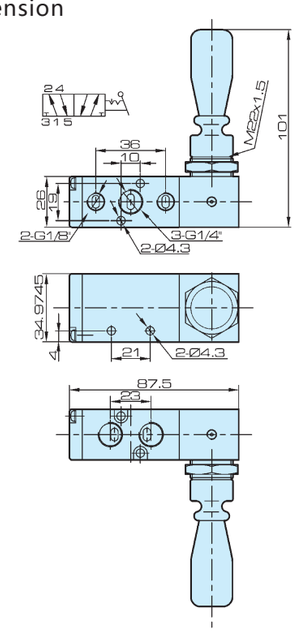

TSV98322

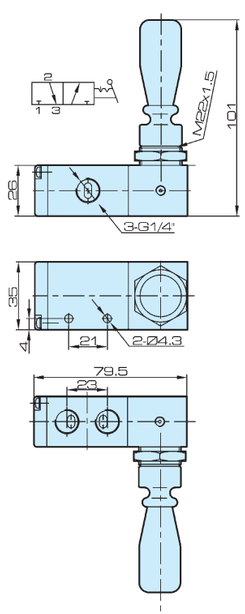

ISO9001:2008 CE

MPV Series
Hand Push Valve

MPV522

Ordering Code

MPV	-	52	-	2
Specification		Position Number		Code
Hand Push Valve		5/2 way		1: G1/8"
				2: G1/4"

Specification

Model	MPV522
Working Medium	40 Micron Filtered Air
Port Size	G1/4"
Effective Cross Section Area	18 mm² (CV=1.00)
Working Pressure	0～0.8 MPa
Working Temperature	-20～70℃

Overall Dimension

MPV522

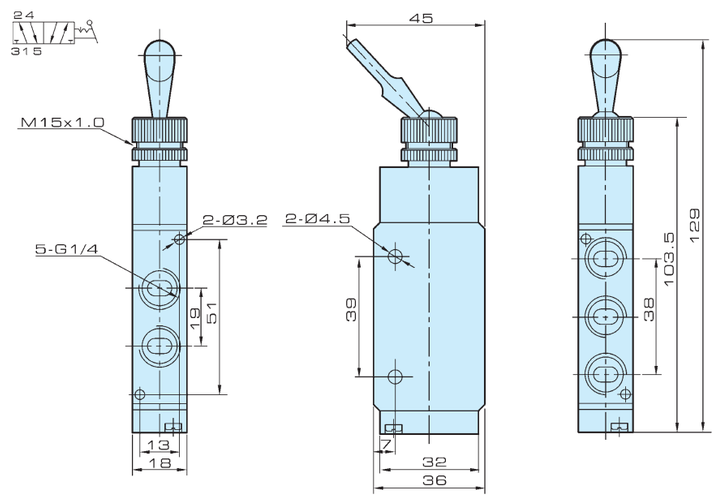

JELPC® | JELPC — China Pneumatic

Ceramic Seal

4HV230C-08

4HV330C-10

Ordering Code

4HV	-	2	-	30	-	C	-	06	-	TC	-	S
Specification		Series		Position Number		Middle Position		Port Size		Seal Form		Nut
4HV: Hand Switching Valve		2: 2 Series		10: 4/2 way		C: Mid-position Closed		06: G1/8		Blank: NBR		Blank: Without nut
		3: 3 Series		30: 4/3 way		E: Mid-position Exhausted		08: G1/4		Ceramic: TC		S: With nut
						P: Mid-position Pressed		10: G3/8				
								15: G1/2				

Specification

Model	4HV2□□□-06	4HV2□□□-08	4HV3□□□-08	4HV3□□□-10	4HV4□□□-15	4HV4□□□-20
Working Medium	40 Micron Filtered Air					
Port Size	G1/8"	G1/4"	G1/4"	G3/8"	G1/2"	G3/4"
Working Pressure	1.0 MPa					
Max. Test Pressure	1.2 MPa					
Max. Ambient Temperature	-20～70℃					
Working Angle	90					

ISO9001:2008 CE

4HV Series
Hand Switching Valve

Overall Dimension

4HV230C-08

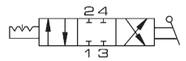

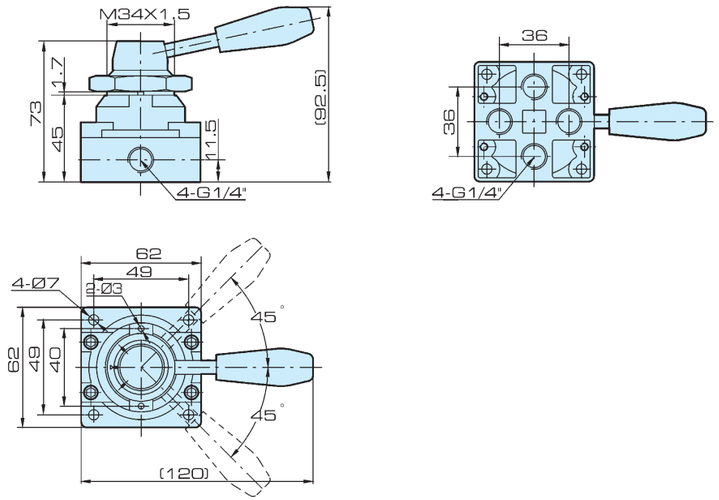

4HV330C-10

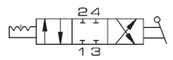

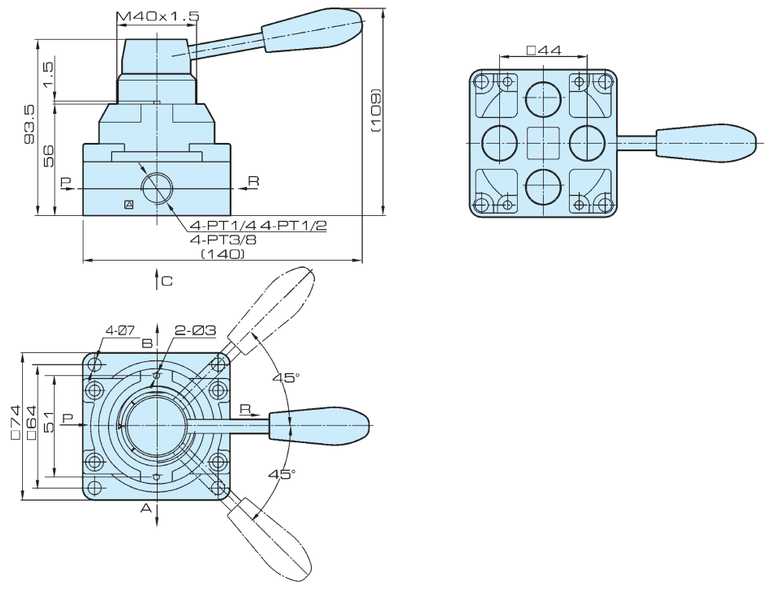

Valve
J4V100
J4V200
J4V300
J4V400
SV
5V100
5V200
5V300
5V400
Manifold
MCS
JVT307
JSY
5JV
JEL
MVSD
VF
BM
551
JEL10
3VJZF
Diaphragm
JELVD
JELMP
JELP/G
Coil
3V1
2P
2V
2W
2W(Big)
2L
VX
PU
PU225
2Q
JEL5404
JEL6213
BU
Pulse
JEL.JZF
4H
TSV
MPV
4HV
HV, K
4R
4F210
FV
MSV
JM
ASC, RE
QE, QEA
ST
HSV

Valve
J4V100
J4V200
J4V300
J4V400
SV
5V100
5V200
5V300
5V400
Manifold
MCS
JVT307
JSY
5JV
JEL
MVSD
VF
BM
551
JEL10
3VJZF
Diaphragm
JELVD
JELMP
JELP/G
Coil
3V1
2P
2V
2W
2W(Big)
2L
VX
PU
PU225
2Q
JEL5404
JEL6213
BU
Pulse
JEL.JZF
4H
TSV
MPV
4HV
HV, K
4R
4F210
FV
MSV
JM
ASC, RE
QE, QEA
ST
HSV

K34R$_8$-L8

HV400

HV400

Ordering Code

HV	-	400	-	02	-	B
Specification		Series		Port Size		Connection type
Hand Switching Valve				02: G1/4"		Blank: Threaded
				03: G3/8"		B: Sub-plated
				04: G1/2"		

K	-	34	-	R$_8$	-	L8
Specification		Series		Port Size		Connection Type
Hand Switching Valve		24: 4/2 Way		R$_8$: Hand Switching Valve		L6: G1/8"
		34: 4/3 Way				L8: G1/4"

Specification

Model	HV400-02	HV400-03	HV400-04	K34R$_8$-L6	K34R$_8$-L8
Working Medium	40 Micron Filtered Air				
Port Size	G1/4"	G3/8"	G1/2"	G1/8"	G1/4"
Effective Cross Section Area	30 mm^2 (CV=1.68)			18 mm^2 (CV=1.00)	
Working Pressure	0 ~ 0.8 MPa				
Max. Ambient Temperature	-20 ~ 70℃				

Overall Dimension

HV400

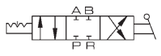

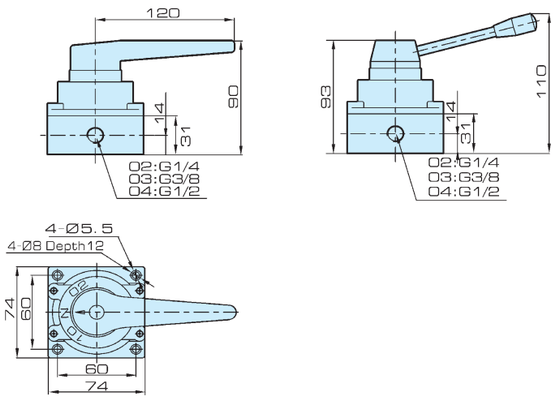

K34R$_8$-L8

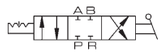

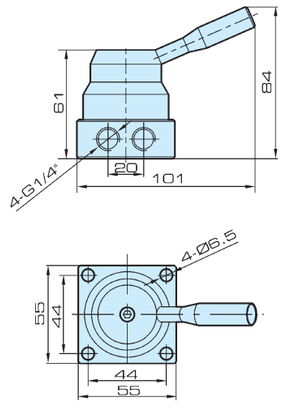

3R110-06

3R210-08

3R310-10

4R110-06

4R210-08

4R310-10

Features

1. We guarantee inner hole roughness within our new processing.
2. New visual style, synchronized with global outstanding product standard.
3. To import German high standard special grease which provides film in order to reduce friction.
4. Valve spool use seals which import from Japan to increase the life time.

Ordering Code

4R	-	2	-	10	-	06
Specification		Series		Position Number		Port Size
4R: 5/2 Way Hand Draw Valve		100 Series		10: Single head Double Position		M5 : M5x0.8
3R: 3/2 Way Hand Draw Valve		200 Series				06 : G1/4"
		300 Series				08 : G1/4"
						10 : G3/8"

Specification

Model	4R110-06	3R110-06	4R210-06	4R210-08	3R210-06	3R210-08	4R310-08	4R310-10	3R310-08	3R310-10
Working Medium	40 Micron Filtered Air									
Port Size	Inlet, Outlet, Exhaust Port = G1/8"			Inlet, Outlet = G1/4" Exhaust Port = G1/8"	Inlet, Outlet, Exhaust Port = G1/8"	Inlet, Outlet, Exhaust Port = G1/4"	Inlet, Outlet, Exhaust Port = G1/4"	Inlet, Outlet = G3/8" Exhaust Port = G1/4"	Inlet, Outlet, Exhaust Port = G1/4"	Inlet, Outlet, Exhaust Port = G3/8"
Effective Cross Section Area	10mm^2(CV=0.56)		14mm^2 (CV=0.78)	16mm^2 (CV=0.89)	14mm^2 (CV=0.78)	16mm^2 (CV=0.89)	25mm^2 (CV=1.40)	30mm^2 (CV=1.68)	25mm^2 (CV=1.40)	30mm^2 (CV=1.68)
Working Pressure	0 ~ 0.8MPa									
Working Temperature	-20 ~ 70℃									
Position Number	5/2 way	3/2 way	5/2 way		3/2 way		5/2 way		3/2 way	

Valve
J4V100
J4V200
J4V300
J4V400
SV
5V100
5V200
5V300
5V400
Manifold
MCS
JVT307
JSY
5JV
JEL
MVSD
VF
BM
551
JEL10
3VJZF
Diaphragm
JELVD
JELMP
JELP/G
Coil
3V1
2P
2V
2W
2W(Big)
2L
VX
PU
PU225
2Q
JEL5404
JEL6213
BU
Pulse
JEL.JZF
4H
TSV
MPV
4HV
HV, K
4R
4F210
FV
MSV
JM
ASC, RE
QE, QEA
ST
HSV

JELPC® | JELPC — China Pneumatic

Valve
J4V100
J4V200
J4V300
J4V400
SV
5V100
5V200
5V300
5V400
Manifold
MCS
JVT307
JSY
5JV
JEL
MVSD
VF
BM
551
JEL10
3VJZF
Diaphragm
JELVD
JELMP
JELP/G
Coil
3V1
2P
2V
2W
2W(Big)
2L
VX
PU
PU225
2Q
JEL5404
JEL6213
BU
Pulse
JEL.JZF
4H
TSV
MPV
4HV
HV, K
4R
4F210
FV
MSV
JM
ASC, RE
QE, QEA
ST
HSV

Internal Structure

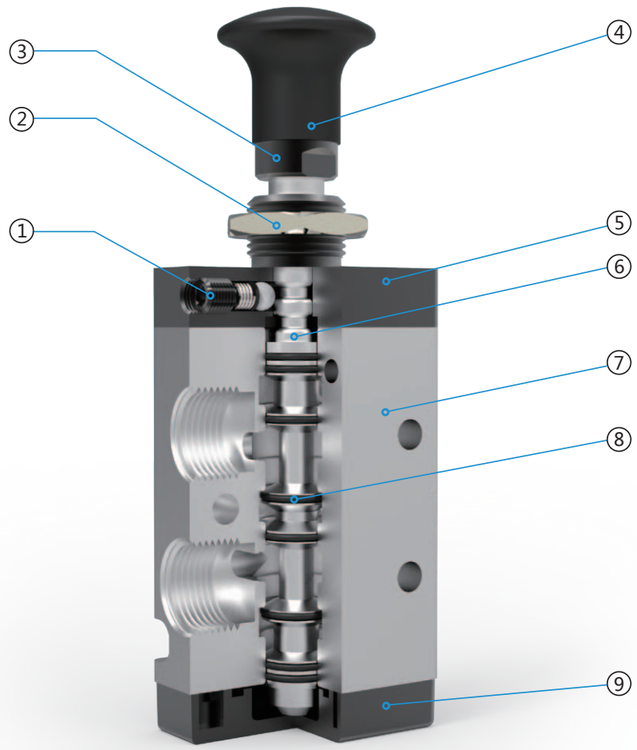

Parts

Number	Name	Number	Name
1	Set screw	6	Valve spool
2	Hexagon nut	7	Valve body
3	Lock nut	8	Flat ring
4	Handle	9	Cover
5	Top cover		

ISO9001:2008 CE

Overall Dimension

4R110-M5

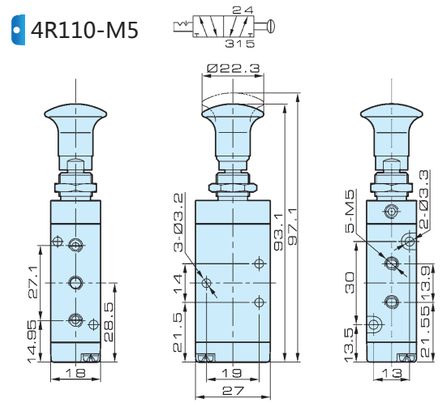

4R110-06

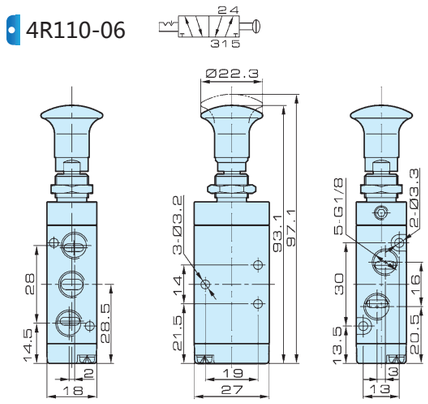

4R210-06

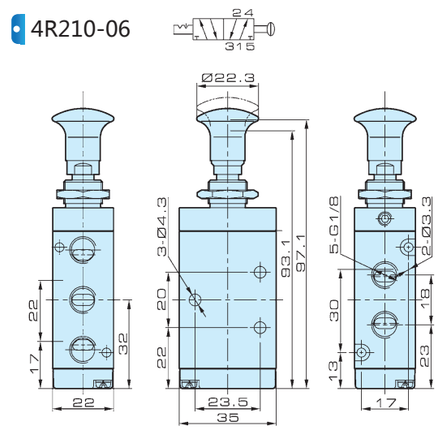

4R210-08

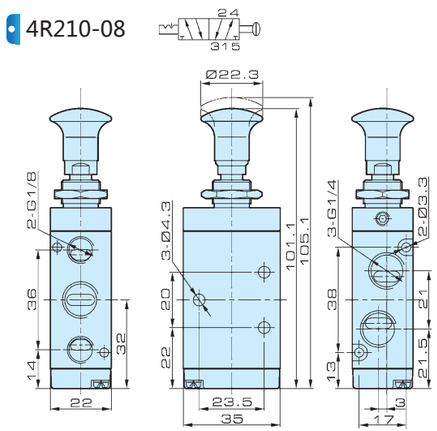

4R310-08

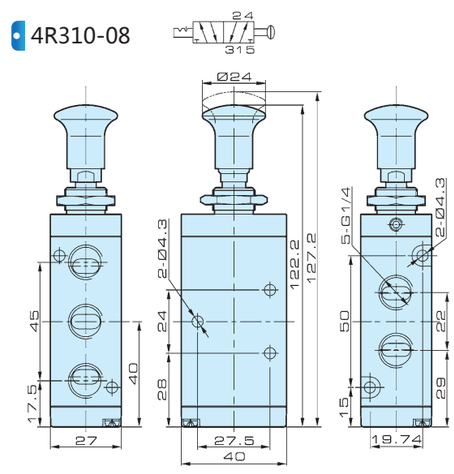

4R310-10

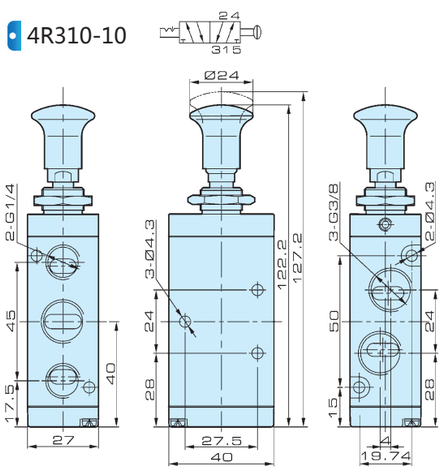

Valve
J4V100
J4V200
J4V300
J4V400
SV
5V100
5V200
5V300
5V400
Manifold
MCS
JVT307
JSY
5JV
JEL
MVSD
VF
BM
551
JEL10
3VJZF
Diaphragm
JELVD
JELMP
JELP/G
Coil
3V1
2P
2V
2W
2W(Big)
2L
VX
PU
PU225
2Q
JEL5404
JEL6213
BU
Pulse
JEL.JZF
4H
TSV
MPV
4HV
HV, K
4R
4F210
FV
MSV
JM
ASC, RE
QE, QEA
ST
HSV

JELPC® | JELPC — China Pneumatic

Overall Dimension

3R110-M5

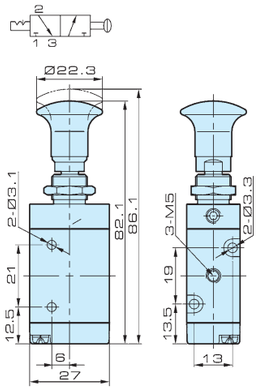

3R110-06

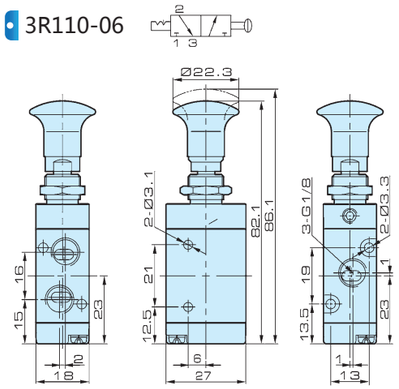

3R210-06

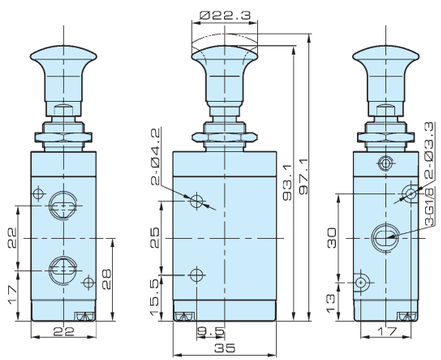

3R210-08

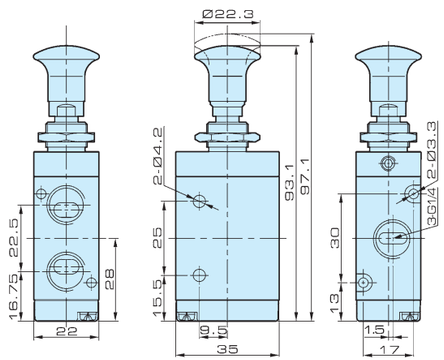

3R310-08

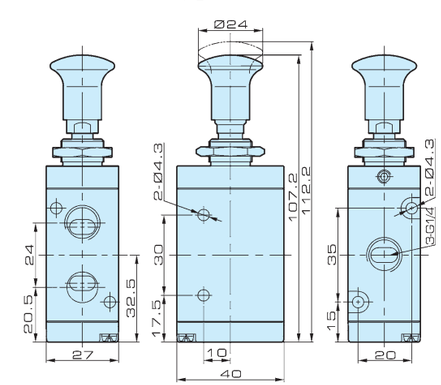

3R310-10

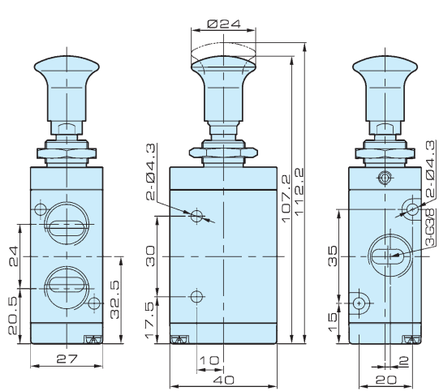

Features

1. Renew apprearance to improve sense quality
2. Renew the lock structure to improve products reliability.

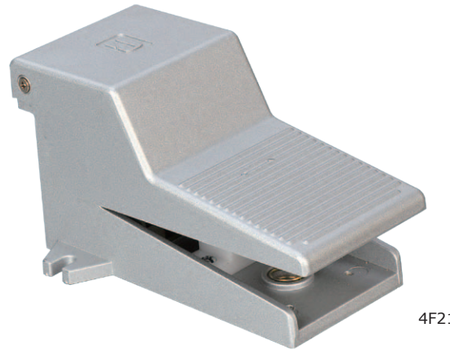

4F210-08L

Ordering Code

4F	-	2	-	10	-	08	-	L
Specification		Series		Position Number		Port Size		Type
4F: 5/2 way foot valve		2: 200 Series		10: Single head double position		08 : G1/4"		Blank : Standard type L : With lock G : With protecting cover LG : With lock and protecting cover

Specification

Model	4F210-08	4F210-08L	4F210-08G	4F210-08LG
Working Medium	40 Micron Filtered Air			
Position Number	5/2 way			
Port Size	Inlet, Outlet, Exhaust Port = G1/4"			
Operation	Direct			
Working Pressure	0～0.8MPa			
Working Temperature	-20～70℃			

Valve
J4V100
J4V200
J4V300
J4V400
SV
5V100
5V200
5V300
5V400
Manifold
MCS
JVT307
JSY
5JV
JEL
MVSD
VF
BM
551
JEL10
3VJZF
Diaphragm
JELVD
JELMP
JELP/G
Coil
3V1
2P
2V
2W
2W(Big)
2L
VX
PU
PU225
2Q
JEL5404
JEL6213
BU
Pulse
JEL.JZF
4H
TSV
MPV
4HV
HV, K
4R
4F210
FV
MSV
JM
ASC, RE
QE, QEA
ST
HSV

Valve
J4V100
J4V200
J4V300
J4V400
SV
5V100
5V200
5V300
5V400
Manifold
MCS
JVT307
JSY
5JV
JEL
MVSD
VF
BM
551
JEL10
3VJZF
Diaphragm
JELVD
JELMP
JELP/G
Coil
3V1
2P
2V
2W
2W(Big)
2L
VX
PU
PU225
2Q
JEL5404
JEL6213
BU
Pulse
JEL.JZF
4H
TSV
MPV
4HV
HV, K
4R
4F210
FV
MSV
JM
ASC, RE
QE, QEA
ST
HSV

JELPC — China Pneumatic

Internal Structure

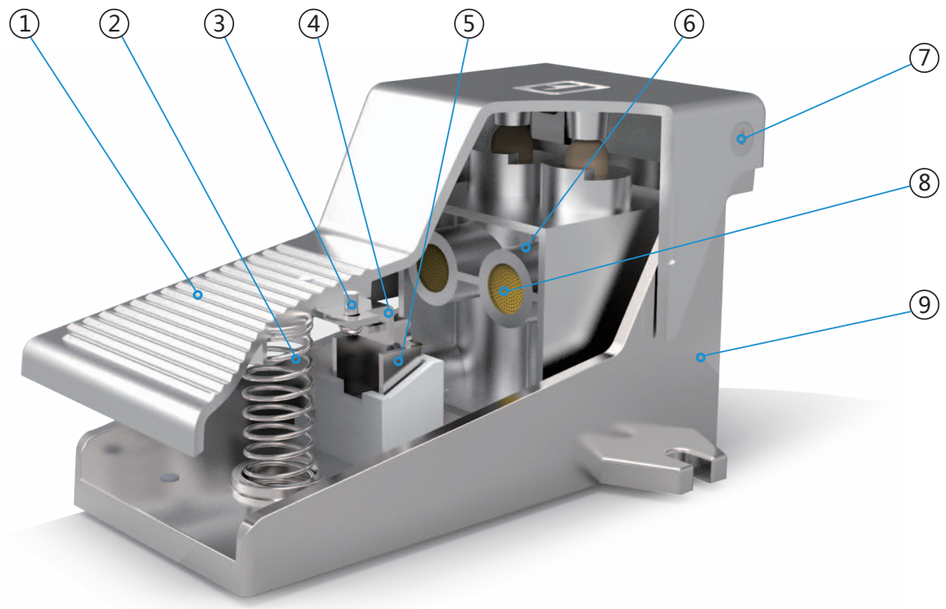

Parts

Number	Name	Number	Name
1	Pedal	6	Valve body
2	Spring	7	Screw
3	Screw	8	Sliencer
4	Hook	9	Valve base
5	Lock		

ISO9001:2008 CE

Overall Dimension

4F210-08

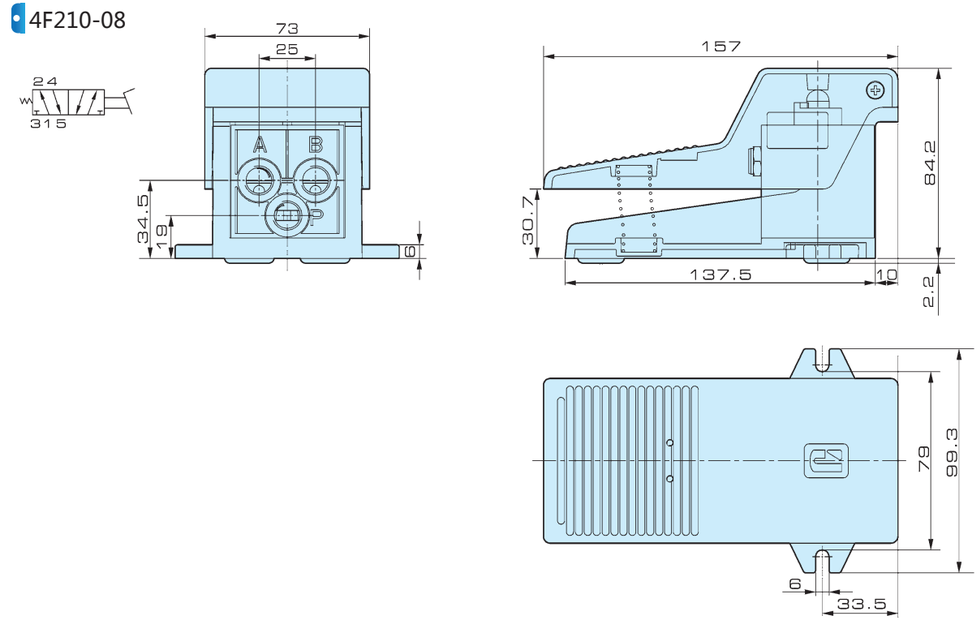

4F210-08L

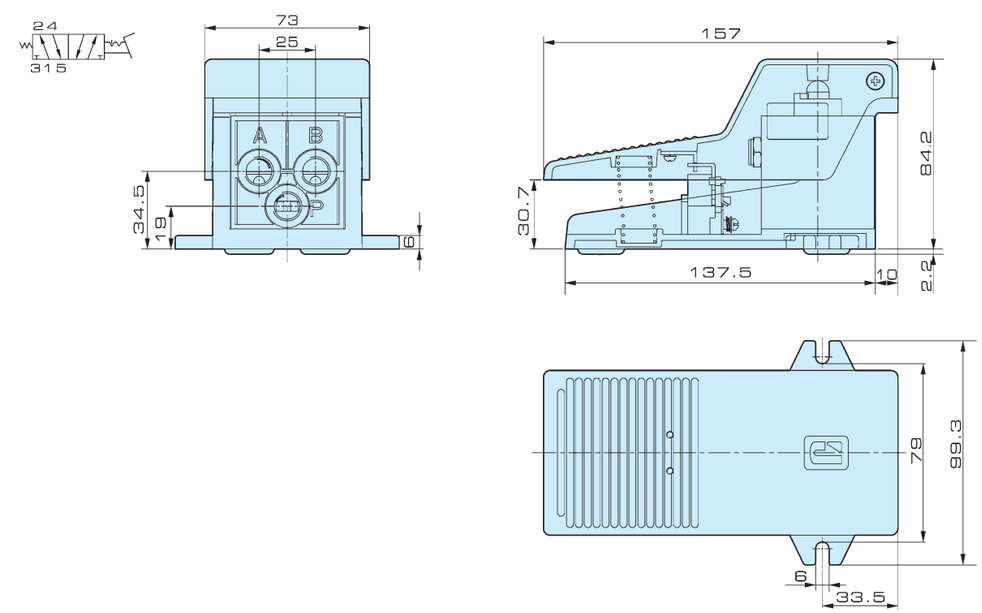

Valve
J4V100
J4V200
J4V300
J4V400
SV
5V100
5V200
5V300
5V400
Manifold
MCS
JVT307
JSY
5JV
JEL
MVSD
VF
BM
551
JEL10
3VJZF
Diaphragm
JELVD
JELMP
JELP/G
Coil
3V1
2P
2V
2W
2W(Big)
2L
VX
PU
PU225
2Q
JEL5404
JEL6213
BU
Pulse
JEL.JZF
4H
TSV
MPV
4HV
HV, K
4R
4F210
FV
MSV
JM
ASC, RE
QE, QEA
ST
HSV

JELPC® | JELPC — China Pneumatic

ISO9001:2008 CE

Valve
J4V100
J4V200
J4V300
J4V400
SV
5V100
5V200
5V300
5V400
Manifold
MCS
JVT307
JSY
5JV
JEL
MVSD
VF
BM
551
JEL10
3VJZF
Diaphragm
JELVD
JELMP
JELP/G
Coil
3V1
2P
2V
2W
2W(Big)
2L
VX
PU
PU225
2Q
JEL5404
JEL6213
BU
Pulse
JEL.JZF
4H
TSV
MPV
4HV
HV, K
4R
4F210
FV
MSV
JM
ASC, RE
QE, QEA
ST
HSV

Overall Dimension

4F210-08G

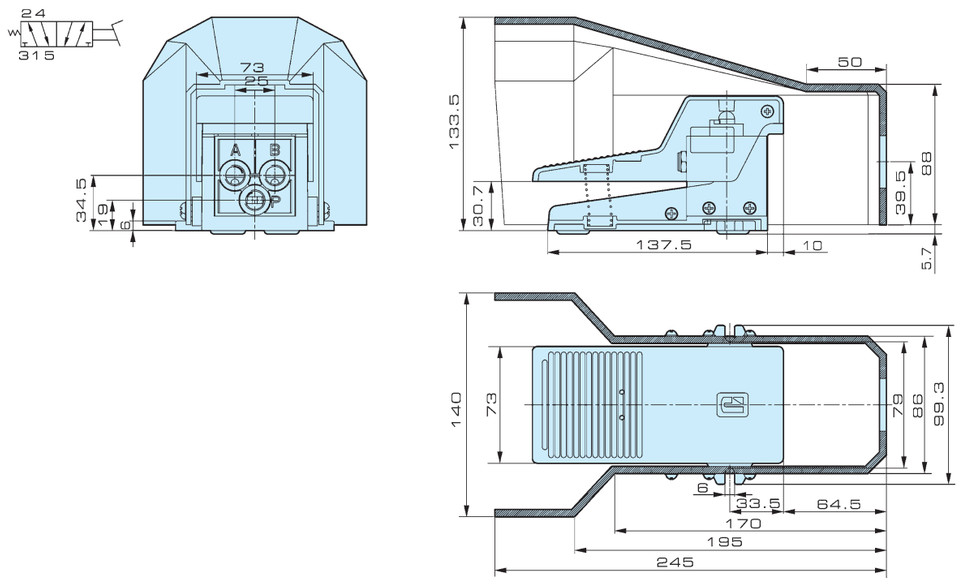

4F210-08LG

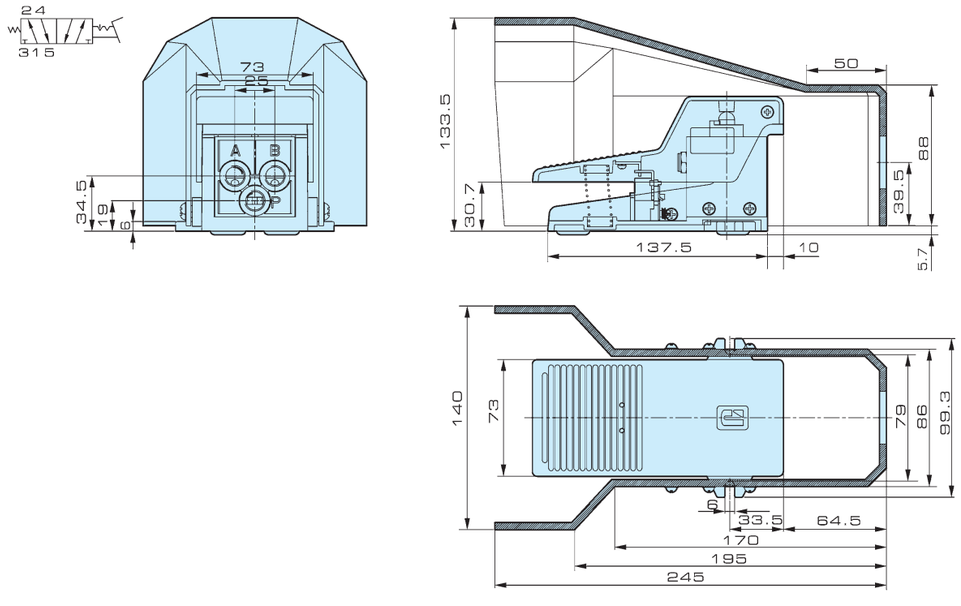

FV320

FV420

Ordering Code

FV	-	320
Specification		Position Number
Foot Valve		320 : 3/2 way
		420 : 4/2 way

Specification

Model	FV420	FV320
Working Medium	40 Micron Filtered Air	
Position Number	4/2 way	3/2 way
Port Size	Inlet, Outlet = G1/4"	Exhaust Port = G1/8"
Operation	Direct	
Working Pressure	0 ~ 0.8 MPa	
Working Temperature	-20 ~ 70°C	

Overall Dimension

FV420

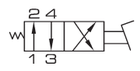

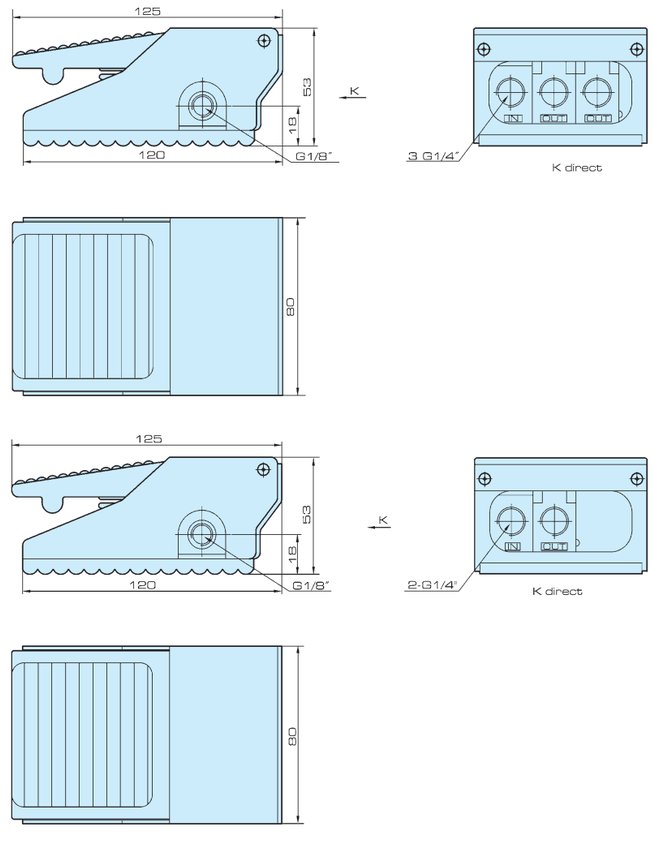

FV320

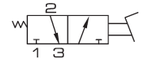

JELPC® | JELPC — China Pneumatic

MSV86321 MSV86321EB MSV86321LB MSV86321TB MSV86321PP MSV86321PPL MSV86321PB MSV86321R

MSV86522 MSV86522EB MSV86522LB MSV86522TB MSV86522PP MSV86522PPL MSV86522PB MSV86522R

MSV98322 MSV98322EB MSV98322LB MSV98322TB MSV98322PP MSV98322PPL MSV98322PB MSV98322R

Ordering Code

MSV	-	86	-	32	-	1	-	R
Specification		Series		Position Number		Port Size		Button
Mechanical Valve		98 Series		32: 3/2 way		1: G 1/8"		Blank: Plunger
		86 Series		52: 5/2 way		2: G 1/4"		R: Roller
								TB: Selector knob
								LB: Long selector knob
								PB: Mushroom head button
								PP: Push button
								PPL: Raised push button
								EB: Emergency push button with lock

Specification

Model	MSV86321	MSV86522	MSV98322
Working Medium	40 Micron Filtered Air		
Valve Type	3/2 Way	5/2 Way	3/2 Way
Working Pressure	0～0.8 MPa	0～0.8 MPa	0～0.8 MPa
Ambient Temperature	-20～70℃		
Effective Cross Section Area	12mm²(CV=0.67)	16mm²(CV=0.89)	16mm²(CV=0.89)
Port Size	G1/8"	G1/4"	G1/4"

ISO9001:2008 CE

Overall Dimension

MSV86522

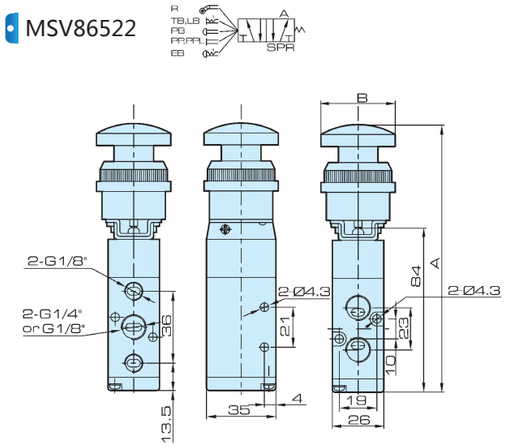

MSV98322

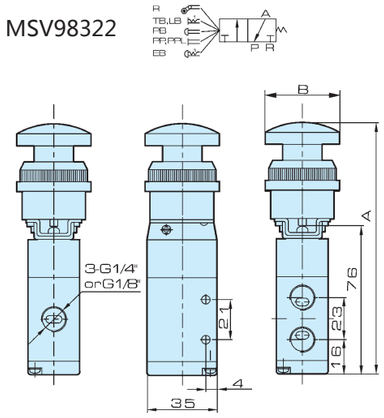

MSV86321

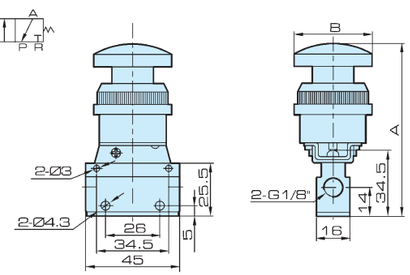

Dimension

Series	Symbol / Model	PP	PPL	LB	TB	EB	PB	R
MSV86522	A	114	119	133	136.5	134	131	107.5
	B	39.5	24.5	26.5	36.5	39.5	37.5	42.5
MSV98322	A	106	111	125	129.5	126	123	99.5
	B	39.5	24.5	26.5	36.5	39.5	37.5	425.5
MSV86321	A	66	71	85	88.5	86	83	59.5
	B	39.5	24.5	26.5	36.5	39.5	37.5	42.5

PP

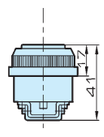

PPL

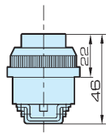

TB

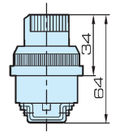

LB

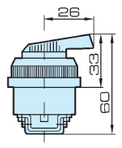

PB

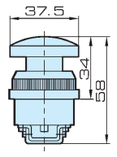

EB

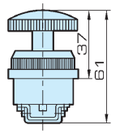

R

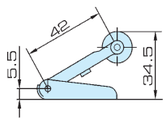

Valve
J4V100
J4V200
J4V300
J4V400
SV
5V100
5V200
5V300
5V400
Manifold
MCS
JVT307
JSY
5JV
JEL
MVSD
VF
BM
551
JEL10
3VJZF
Diaphragm
JELVD
JELMP
JELP/G
Coil
3V1
2P
2V
2W
2W(Big)
2L
VX
PU
PU225
2Q
JEL5404
JEL6213
BU
Pulse
JEL.JZF
4H
TSV
MPV
4HV
HV, K
4R
4F210
FV
MSV
JM
ASC, RE
QE, QEA
ST
HSV

JM Series
Mechanical Valve

JELPC® | JELPC — China Pneumatic

JM-05

JM-06

JM-06A

JM-07

Ordering Code

JM	-	05
Specification		Button
Stop-type Mechanical Valve		05: Selector knob
		06: Emergency push button with lock
		06A: Push button
		07: Roller

Symbol

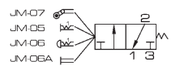

Specification

Model	JM-05	JM-06	JM-06A	JM-07
Working Medium	40 Micron Filtered Air			
Working Pressure	0～0.8MPa			
Ambient Temperature	-20～70℃			
Valve Type	3/2 way			
Port Size	G1/4"			

Overall Dimension

JM

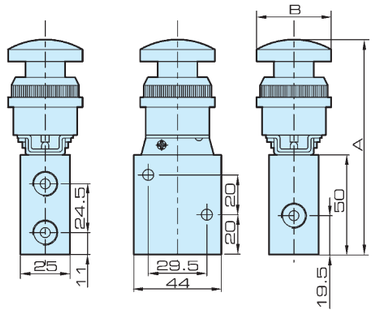

Dimension

Model	A	B
JM-05	114	36.5
JM-06	111	39.5
JM-06A	96	39.5
JM-07	84.5	42.5

ISO9001:2008 CE

ASC, RE Series
Flow Control Valve

ASC-08B

ASC-06

ASC-08

ASC-10

ASC-15

RE-01

RE-02

RE-03

RE-04

Ordering Code

ASC	-	06	RE	-	01
Series Code		Port Size	Series Code		Port Size
ASC: Precision Flow Control Valve		06: G 1/8"	RE: Standard flow control valve		01: G 1/8"
		08: G 1/4"			02: G 1/4"
		10: G 3/8"			03: G 3/8"
		15: G 1/2"			04: G 1/2"

Symbol

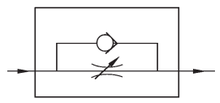

Specification

Model	Accurate Type				Ordinary Type			
	ASC-06	ASC-08	ASC-10	ASC-15	RE-01	RE-02	RE-03	RE-04
Port Size	G1/8"	G1/4"	G3/8"	G1/2"	G1/8"	G1/4"	G3/8"	G1/2"
Working Medium	Air							
Working Pressure	0～0.95MPa							
Ambient Temperature	-20～70℃							

* ASC-08B installation conforms to NUMAR standard to control the speed of executive unit.

Valve
J4V100
J4V200
J4V300
J4V400
SV
5V100
5V200
5V300
5V400
Manifold
MCS
JVT307
JSY
5JV
JEL
MVSD
VF
BM
551
JEL10
3VJZF
Diaphragm
JELVD
JELMP
JELP/G
Coil
3V1
2P
2V
2W
2W(Big)
2L
VX
PU
PU225
2Q
JEL5404
JEL6213
BU
Pulse
JEL.JZF
4H
TSV
MPV
4HV
HV, K
4R
4F210
FV
MSV
JM
ASC,RE
QE, QEA
ST
HSV

Overall Dimension

ASC-08B

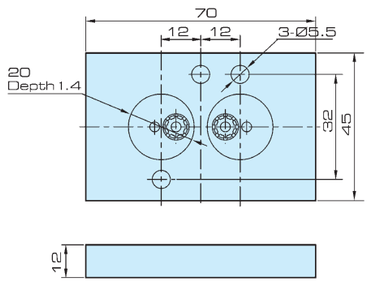

ASC Series

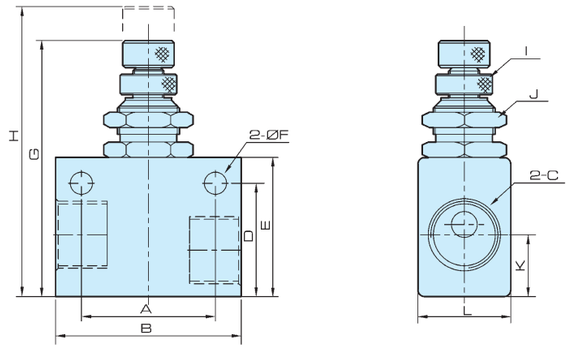

Dimension

Model Symbol	A	B	C	D	E	F	G	H	I	J	K	L
ASC-06	22	32	G1/8	22	27	4.3	49.7	56.5	M6X0.5	M12X0.75	12	18
ASC-08	26	36	G1/4	22	27	4.3	49.7	56.5	M6X0.5	M12X0.75	12	18
ASC-10	28	40	G3/8	25	30	4.3	52.7	59.5	M6X0.5	M12X0.75	13	22
ASC-15	28	40	G1/2	30	35	4.3	58.7	65.5	M6X0.5	M12X0.75	13.5	26

Overall Dimension

RE Series

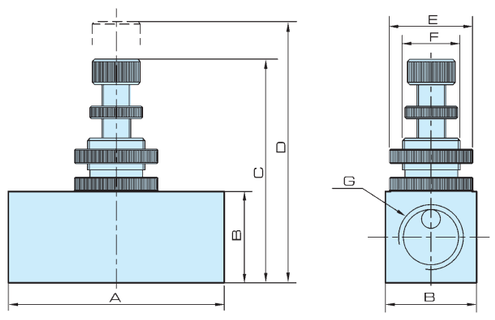

Dimension

Model / Symbol	A	B	C	D	E	F	G
RE-01	45	19	43	50	Φ19	M14×1	G1/8
RE-02	45	19	43	50	Φ19	M14×1	G1/4
RE-03	55	25	55	62	Φ25	M18×1	G3/8
RE-04	55	25	55	62	Φ25	M18×1	G1/2

QEA-01

QE-01

QE-02

QE-03

Ordering Code

QE	-	01
Series Code		Port Size
QE: Quick Exhaust Valve		01: G1/8"
QEA: Quick Exhaust Valve		02: G1/4"
		03: G3/8"
		04: G1/2"
		06: G3/4"

Symbol

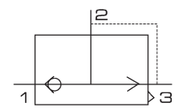

Specification

Model	QE-01	QE-02	QE-03	QE-04	QE-06
Port Size	G1/8"	G1/4"	G3/8"	G1/2"	G3/4"
Effective Cross Section Area	16 mm^2	27.5 mm^2	28 mm^2	71 mm^2	72.5 mm^2
Working Medium	Air				
Working Pressure	0～1.0MPa				
Ambient Temperature	-20～70℃				

Overall Dimension

QE Series

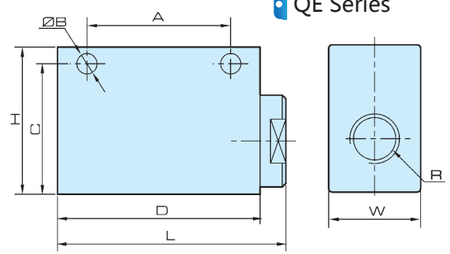

QEA Series

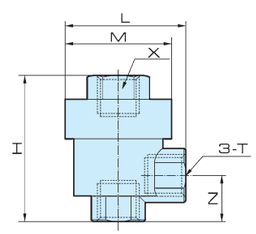

Dimension

Model/ Symbol	R	Bore	L	W	H	A	B	C	D
QE-01	G1/8	G1/4	46	20	32	30	4.3	27	40
QE-02	G1/4	G3/8	61	25	40	39	5.5	33	55
QE-03	G3/8	G3/8	61	25	40	39	5.5	33	55
QE-04	G1/2	G3/8	52.5	28	36	-	-	-	48
QE-06	G3/4	G3/4	98	38	64	60	8.5	51	90

Model/ Symbol	T	H	L	M	N	X
QEA-01	G1/8	40	32	28	12	14
QEA-02	G1/4	45	38	33.5	14	17
QEA-03	G3/8	55.5	47	39	15.5	22
QEA-04	G1/2	62	55	43	22	24
QEA-06	G3/4	91	66	53	35	34

ST Series
Shuttle Valve

JELPC — China Pneumatic

Valve
J4V100
J4V200
J4V300
J4V400
SV
5V100
5V200
5V300
5V400
Manifold
MCS
JVT307
JSY
5JV
JEL
MVSD
VF
BM
551
JEL10
3VJZF
Diaphragm
JELVD
JELMP
JELP/G
Coil
3V1
2P
2V
2W
2W(Big)
2L
VX
PU
PU225
2Q
JEL5404
JEL6213
BU
Pulse
JEL.JZF
4H
TSV
MPV
4HV
HV, K
4R
4F210
FV
MSV
JM
ASC, RE
QE, QEA
ST
HSV

ST-01

ST-02

Ordering Code

ST	-	01
Series Code		Port Size
ST : Shuttle Valve		01: G1/8″
		02: G1/4″
		03: G3/8″
		04: G1/2″
		06:G3/4″
		08: G1″

Symbol

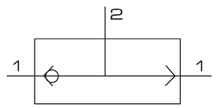

Specification

Model	ST-01	ST-02	ST-03	ST-04	ST-06	ST-08
Working Medium	Air					
Effective Cross Section Area	G1/8″	G1/4″	G3/8″	G1/2″	G3/4″	G1″
Port Size	7.5 mm^2	21 mm^2	40 mm^2	60 mm^2	110 mm^2	190 mm^2
Working Pressure	0～1.0MPa					
Ambient Temperature	-20～70℃					

Overall Dimension

ST Series

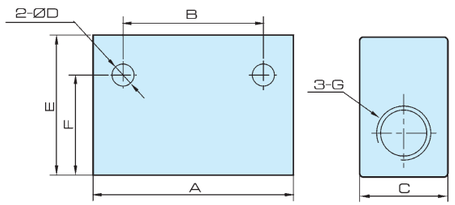

Dimension

Model Symbol	A	B	C	D	E	F	G
ST-01	40	24	16	4.5	25	20.5	G1/8″
ST-02	50	35	22	5.5	35	25	G1/4″
ST-03	75	48	30	7	50	42	G3/8″
ST-04	75	48	30	7	50	42	G1/2″
ST-06	110	72	40	7	70	58	G3/4″
ST-08	110	72	40	7	70	58	G1″

ISO9001:2008 CE

Hand Sliding Valve

HSV-01

HSV-02

HSV-03

HSV-04

Valve
J4V100
J4V200
J4V300
J4V400
SV
5V100
5V200
5V300
5V400
Manifold
MCS
JVT307
JSY
5JV
JEL
MVSD
VF
BM
551
JEL10
3VJZF
Diaphragm
JELVD
JELMP
JELP/G
Coil
3V1
2P
2V
2W
2W(Big)
2L
VX
PU
PU225
2Q
JEL5404
JEL6213
BU
Pulse
JEL.JZF
4H
TSV
MPV
4HV
HV, K
4R
4F210
FV
MSV
JM
ASC, RE
QE, QEA
ST
HSV

Ordering Code

HSV	-	01
Series		Port Size
Hand sliding series		01: G1/8″
		02: G1/4″
		03: G3/8″
		04: G1/2″

Feature

2/3 Hand sliding valve can be used as switch of Air source. When Air source is switched off, the remained air in system can be released.

Specification

Model	HSV-01	HSV-02	HSV-03	HSV-04
Port Size	G1/8″	G1/4″	G3/8″	G1/2″
Orifice Size	4mm	7mm	10mm	12mm
Working Medium	Filtered and Compressed Air			
Working Pressure	0~1.0MPa			
Ambient Temperature	-20～70℃			
Operating Force	20N			

Overall Dimension

Female thread

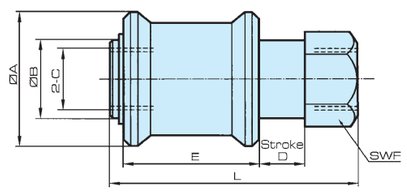

Male thread

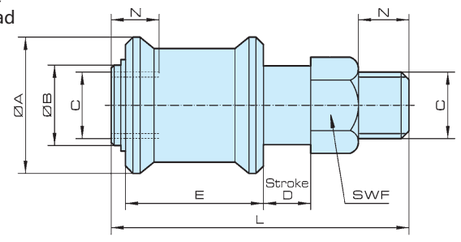

Dimension

Model/ Symbol	A	B	C	D	E	F	L
HSV-01N	20	13	G1/8	5.5	20	14	32
HSV-02N	27	18	G1/4	9.5	32	19	48
HSV-03N	30	21	G3/8	9.5	32	22	48
HSV-04N	38	24	G1/2	17	40	27	70

Model/ Symbol	A	B	C	D	E	F	N	L
HSV-01	20	13	G1/8	5.5	20	14	6	38
HSV-02	27	18	G1/4	9.5	32	19	10	58
HSV-03	30	21	G3/8	9.5	32	22	10	58
HSV-04	38	24	G1/2	17	40	27	10	80

1

Control Element

2

JELPC®

3

Execution Element

4

Pneumatic Accessory

AIR SOURCE TREATMENT UNIT

AIR SOURCE TREATMENT UNIT CONTENTS

2-01 AC, BC Series Three-point Combination (F.R.L. Combination)

2-02 AFC, BFC Series Two-point Combination (FR.L. Combination)

2-04 AF, BF Series Filter

2-05 AR, BR Series Regulator

2-06 AFR, BFR Series Filter & Regulator

2-07 AL, BL Series Lubricator

2-08 JAC Series 1000~5000 Air Filter Combination (F.R.L. Combination)

2-09 JAC Series 1010~5010 Air Filter Combination (FR.L. Combination)

2-11 JAF Series 1000~5000 Air Filter

2-12 JAR Series 1000~5000 Regulator

2-14 JAW Series 1000~5000 Filter & Regulator

2-15 JAL Series 1000~5000 Lubricator

2-17 JC Series Air Filter Combination (3 or 2 Combination)

2-19 FE Series Air Filter Combination (2 Combination)

2-23 GC Series Air Source Treatment (3 or 2 Combination)

2-25 ZYR10 Series Oxygen Supply Regulator

2-26 MAR300LK Series Handle Regulator

2-28 PTH Series Air Filter Combination

2-30 JAD Series Auto-drain

2-31 DPS Seris Digital Pressure Sensor

2-32 HL Series Compressed Air Filter

AC, BC Series
Three-point Combination (F.R.L. Combination)

JELPC® | JELPC — China Pneumatic

AC2000

AC2000

BC(2000～4000)

Ordering Code

BC	-	3000	-	D
Model		Port size		Drain Type

Model

AC: Small

BC: Medium

Port size

- 1500: G 1/8"
- 2000: G 1/4"
- 3000: G 3/8"
- 4000: G 1/2"

Drain Type

- Blank: Semi-automatic
- D: Automatic
- * Not applied to AC

Symbol

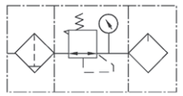

Specification

Model		AC1500	AC2000	BC2000	BC3000	BC4000
Operating Fluid		Air				
Port Size		G 1/8"	G 1/4"	G 1/4"	G 3/8"	G 1/2"
Filter Precision		40 μ				
Range of Adjustable Pressure		0.05～0.85 MPa				
Max. Adjustable Pressure		0.95 MPa				
Proof Pressure Resistance		1.5 MPa				
Operating Temperature Range		5～60 ℃				
Capacity of Filter Cup		15 cc		60 cc		
Capacity of oil Cup		25 cc		90 cc		
Recommedned Lubricant		ISO VG 32 or Same Grade Oil				
Weight		0.7 KG		0.9 KG		
Material	Body	Aluminum Alloy Die-casting Forming				
	Container Cup	PC				
	Protective Cover	-		Iron		
Components	Filter Regulator	AF1500	AF2000	BF2000	BF3000	BF4000
	Regulator	AR1500	AR2000	BR2000	BR3000	BR4000
	Lubricator	AL1500	AL2000	BL2000	BL3000	BL4000

CE
ISO9001:2008

AFC, BFC Series
Two-point Combination (FR.L. Combination)

AFC2000

AFC2000

BFC(2000～4000)

Ordering Code

BFC	-	3000	-	D
Model		Port size		Drain Type

Model

AFC: Small

BFC: Medium

Port size

- 1500: G1/8"
- 2000: G1/4"
- 3000: G3/8"
- 4000: G1/2"

Drain Type

- Blank: Semi-automatic
- D: Automatic
- * Not applied to AFC

Symbol

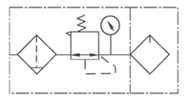

Specification

Model		AFC1500	AFC2000	BFC2000	BFC3000	BFC4000
Operating Fluid		Air				
Port Size		G 1/8"	G 1/4"	G 1/4"	G 3/8"	G 1/2"
Filter Precision		40 μ				
Range of Adjustable Pressure		0.05～0.85 MPa				
Max. Adjustable Pressure		0.95 MPa				
Proof Pressure Resistance		1.5 MPa				
Operating Temperature Range		5～60 ℃				
Capacity of Filter Cup		15 cc		60 cc		
Capacity of oil Cup		25 cc		90 cc		
Recommedned Lubricant		ISO VG 32 or Same Grade Oil				
Weight		0.5 KG		0.7 KG		
Material	Body	Aluminum Alloy Die-casting Forming				
	Container Cup	PC				
	Protective Cover	-		Iron		
Components	Filter Regulator	AFR1500	AFR2000	BFR2000	BFR3000	BFR4000
	Lubricator	AL1500	AL2000	BL2000	BL3000	BL4000

JELPC — China Pneumatic

AC, BC Series

Three-point Combination (F.R.L. Combination)

Overall Dimension

AC

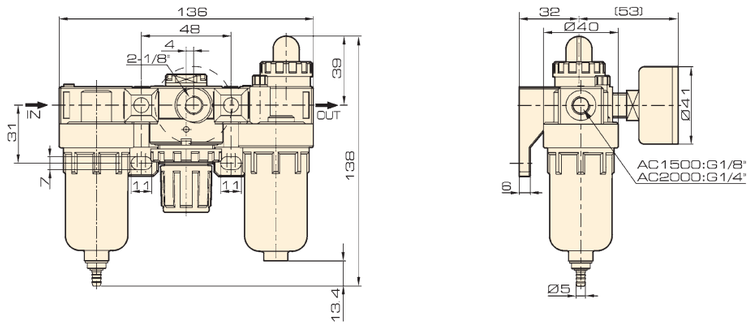

BC

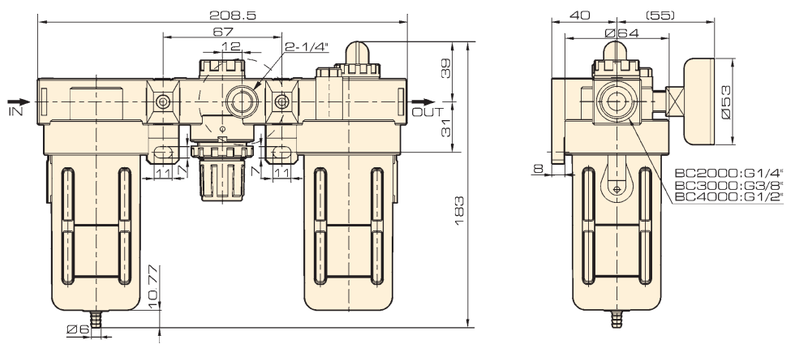

AFC, BFC Series

Two-point Combination (FR.L. Combination)

Overall Dimension

AFC

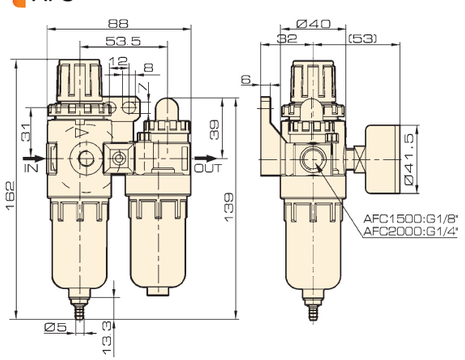

BFC

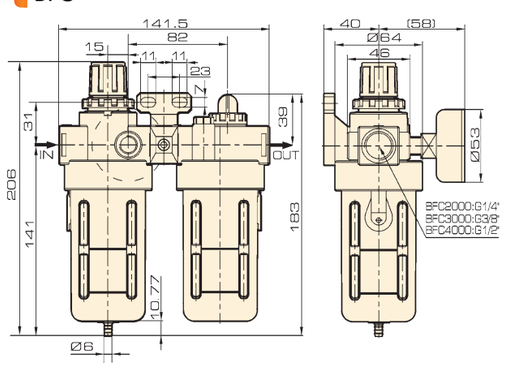

CE
ISO9001:2008

AF, BF Series

Filter

AF2000

BF (2000 ~ 4000)

Ordering Code

BF	-	3000	-	D
Model		Port size		Drain Type
AF : Small		1500: G 1/8"		Blank: Semi-automatic
		2000: G 1/4"		D: Automatic
BF : Medium		3000: G 3/8"		* Not applied to AF
		4000: G 1/2"		

Symbol

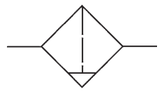

Specification

Model		AF1500	AF2000	BF2000	BF3000	BF4000
Operating Fluid		Air				
Port Size		G 1/8"	G 1/4"	G 1/4"	G 3/8"	G 1/2"
Filter Precision		40 μ				
Proof Pressure Resistance		1.5 MPa				
Operating Temperature Range		5 ~ 60 ℃				
Capacity of Filter Cup		15 cc		60 cc		
Weight		0.14 KG		0.33 KG		
Material	Body	Aluminum Alloy Die-casting Forming				
	Container Cup	PC				
	Protective Cover	-		Iron		

Overall Dimension

AF

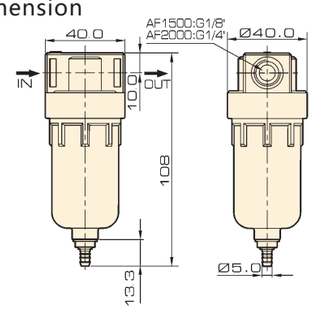

BF

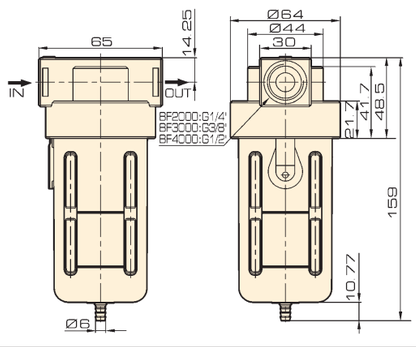

AR, BR Series
Regulator

JELPC® | JELPC — China Pneumatic

BR (2000～4000)

AR2000

AR2000

Ordering Code

BR	-	3000
Model		Port Size
AR : Small		1500: G 1/8″
BR : Medium		2000: G 1/4″
		3000: G 3/8″
		4000: G 1/2″

Symbol

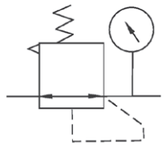

Specification

Model	AR1500	AR2000	BR2000	BR3000	BR4000
Operating Fluid	Air				
Port Size	G 1/8″	G 1/4″	G 1/4″	G 3/8″	G 1/2″
Range of Adjustable Pressure	0.05～0.85 MPa				
Max. Adjustable Pressure	0.95 MPa				
Proof Pressure Resistance	1.5 MPa				
Operating Temperature Range	5～60 ℃				
Weight	0.20 KG		0.23 KG		
Body Material	Aluminum alloy, Die-casting Forming				

Overall Dimension

AR

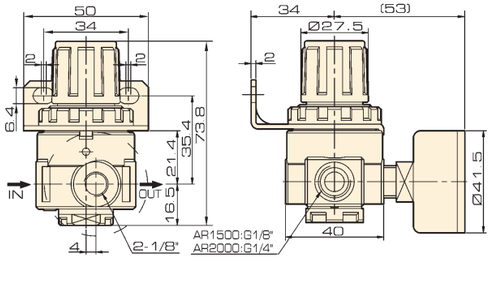

BR

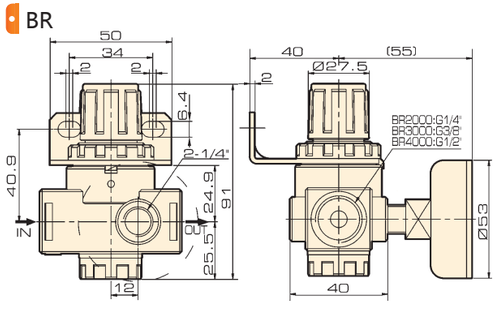

CE
ISO9001:2008

AFR, BFR Series
Filter & Regulator

AFR2000

AFR2000

BFR(2000～4000)

Ordering Code

BFR	-	2000	-	D
Model		Port size		Drain Type
AFR: Small		1500: G 1/8″		Blank: Semi-automatic
BFR: Medium		2000: G 1/4″		D: Automatic
		3000: G 3/8″		* Not applied to AFR
		4000: G 1/2″		

Symbol

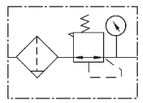

Specification

Model		AFR1500	AFR2000	BFR2000	BFR3000	BFR4000
Operating Fluid		Air				
Port Size		G 1/8″	G 1/4″	G 1/4″	G 3/8″	G 1/2″
Range of Adjustable Pressure		0.05～0.85 MPa				
Max. Adjustable Pressure		0.95 MPa				
Proof Pressure Resistance		1.5 MPa				
Operating Temperature Range		5～60 ℃				
Capacity of Filter Cup		15 cc		60 cc		
Weight		0.26 KG		0.4 KG		
Material	Body	Aluminum Alloy , Die-casting Forming				
	Container Cup	PC				
	Protective Cover	-		Iron		

Overall Dimension

AFR

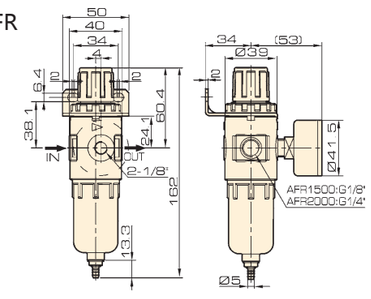

BFR

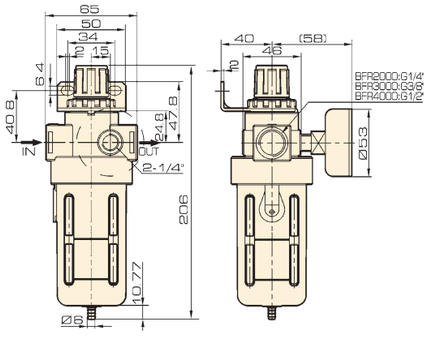

AL, BL Series
Lubricator

JELPC — China Pneumatic

AL2000

AL2000

BL (2000～4000)

Ordering Code

BL	-	3000
Model		Port Size
AL: Small		1500: G 1/8"
BL: Medium		2000: G 1/4"
		3000: G 3/8"
		4000: G 1/2"

Symbol

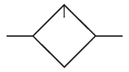

Specification

Model		AL1500	AL2000	BL2000	BL3000	BL4000
Operating Fluid		Air				
Port Size		G 1/8"	G 1/4"	G 1/4"	G 3/8"	G 1/2"
Range of Adjustable Pressure		1.5 MPa				
Proof Pressure Resistance		5～60 ℃				
Operating Temperature Range		ISO VG 32 or Same Grade Oil				
Capacity of Filter Cup		25 cc		90 cc		
Weight		0.17 KG		0.25 KG		
Material	Body	Aluminum Alloy Die-casting Forming				
	Container Cup	PC				
	Protective Cover	-		Iron		

Overall Dimension

AL

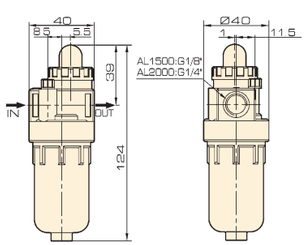

BL

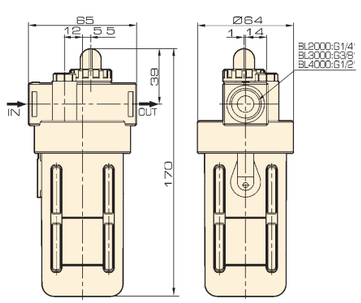

CE
ISO9001:2008

JAC Series 1000～5000
Air Filter Combination (F.R.L. Combination)

JAC2000

JAC4000

Ordering Code

JA	-	C	-	4000	-	04	-	D	-	N
Series		Function		Specification		Port size		Drain Type		Wiring Form
JAC2000-02		F.R.L. Combination		1000		M5: M5 x 0.8		Blank: Semi-automatic		Blank: Standard
JAC3000-03				2000		01: G 1/8"		D: Lever Auto Drain		N: Metal cup
				2500		02: G 1/4"		D1 : Lever auto-drain With external thread		
				3000		03: G 3/8"		D2 : Pulse auto-drain		
				4000		04: G 1/2"				
				5000		06: G 3/4"				
						10: G 1"				

Symbol

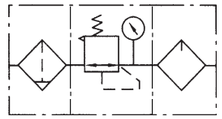

Specification

Model		JAC1000-M5	JAC2000-01	JAC2000-02	JAC2500-02	JAC2500-03	JAC3000-02	JAC3000-03	JAC4000-03	JAC4000-04	JAC4000-06	JAC5000-06	JAC5000-10
Rated Flow		90	500	500	1500	1500	2000	2000	4000	4000	4500	5000	5000
Port Size		M5	1/8	1/4	1/4	3/8	1/4	3/8	3/8	1/2	3/4	3/4	1
Filter Precision		25 μm											
Max. Adjustable Pressure		1.0 MPa											
Proof Pressure Resistance		1.5 MPa											
Operating Temperature Range		5～60 ℃											
Range of Adjustable Pressure		0.05～0.7 MPa	0.05～0.85 MPa										
Recommended Lubricant		ISO VG 32											
Container Material		Poly Carbonate											
Protective Cup Cover		Unavailable			Iron								
Drain Function		Differential Drain	Differential Drain, Automatic Drain										
Valve Type		With Overflow											
Assembly	Filter	JAF1000-M5	JAF2000-01	JAF2000-02	JAF3000-02	JAF3000-02	JAF3000-02	JAF3000-03	JAF4000-03	JAF4000-04	JAF4000-06	JAF5000-06	JAF5000-10
	Regulator	JAR1000-M5	JAR2000-01	JAR2000-02	JAF2500-02	JAF2500-02	JAR3000-02	JAR3000-03	JAR4000-03	JAR4000-04	JAR4000-06	JAR5000-06	JAR5000-10
	Lubricator	JAL1000-M5	JAL2000-01	JAL2000-02	JAL3000-02	JAL3000-02	JAL3000-02	JAL3000-03	JAL4000-03	JAL4000-04	JAL4000-06	JAL5000-06	JAL5000-10

JAC3010-N

JAC2010

JAC4010

Ordering Code

JA	-	C	-	4010	-	04	-	D	-	N
Series		Function		Specification		Port size		Drain Type		Wiring Form
JAC2010-02		FR.L. Combination		1010		M5: M5 x 0.8		Blank: Semi-automatic		Blank: Standard
JAC3010-03				2010		01: G 1/8"		D: Lever Auto Drain		N: Metal cup
JAC3010-03N				3010		02: G 1/4"		D1 : Lever auto-drain With external thread		
				4010		03: G 3/8"		D2 : Pulse auto-drain		
				5010		04: G 1/2"				
						06: G 3/4"				
						10: G 1"				

Symbol

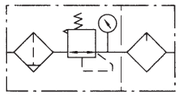

Specification

Model		JAC1010-M5	JAC2010-01	JAC2010-02	JAC3010-02	JAC3010-03	JAC4010-03	JAC4010-04	JAC4010-06	JAC5010-06	JAC5010-10
Rated Flow		90	500	500	1700	1700	3000	3000	3000	4000	4000
Port Size		M5	1/8	1/4	1/4	3/8	3/8	1/2	3/4	3/4	1
Filter Precision		25 μm									
Max. Adjustable Pressure		1.0 MPa									
Proof Pressure Resistance		1.5 MPa									
Operating Temperature Range		5 ~ 60 ℃									
Range of Adjustable Pressure		0.05 ~ 0.7 MPa	0.05 ~ 0.85 MPa								
Recommended Lubricant		ISO VG 32									
Container Material		Poly Carbonate									
Protective Cup Cover		Unavailable			Iron						
Drain Function		Differential Drain	Semi-automatic Drain, Automatic Drain								
Valve Type		With Overflow									
Assembly	Filter Regulator	JAW1000-M5	JAW2000-01	JAW2000-02	JAW3000-02	JAW3000-03	JAW4000-03	JAW4000-04	JAW4000-06	JAW5000-06	JAW5000-10
	Lubricator	JAL1000-M5	JAL2000-01	JAL2000-02	JAL3000-02	JAL3000-03	JAL4000-03	JAL4000-04	JAL4000-06	JAL5000-06	JAL5000-10

JAC Series 1000~5000

Air Filter Combination (F.R.L. Combination)

Overall Dimension

JAC1000 ~ JAC5000

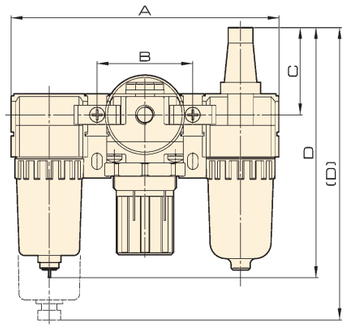

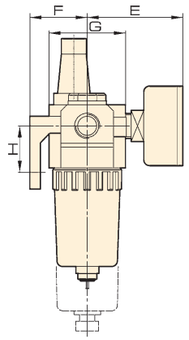

Dimension

Model	Bore	A	B	C	D	E	F	G	H
JAC1000	M5	91	33	25.5	84.5	26	25	25	20
JAC2000	1/8 - 1/4	140	50	45.5	130.5 (152.5)	56.8	30	40	24
JAC2500	1/4 - 3/8	181	64	38	156.5	60.8	41	53	35
JAC3000	1/4 - 3/8	181	64	38	156.5	60.8	41	53	35
JAC4000	3/8 - 1/2	238	84	41	191.5	65.5	50	70	40
JAC4000-06	3/4	253	89	41	193	69.5	50	70	40
JAC5000	3/4 - 1	300	105	48	271.5	75.5	69.8	90	50

JAC Series 1010~5010

Air Filter Combination (FR.L. Combination)

Overall Dimension

JAC1010 ~ JAC5010

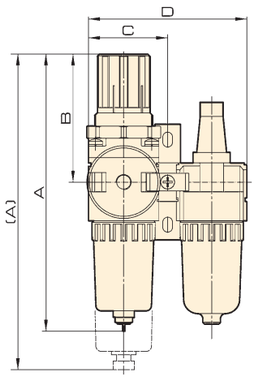

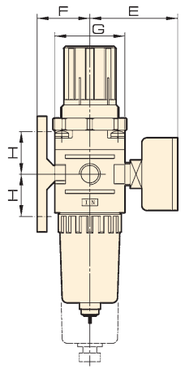

Dimension

Model	Bore	A	B	C	D	E	F	G	H
JAC1010	M5	109.5	50.5	29	58	26	25	25	20
JAC2010	1/8 - 1/4	158 (180)	73	45	90	56.8	30	40	24
JAC3010	1/4 - 3/8	211	92.5	58.5	117	60.8	41	53	35
JAC4010	3/8 - 1/2	262	112	77	154	70.5	50	70	40
JAC4010-06	3/4	267	114	82	164	70.5	50	70	40
JAC5010	3/4 - 1	338	116	97.5	195	75.5	69.8	90	50

FRL
AC, BC
AFC, BFC
AF, BF
AR, BR
AFR, BFR
AL, BL
JAC
JAF
JAR
JAW
JAL
JC
FE
GC
ZYR10
MAR300LK
PTH
JAD
DPS
HL

JAF Series
1000~5000 Air Filter

JELPC® | JELPC — China Pneumatic

JAF2000

JAF4000

Ordering Code

JA - F - 4000 - 04 - D - N

Series	Function	Specification	Port size	Drain Type	Wiring Form
JAF2000-02	Filter	1000	M5: M5 x 0.8	Blank: Semi-automatic	Blank: Standard
JAF3000-03		2000	01: G1/8"	D: Lever Auto Drain	N: Metal cup
		3000	02: G1/4"	D1 : Lever auto-drain With external thread	
		4000	03: G3/8"	D2 : Pulse auto-drain	
		5000	04: G1/2"		
			06: G3/4"		
			10: G1"		

Symbol

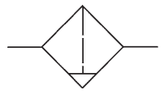

Specification

Model	JAF1000-M5	JAF2000-01	JAF2000-02	JAF3000-02	JAF3000-03	JAF4000-03	JAF4000-04	JAF4000-06	JAF5000-06	JAF5000-10
Rated Flow	110	750	750	1500	1500	4000	4000	6000	7000	7000
Port Size	M5	1/8	1/4	1/4	3/8	3/8	1/2	3/4	3/4	1
Filter Precision	25 μm									
Max. Adjustable Pressure	1.0 MPa									
Proof Pressure Resistance	1.5 MPa									
Ambient Temperature Range	5 ~ 60 ℃									
Container Material	Poly Carbonate									
Container Cup	Unavailable			Iron						
Drain Function	Differential Drain	Semi-automatic Drain, Automatic Drain								

CE
ISO9001:2008

JAR Series
1000~5000 Regulator

JAR2000

JAR4000

Ordering Code

JA - R - 4000 - 04

Series	Function	Specification	Port size
JAR2000-02	Regulator	1000	M5: M5 x 0.8
JAR3000-03		2000	01: G 1/8"
		2500	02: G 1/4"
		3000	03: G 3/8"
		4000	04: G 1/2"
		5000	06: G 3/4"
			10: G 1"

Symbol

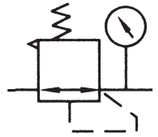

Specification

Model	JAR1000-M5	JAR2000-01	JAR2000-02	JAR2500-02	JAR2500-03	JAR3000-02	JAR3000-03	JAR4000-03	JAR4000-04	JAR4000-06	JAR5000-06	JAR5000-10
Rated Flow	110	550	550	2000	2000	2500	2500	6000	6000	6000	8000	8000
Port Size	M5	1/8	1/4	1/4	3/8	1/4	3/8	3/8	1/2	3/4	3/4	1
Max. Adjustable Pressure	1.0 MPa											
Proof Pressure Resistance	1.5 MPa											
Range of Adjustable Pressure	5 ~ 60 ℃											
Range of Adjustable Pressure	0.05 ~ 0.7 MPa	0.05 ~ 0.85 MPa										
Valve Type	With Overflow											

JAF Series

1000~5000 Air Filter

Overall Dimension

JAF

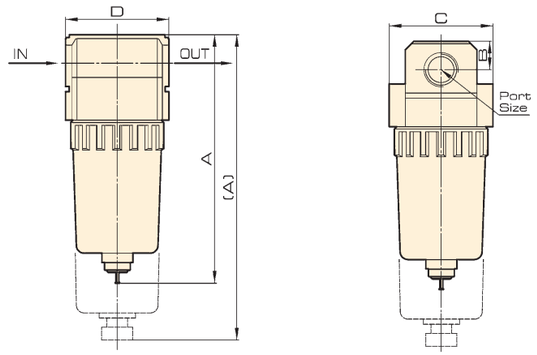

Dimension

Model	Bore	A	B	C	D
JAF1000	M5	66	7	25	-
JAF2000	1/8 - 1/4	96 (118)	11	40	40
JAF3000	1/4 - 3/8	132.5	14	53	53
JAF4000	3/8 - 1/2	168.5	18	70	70
JAF4000-06	3/4	172.5	20	70	70
JAF5000	3/4 - 1	247.5	24	90	90

JAR Series

1000~5000 Regulator

Overall Dimension

JAR

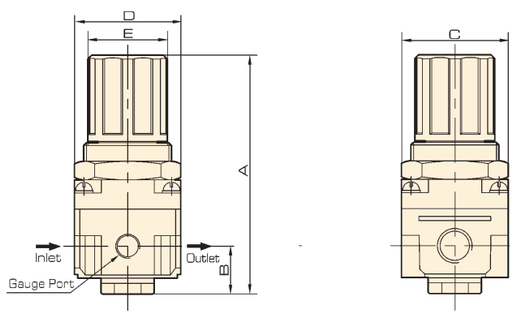

Dimension

Model	Bore	A	B	C	D	E
JAR1000	M5	61.5	11	25	25	28
JAR2000	1/8 - 1/4	95	17	40	40	34
JAR2500	1/4 - 3/8	102.5	25	48	53	34
JAR3000	1/4 - 3/8	127.5	35	53	53	40
JAR4000	3/8 - 1/2	149.5	37.5	70	70	54
JAR4000-06	3/4	154	40.5	70	75	54
JAR5000	3/4 - 1	168	48	90	90	54

Ordering Code

JA	-	W	-	4000	-	04	-	D	-	N
Series		Function		Specification		Port size		Drain Type		Wiring Form
JAW2000-02		Filter & Regulator		1000		M5: M5 x 0.8		Blank: Semi-automatic		Blank: Standard
				2000		01: G 1/8"				N: Metal cup
JAW3000-03				3000		02: G 1/4"		D: Lever Auto Drain		
				4000		03: G 3/8"				
				5000		04: G 1/2"		D1 : Lever auto-drain With external thread		
						06: G 3/4"				
						10: G 1"				
								D2 : Pulse auto-drain		

Symbol

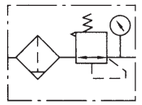

Specification

Model	JAW1000-M5	JAW2000-01	JAW2000-02	JAW3000-02	JAW3000-03	JAW4000-03	JAW4000-04	JAW4000-06	JAW5000-06	JAW5000-10
Rated Flow	100	550	550	2000	2000	4000	4000	4500	5500	5500
Port Size	M5	1/8	1/4	1/4	3/8	3/8	1/2	3/4	3/4	1
Filter Precision	25 μm									
Max. Adjustable Pressure	1.0 MPa									
Proof Pressure Resistance	1.5 MPa									
Operating Temperature Range	5 ~ 60 ℃									
Range of Adjustable Pressure	0.05 ~ 0.7 MPa	0.05 ~ 0.85 MPa								
Container Material	Poly Carbonate									
Container Cup	Unavailable			Iron						
Drain Function	Differential Drain	Semi-automatic Drain, Automatic Drain								
Valve Type	With Overflow									

JELPC® | JELPC — China Pneumatic

JAL2000

JAL4000

Ordering Code

JA	-	L	-	4000	-	04	-	N
Series		Function		Specification		Port size		Wiring Form
JAL2000-02		Lubricator		1000		M5: M5 x 0.8		Blank: Standard
				2000		01: G1/8"		N: Metal cup
JAL3000-03				3000		02: G1/4"		
				4000		03: G3/8"		
				5000		04: G1/2"		
						06: G3/4"		
						10: G1"		

Symbol

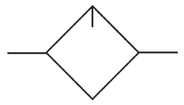

Specification

Model	JAL1000-M5	JAL2000-01	JAL2000-02	JAL3000-02	JAL3000-03	JAL4000-03	JAL4000-04	JAL4000-06	JAL5000-06	JAL5000-10
Rated Flow	95	800	800	1700	1700	5000	5000	6300	7000	7000
Port Size	M5	1/8	1/4	1/4	3/8	3/8	1/2	3/4	3/4	1
Max. Adjustable Pressure	1.0 MPa									
Proof Pressure Resistance	1.5 MPa									
Operating Temperature Range	5 ~ 60 ℃									
Recommended Lubricant	0.05 ~ 0.7 MPa	ISO VG 32								
Container Material	Poly Carbonate									
Container Cup	Not Available			Iron						

CE
ISO9001:2008

JAW Series
1000~5000 Filter & Regulator

Overall Dimension

JAW

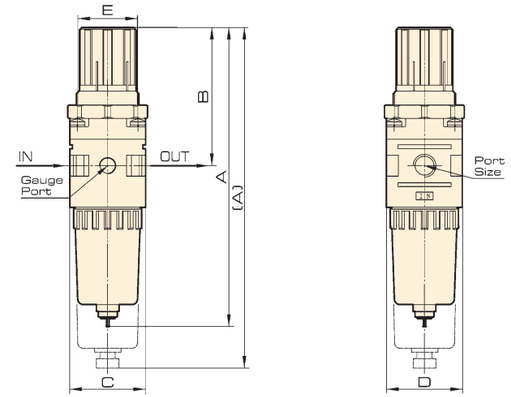

Dimension

Model	Bore	A	B	C	D	E
JAW1000	M5	109.5	50.5	25	28	28
JAW2000	1/8 - 1/4	158 (180)	73	40	40	34
JAW3000	1/4 - 3/8	211	92.5	53	53	40
JAW4000	3/8 - 1/2	262	112	70	70	54
JAW4000-06	3/4	267	114	70	70	54
JAW5000	3/4 - 1	338	116	90	90	54

JAL Series
1000~5000 Lubricator

Overall Dimension

JAL

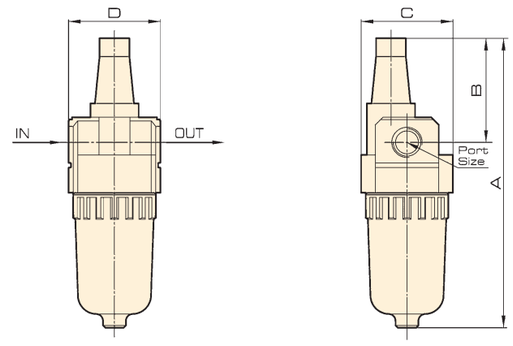

Dimension

Model	Bore	A	B	C	D
JAL1000	M5	81.5	25.5	25	-
JAL2000	1/8 - 1/4	126.5	45.5	40	40
JAL3000	1/4 - 3/8	142	38	53	53
JAL4000	3/8 - 1/2	177	41	70	70
JAL4000-06	3/4	177	39	70	70
JAL5000	3/4 - 1	254	45	90	90

JELPC® | JELPC — China Pneumatic

JC20-02

JC21-02

JW JL JR

Feature

- The strength and light valve body is made of quality aluminum alloy.
- The regulator has balanced structure and is featured with good precision and stability.
- The oil cup is more convenient to be oiled
- The drainage and oil interval is longer depending on the extended type of water cup and oil cup.
- Two combination and three combination share the same bracket and the separated unit including regulator and filter and filter & regulator have their own bracket for easier maintenance.

Ordering Code

J	-	C	-	20	-	02	-		-	N
Series		Function Code		Specification		Port Size		Drain		
J Series		C: 3 or 2 combination R: Regulator F: Filter L: Lubricator W: Filter-regulator combination		21: 2 Combination		02: G 1/4"		Blank: Manual drain		Blank: Standard

Symbol

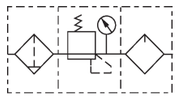

Specification

Model	JC20-02	JC21-02	JW20-02	JR20-02	JF20-02	JL20-02
Rated Flow	500	500	550	550	750	800
Port Size	1/4	1/4	1/4	1/4	1/4	1/4
Filtration	25 μm					
Maximum Working Pressure	1.0 MPa					
Proof Pressure	1.5 MPa					
Operating Temperature Range	5~60 ℃					
Adjustable Pressure Range	0.05~0.85 MPa					
Recommended Lubricant	ISO VG 32		-			ISO VG 32
Bowl Material	Polycarbonate				Polycarbonate	
Cover	Without					
Drain Function	Manual Drain	Manual Drain	Manual Drain	-	Manual Drain	-
Valve Type	Relieving type				-	-
Components	Filter	Filter & Regulator		-	-	-
	Regulator	-	-	-	-	-
	Lubricator	Lubricator	-	-	-	-

CE
ISO9001:2008

JC Series
Air Filter Combination
(3 or 2 Combination)

Overall Dimension

JC20-02

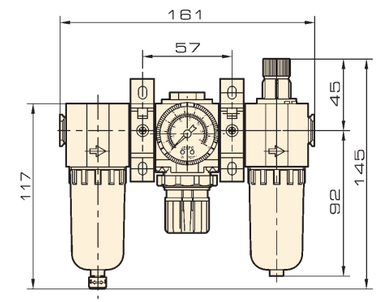

JF20-02

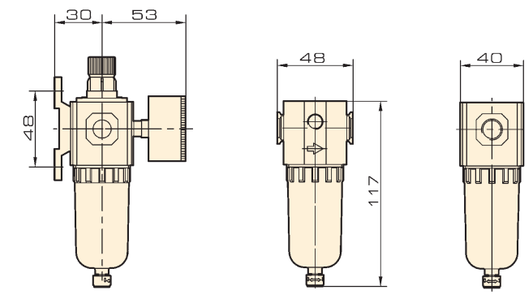

JL20-02

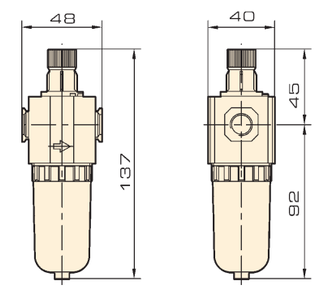

JC21-02

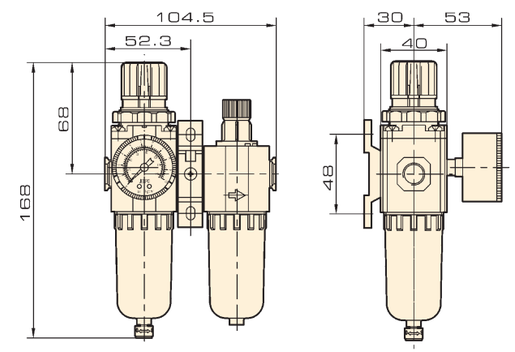

JW20-02

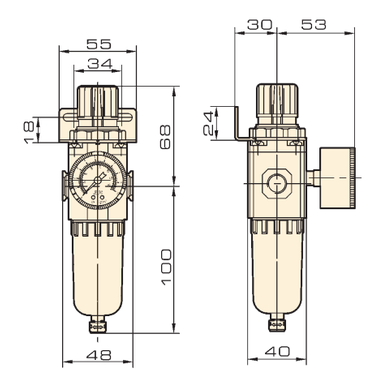

JR20-02

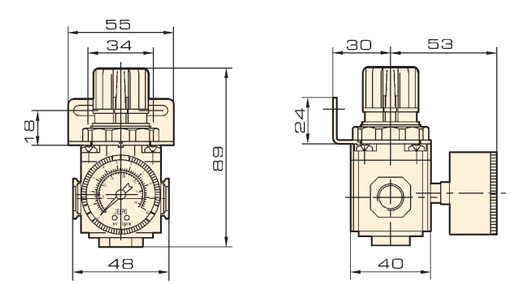

FRL
AC, BC
AFC, BFC
AF, BF
AR, BR
AFR, BFR
AL, BL
JAC
JAF
JAR
JAW
JAL
JC
FE
GC
ZYR10
MAR300LK
PTH
JAD
DPS
HL

JELPC® | JELPC — China Pneumatic

CE
ISO9001:2008

FE Series
Air Filter Combination
(2 Combination)

FRC LFR LR LF LOE

Ordering Code

FRC	-	3/4	-	7	-	5M	-	O	-	MAXI	-	A
Standard		Port Size		Pressure Range		Filter Range		Gauge		Size		Drain Type
FRC: 2 Combination		G1/8		Blank: 0.5 ... 12 bar		Blank: 40 μm		Blank: With Gauge		MINI: Mini		Blank: Hand
LFR: Filter regulator		G1/4		7: 0.5 ... 7 bar		5M: 5 μm		O: Without Gauge		MIDI: Mid		H: Semi Automatic
LR: Regulator		G3/8								MAXI: Max		A: Automatic
LF: Filter		G1/2										
LOE: Lubricator		G3/4										
		G1										

Symbol

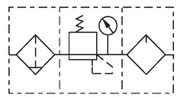

Specification

Specification		Mini			Midi			Maxi	
Port Size		G1/8	G1/4	G3/8	G3/8	G1/2	G3/4	G3/4	G1
Working Medium		Compressed Air							
Structure Features		Filter regulator, with/without gauge							
		proportional Lubricater							
Install Way		By Accessories							
		Tube							
Install Position		Vertical ±5°							
Regulator Lock		Rotary handle, with lock							
		Rotary handle, with itergrated locks							
Filter Class	[μm]	5 or 40							
Max Hysteresis	[bar]	0.2						0.4	
Preessure Range	[bar]	0.5 ... 7							
		0.5 ... 12							
Preessure Display		By Gauge							
		G1/8 Preset			G1/4 Preset			G1/4 Preset	
Water Capacity	[cm³]	22			43			80	
Input Pressure	[bar]								
Water Exhaust	Hand	1 ... 16							
	Semi Automatic	1.5 ... 16							
	Automatic	2 ... 12							

Overall Dimension

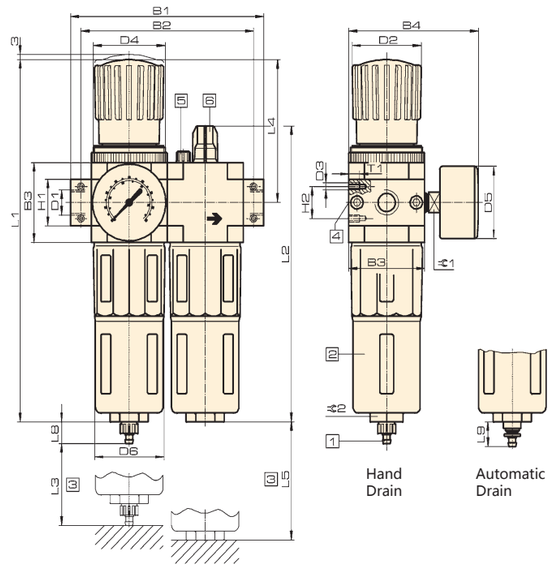

1 Barb connector for plastic tube PCN4
2 Metal cover
3 Install dimension
4 Second gauge port
5 Screws with hole for lubricator
6 Oil regulator scerw
→ Air flow

Dimension

Model	B1	B2	B3	B4	D1	ΦD2	D3	D4	ΦD5	ΦD6
Mini										
FRC-1/8-MINI	104	92	40	76	G1/8	31	M4	M36x1.5	41	38
FRC-1/4-MINI					G1/4					
FRC-3/8-MINI	110				G3/8					
Midi										
FRC-3/8-MIDI	140	125	55	95	G3/8	50	M5	M52x1.5	50	52
FRC-1/2-MIDI					G1/2					
FRC-3/4-MIDI					G3/4					
Maxi										
FRC-3/4-MAXI	162	146	66	107	G3/4	31	M5	M36x1.5	50	65
FRC-1-MAXI	182	157			G1					

Model	H1	H2	L1	L2	L3	L4	L5	L8	L9	T1	⌀1	⌀2
Mini												
FRC-1/8-MINI	20	11	193	169	60	69	100	15	19	7	14	22
FRC-1/4-MINI												
FRC-3/8-MINI												
Midi												
FRC-3/8-MIDI	32	22	250	204	80	99	120	15	19	8	14	24
FRC-1/2-MIDI												
FRC-3/4-MIDI												
Maxi												
FRC-3/4-MAXI	32	22	252	228	90	82	150	15	19	8	14	24
FRC-1-MAXI	40											

JELPC® | JELPC — China Pneumatic

Overall Dimension

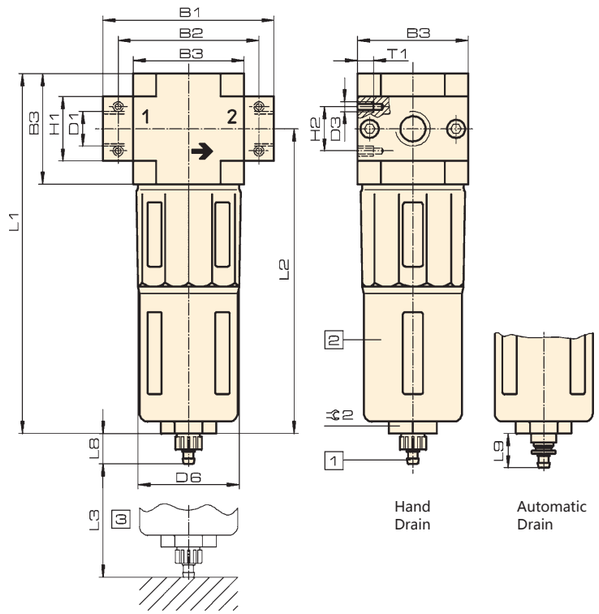

1 Barb connector for plastic tube PCN-4 | 2 Metal cover | 3 Install dimension | → Air flow

Dimension

Model	B1	B2	B3	D1	D3	ΦD6	H1	H2	L1	L2	L3	L8	L9	T1	T2	⬡2
Mini																
LF-1/8-MINI	64	52	40	G1/8	M4	38	20	11	144	124	60	15	19	7	-	22
LF-1/4-MINI				G1/4												
LF-3/8-MINI	70			G3/8												
Midi																
LF-3/8-MIDI	85	70	55	G3/8	M5	52	32	22	179	151	80	15	19	8	-	24
LF-1/2-MIDI				G1/2												
LF-3/4-MIDI				G3/4												
Maxi																
LF-3/4-MAXI	96	80	66	G3/4	M5	65	32	22	203	170	90	15	19	8	-	24
LF-1-MAXI	116	91		G1			40									

CE
ISO9001:2008

FE Series
Air Filter Combination
(2 Combination)

Overall Dimension

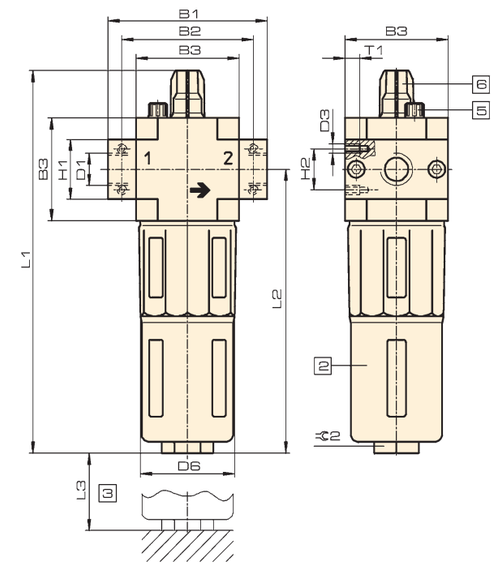

2 Metal cover | 5 Screws with hole, for lubricator
3 Install dimension | 6 Oil regulator Screw | → Air flow

Dimension

Model	B1	B2	B3	B4	B5	D1	ΦD2	D3	ΦD6	H1	H2	L1	L2	L3	T1	T2	⬡2
Mini																	
LOE-1/8-MINI	64	52	40	30	-	G1/8	-	M4	38	20	11	169	124	100	7	-	22
LOE-1/4-MINI						G1/4											
LOE-3/8-MINI	70					G3/8											
Midi																	
LOE-3/8-MIDI	85	70	55	43	-	G3/8	-	M5	52	32	22	204	151	120	8	-	24
LOE-1/2-MIDI						G1/2											
LOE-3/4-MIDI						G3/4											
Maxi																	
LOE-3/4-MAXI	96	80	66	46	-	G3/4	-	M5	65	32	22	228	170	150	8	-	24
LOE-1-MAXI	116	91				G1				40							

JELPC® | JELPC — China Pneumatic

GC

GFC

GFR

GR

Ordering Code

GC	-	200	-	08	-	M	-	F	-	1	-	W	-	G
Code		Series		Port Size		Drain		Pressure Gauge		Scale		Filter Accuracy		Thread
GC: 3 Combination		200 Series		06 : PT 1/8		Blank: Semi-auto drain		F: Square type		1: MPa		Blank: 40 μ		Blank: PT
GFC: 2 Combination		300 Series		08 : PT 1/4		M: Manual drain		C: Traditional type		2: Psi		W: 5 μ		G: PS
GFR: Filter-regulator combination		400 Series		10 : PT 3/8		A: Auto drain								T: NPT
GF: Filter				15 : PT 1/2										
GR: Regulator														
GL: Lubricator														

*Note: No Auto Drain type is available on GC 200 Series.
**Note: Max. adjustable pressure is at 0.4 MPa on Low pressure type.

Symbol

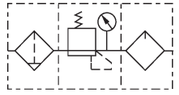

Specification

Model		GC200-06	GC200-08	GC300-08	GC300-10	GC300-15	GC400-10	GC400-15
Working medium		Air						
Port Size		PT 1/8	PT 1/4	PT 1/4	PT 3/8	PT 1/2	PT 3/8	PT 1/2
Filtration		40 μ or 5 μ						
Adjustable pressure range		0.15 ~ 0.9 MPa						
Maximum working pressure		1.0 MPa						
Proof Pressure		1.5 MPa						
Operating Temperature Range		5 ~ 60 ℃						
Capacity of Filter Cup		10 CC		40 CC			80 CC	
Capacity of Oil Cup		25 CC		75 CC			160 CC	
Recommended Lubrication		ISO VG 32 or Same Grade						
Weight		580 g		1300 g			2358 g	
Components	Filter	GF 200-06	GF 200-08	GF 300-08	GF 300-10	GF 300-15	GF 400-10	GF 400-15
	Regulator	GR 200-06	GR 200-08	GR 300-08	GR 300-10	GR 300-15	GR 400-10	GR 400-15
	Lubricator	GL 200-06	GL 200-08	GL 300-08	GL 300-10	GL 300-15	GL 400-10	GL 400-15

CE
ISO9001:2008

GC Series
Air Source Treatment
(3 or 2 Combination)

Overall Dimension

GC 200

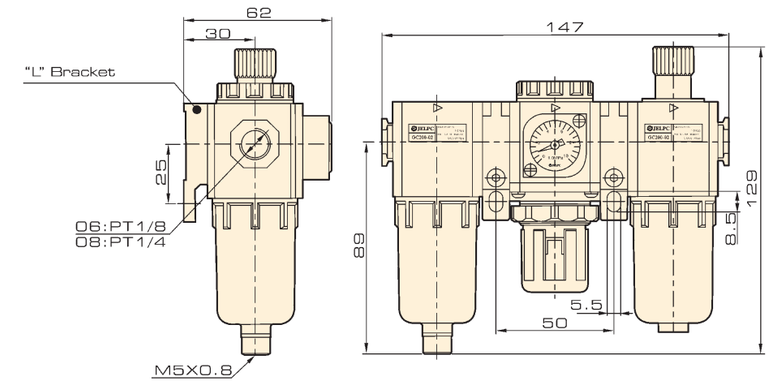

GC 300
GC 400

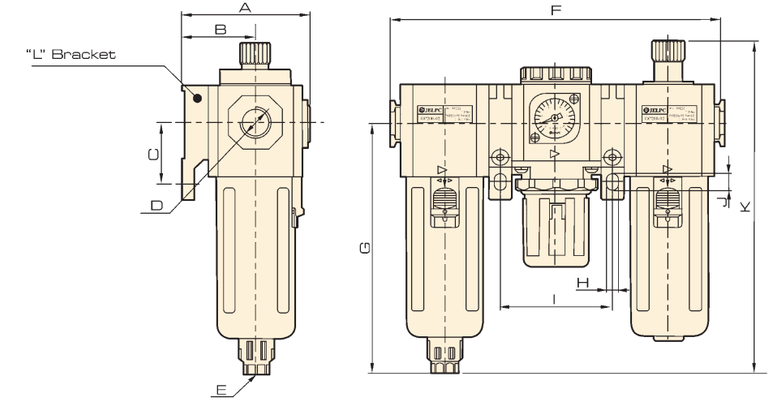

Dimension

Model / Symbol	A	B	C	D	E	F	G	H	I	J	K
GC300-08	71	41.5	35	PT 1/4	PS 1/8	188	143	6.5	64	9	188
GC300-10	71	41.5	35	PT 3/8	PS 1/8	188	143	6.5	64	9	188
GC300-15	71	41.5	35	PT 1/2	PS 1/8	188	143	6.5	64	9	188
GC400-10	85.5	50	40	PT 3/8	PS 1/4	248	166.5	8.6	84	12	216
GC400-15	85.5	50	40	PT 1/2	PS 1/4	248	166.8	8.6	84	12	216

FRL
AC, BC
AFC, BFC
AF, BF
AR, BR
AFR, BFR
AL, BL
JAC
JAF
JAR
JAW
JAL
JC
FE
GC
ZYR10
MAR300LK
PTH
JAD
DPS
HL

ZYR10 Series
Oxygen Supply Regulator

JELPC — China Pneumatic

Ordering Code

ZYR10	-	G1/8"
Model		Port Size
ZYR10		G1/8"
		G1/4"

Symbol

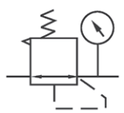

Specification

Model	ZYR10
Orifice	4 mm
Working Medium	Compressed Air
Working Pressure Range	0-0.08 Mpa
Medium Temperature	5 ~ 60 ℃
Ambient Temperature	5 ~ 60 ℃
Port Size	G 1/8" G 1/4"

Overall Dimension

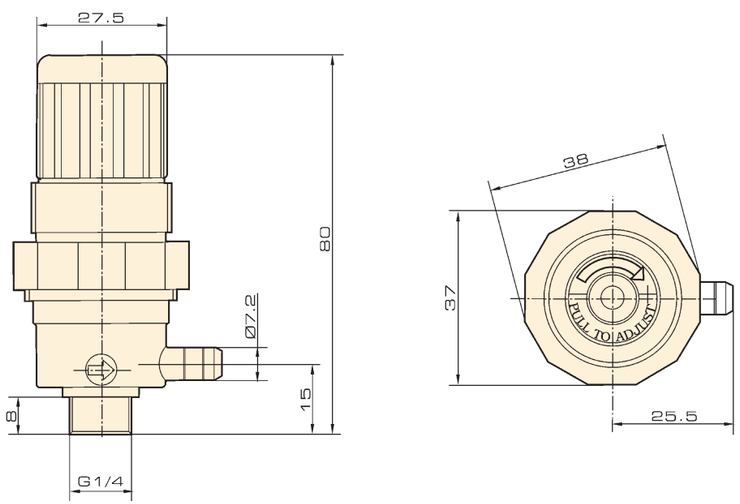

CE
ISO9001:2008

MAR300LK Series
Handle Regulator

Features

Handle regulator can be fixed with pneumatic tool directly . It can regulate pressure according to application in order to control the outlet of pneumatic tools.

1, Light and smart

Easy to bring without knob and aluminum alloy body (about 80g).

2, Works without gauge

The outlet pressure can be marked by the scale of the twisting button and with lock, to avoid any unexpected twisting.

3, Pressure could be regulated easily and speedly

With special structure of twisting button to regulate easily and speedly within one circle.

4 Outlet pressure could be exhausted

As a complete regulator including exhausting system, outlet pressure can be exhausted by revolution

▲ Max.pressure is 1.5MPa
▲ Two standard for inlet port

Ordering Code

MAR300LK	-	8A
Series		Tube Port
		8A : PT1/4

Symbol

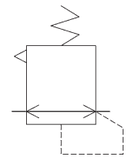

Specification

Model	MAR300LK	Model	MAR300LK
Tube Port	8A	Proof Pressure	37.5Kgf/cm^2 (3.75Mpa)
Tube Port Size	PT1/4	Fixed Pressure Range	3~9Kgf/cm^2 (0.3~0.9Mpa)
Operation Fluid	Air	Abient temperature	0~+60℃ (No freeze)
Operating Pressure Range	0~10Kgf/cm^2 (0~1.0MPa)	Weight	80g

JELPC — China Pneumatic

Pressure Regulating Method

- Within 1.0MPa : Common Factory
- Within 1.5MPa : Auto repair Factory

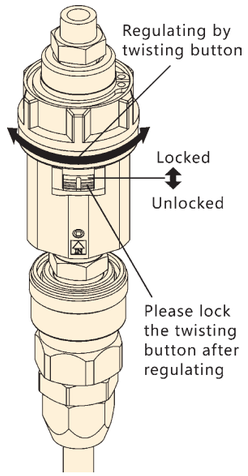

Parts

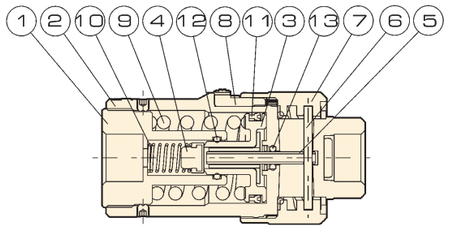

Item	Name	Material	Item	Name	Material
1	Body #1	Aluminium	8	Twisting button	Plastic
2	Body #2	Aluminium	9	Adjust spring	Steel Slander
3	Pistion	Plastic	10	Air valve spring	Stainless steel
4	Air valve	NBR/Brass alloy	11	Pistion seal ring	NBR
5	Adjust Rod	Brass alloy	12	O ring	NBR
6	Parallel Pin	45# steel	13	O ring	NBR
7	Twisting button	Plastic			

Overall Dimension

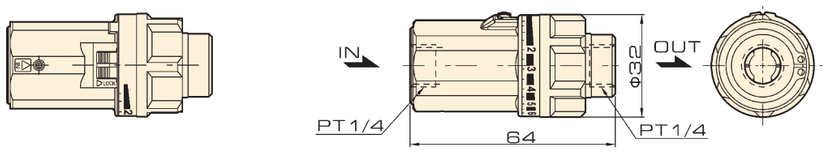

CE
ISO9001:2008

PTH Series
Air Filter Combination

R07 B07 L07 PTH

Ordering Code

PTH	-	200
Series		Port Size
R07 series pipe type regulator		100: 1/8"
B07 Series Pipe type filter-regulator		200: 1/4"
L07 micro type lubrcator		
P1H/ PTH series filter, regulator and lubricator		

Symbol

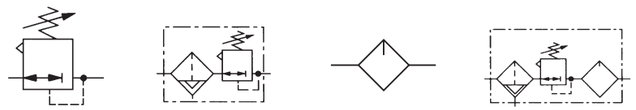

R07 B07 L07 P1H/ PTH

Specification

Model	R07	B07	L07	P1H/PTH
Operating Fluid	Air			
Inlet pressure	0~10 bar	0~10 bar (Transparent cup)	Transparent cup: 6.3 bar	0~10 bar
Pressure gauge port	Rc 1/8			
Ambient temperature	-20~50 ℃	Transparent cup: -20~50 ℃	-	-
Body material	Aluminium alloy			

R07 Dimension

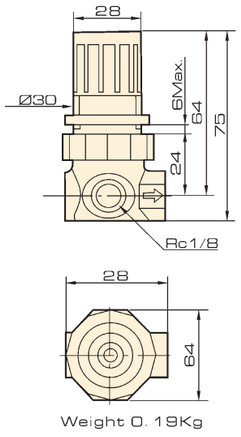

Weight 0.19Kg

Installation bracket

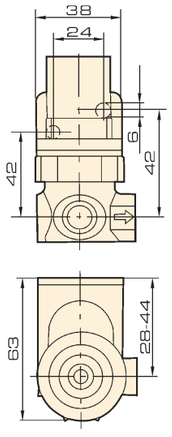

Flow characteristic

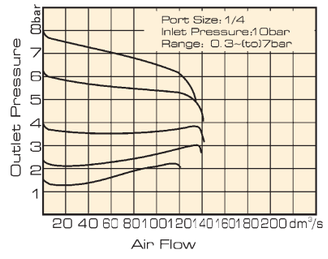

PTH Series
Air Filter Combination

JELPC® | JELPC — China Pneumatic

B07 Dimension

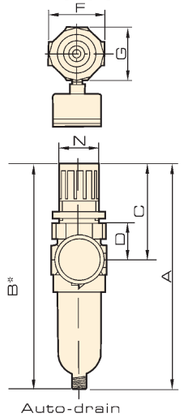

Installation bracket

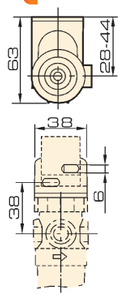

Flow charateristic

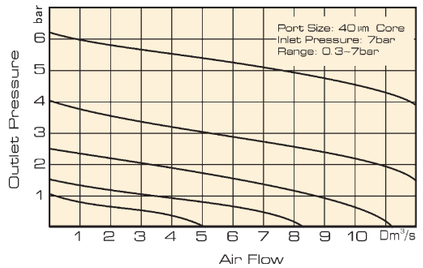

* Minimum clearance required to remove bowl
*1/8 BSP exhausting connector

Connector	Automatic	A	B	C	D	F	G	Panel Hole	Panel Thickness	Kg
G1/8, G1/4	Without	160	210	68	28	41	38	30	0~6	0.26
G1/8, G1/4	Manual	164	214	68	28	41	38	30	0~6	0.26

Overall Dimension
L07

* Minimum clearance required to remove bowl

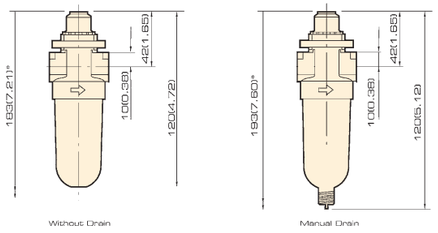

Flow charateristic

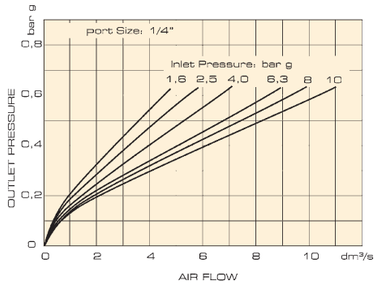

Overall Dimension
P1H

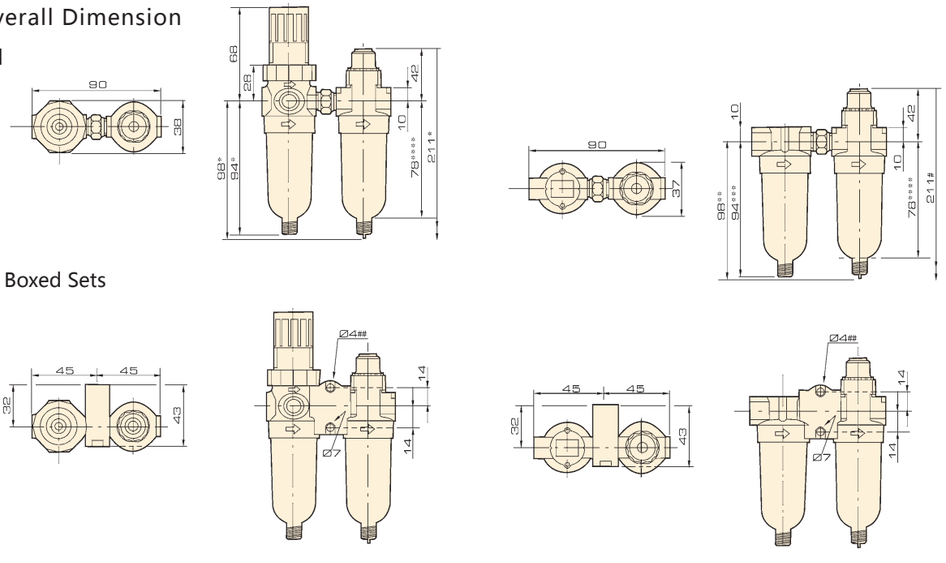

PTH Boxed Sets

CE
ISO9001:2008

JAD Series
Auto-drain

Ordering Code

JAD	-	402	-	02
Specification		Series		Inlet port size
JAD: Auto-drain		402 Series		02: G1/4
				03: G3/8
				04: G1/2

Symbol

Specification

Model	JAD402-02	JAD402-03	JAD402-04
Working Medium		Air	
Inlet Port Size	G1/4	G3/8	G1/2
Outlet Port Size	G1/4	G1/4	G3/8
Proof Pressure		1.5 MPa	
Max. Test Pressure		1.0 MPa	
Ambient Temperature Range		5~60 ℃	

Overall Dimension

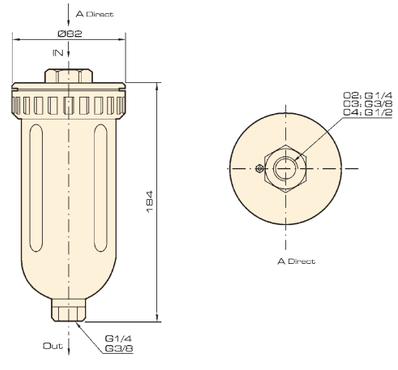

DPS Series
Digital Pressure Sensor

JELPC — China Pneumatic

Ordering Code

DPS	-	3	10	R	N	-	□
		Series Code	Measurement Range	Pressure Port Size	Sensor Type		Optional 1
		DPS-3 : 3 Series Digital Pressure Sensor	10 : -100~1000kPa 01 : -100~100kPa	R : R1/8 (Female thread M5) N : NPT1/8 (Female thread M5) G : G1/8 (Female thread M5)	N : Simplex NPT output (*1) P : Simplex PNP output X : NPT+PNP output *Note: Products with Simplex design, NPN or PNP output is available, black wire is NPT, white wire is PNP.		M : Selection panel N : Selection panel +dust cover Z : Selection L bracket S : Selection S bracket

Specification

Model		DPS-301 (Mixed pressure)	DPS-310 (Positive pressure)
Pressure Measurement	Measuring Range	-100~100kPa	-0.100~1.000MPa
	Predetermined Range	-100~100kPa	0.000~1.000MPa
	Max Pressure	500kPa	1.500MPa
	Pressure Form	Non-flammable, Non-corrosive gas, Gauge pressure measurement	
	Measurement Precision	≤ ±2%F. S. (Environment temperature 25℃)	
	Temperature Error	≤ ±3%F. S. (Temperature range 0~50℃)	
	Measurement Mode	Single point mode	
		Hysteresis mode	
		Window mode	
Pressure Port Size		Male thread R1/8, NPT1/8, G1/8, Female thread M5	
Pressure Display	Basic Description	LCD display, 4-digit measurement quantity, unit display, output status display	
	Display Mode	Adjustable backlight, total 4 display modes	
Input Power	Voltage Range	12~24VDC±10%	
	Power Consumption	40mA Max (no load)	
Output Signal	Transistor Output	NPN open collector output Output Electric current : 80mA Max Internal pressure drop : ≤ 1V	PNP open collector output Output Electric current : 80mA Max Internal pressure drop : ≤ 1V
	Response Time	Adjustable : 2.5ms, 20ms, 100ms, 500ms, 1000ms, 2000ms	
	Short circuit Protection	Yes	
Environmental Resistance	IP Grade	IP40	
	Environment Temperature	Use environment temperature : 0~50℃ , Keep environment temperature : -20~60℃	
	Environment Humidity	Use environment humidity : 35~80%RH	
	Insulation Voltage	1000VAC 1 minute	
	Insulation Resistance	≥ 50MΩ (500VDC)	
	Shock Proof	Max 100m/s^2 , 3 axis & 6 directions/3times	
	Resistant to Vibration	Amplitude 1.5mm , 10HZ~500HZ , 3axis/2h	

CE
ISO9001:2008

HL Series
Compressed Air Filter

Features

Untreated atmosphere contains moisture, dust and other substances, containing 140 million solid particles per cubic meter of air. The compressed air is enter into oil particles during compression and pressure increase. The compressed air contains not only dust, water, but also oil particles and other substances .If these filths are not removed, they will inevitably be polluted and corrosion pipelines, valves, instruments, equipment. Reduce its life-time, increase production costs, and product quality can not be guaranteed.

Compressed air is the main safe energy source for large-scale industrial production. HL series compressed air filters ensure the quality of water, solid particles, oil, bacteria and other impurities to be removed in the compressed air. Once you use it, there is no other choice.

HL series compressed air filter adopts Europe's leading technology, equipped with differential pressure indicator and automatic sewage valve; small oil volume, large flow, high filtration efficiency, large dust holding capacity; Small compression loss, good anti-corrosion performance, long life-time, easy replacement of filter elements and other unique advantages. All levels of filters were passd the inspection of the high-efficiency filter exhaust oil content tester conforming to the ISO8573 standard. The difference is in the slightest and there is a huge difference between the gains.

1 Control Element

2 Air SourceTreatment Unit

3

JELPC®

EXECUTION ELEMENT

4 Pneumatic Accessory

EXECUTION ELEMENT CONTENTS

3-01 Golden Rules Sizing and Valculations in Pneumatics

3-02 SI Series Standard Cylinder (Conforms to ISO15552 Standard)

3-05 SI Series Standard Cylinder Accessory (Conforms to ISO15552 Standard)

3-07 SIB Series Double Acting Booster Cylinder

3-09 Super Economical Type SQ Series Standard Cylinder (Conforms to ISO15552 Standard)

3-13 DNT Series Economical Cylinder (Conforms to ISO15552 Standard)

3-14 SC / SU Series Standard Cylinder

3-17 SCT Series Muti-position Cylinder

3-18 SC / SU Series Standard Cylinder Accessory

3-22 SL Series Lock Type Cylinder

3-23 DN Series Stainless Steel Mini Cylinder (ISO6432 Standard)

3-29 DSN Series Stainless Steel Mini Cylinder (ISO6432 Standard)

3-33 DN/DSN Series Stainless Steel Mini Cylinder Accessory

3-35 MA Series Stainless Steel Mini Cylinder

3-40 MAC Series Stainless Steel Mini Cylinder

3-44 MA/MAC Series Stainless Steel Mini Cylinder Accessory

3-46 MAL Series Aluminum Alloy Mini Cylinder

3-51 MALC Series Aluminum Alloy Mini Cylinder

3-55 MAL/MALC Series Stainless Steel Mini Cylinder Accessory

3-57 SDA Series Compact Cylinder

3-65 CQ2 Series Thin Type Cylinder

3-83 TCQ2 Series Guide Cylinder

3-86 ADN Series New Compact Cylinder (Conforms to ISO21287 Standard)

3-91 TADN Series Guide Cylinder

3-94 PPRM Series Elbow Cylinder

3-98 ZX Series Rodless Cylinder

3-102 ZX Series Rodless Cylinder Mounting Parts

3-104 MHL2 Series Wide Type Gripper (Parallel opening and closing type)

3-105 Performing End of The Robot (Pneumatic Fingers)

3-107 MXH Series Small Pneumatic Slide (Liner Guide)

3-108 MXQ Series Pneumatic Slide

3-109 CJP Series Pin Cylinder (Single Acting)

3-110 CJ2 Series (Ø6 ~ Ø16) Stainless Steel Mini Cylinder Double Acting

3-113 C D U Series Free Installation Cylinder (Ø6 ~ Ø32)

3-116 TN Series Double Rod Cylinder

3-120 CXS Series (Ø6 ~ Ø32) Twin Rod Cylinder/Basic Type

3-122 MGP New Compact Tri-rod Cylinder (Ø20 ~ Ø100)

3-127 MSQ Series Rotational Platform (Gear Type)

How to use Actuator component

Caution for Design, Selection

Warning

1. When designing pneumatic system devices, one must be with the requests and attentions of Pneumatic components and pneumatic system. Use and operate system devices under the situation that necessary examinations have been conducted and the machinery framework, pneumatic control loop and the electrical control system of pneumatic system are ensured to be in safe condition.
2. The air used is compressed air, please note that expandable and unstable pressure will fly out, burst out, or leak.
3. Due to the mechanical design with the variation of wobbling movement of the cylinder, please pay attention of flying objects and possible crash hazard of your limbs, resulting in body injury and, mechanical damage and so on, so take precaution upon designing.
4. The movable range of cylinder may contact our body and cause injury, should be protected by safety guard to prevent direct contact of body hazard.
5. For larger mechanism or long stroke object, the selected cylinder must equip with buffer device and provide with deceleration circuit to reduce and sooth the rigid impact of the mechanism device.
6. Take the emergency or transient cut off power source, or power failure, air source circuit pressure drop causing holding force drop, vertical movement slip and resulting in damage of mechanical device and human safety into account upon designing, so safety countermeasure should be taken in design.
7. Take the driving mechanism and circuit control system combination into account upon design to avoid residue pressure in circuit. Failure to completely positioning and lateral pressurized and other factors may cause high speed fly out of the object. These situations are very possible to cause body injury, limbs crashed, and damage of mechanism, countermeasure of protective circuit is necessary.
8. Emergency stop device for mechanism is essential. In case of malfunction, in addition to protective device, emergency stop device should be provided in order to prevent body injury and damage of equipment.
9. Re-start after emergency stop should be confirm safety position of all mechanism, avoid interference and impact due to error position, after human body and damage the equipment, there should have safety precaution countermeasure for restarting after emergency stop upon design.
10. While applying three positions intermediate stop control in cylinder, take the expansion property of air and low hydraulic operation, the precise intermediate position difficulty into account. For long period stop position, consider the displacement cause by air leak, Please contact the sale unit of us in case of special application.
11. Requests of peripheral environment
    (1) Avoid to be used in environment with chemical, inflammable, corrosive and sea water, high temperature
    (2) Avoid to be used in the place with heating and irradiative heat
    (3) Follow the requirement stated in the specification for ambient temperature
    (4) Avoid the environment in outdoor with sun and dusty place, which cause unstable in quality
    (5) Avoid to be used in oily, inflammable and explosion place

Caution

1. Prevent debris and dust from entering the cylinder while laying, which may cause failure and poor movement.
2. The use of cylinder should follow the principle of not exceeding max stroke, prevent the momentum force impact the front and rear cap of the piston.
3. The in/outlet the cylinder should be equipped with governor for controlling the traveling speed of the cylinder. It is preferable to control the cylinder by check out.
4. The cylinder with long stroke should design with intermediate support. Arbor and cylinder tube, if support on one side will cause static load deflection, in case of shock and loaded may tend to damage.
5. Plural cylinder device simultaneous moving structure, should be designed with guide rod to prevent interference and poor action.
6. The axis of the cylinder should be move consistence with load. No lateral load o sallower and will cause surface worn and damage of the arbor, and make the shaft seal packing damage resulting in leakage and poor action.
7. At the portion of external guide rod or shaft end connection object, the shaft end connection must avoid connection interference, it is preferable to connect to floating coupling or angular adjustable device, prevent damage cause by imbalance action and single side rubbing.
8. The inner wall of cylinder and arbor are precise machine, avoid scratch and knock to this portion, especially damage of the outer of the cylinder tube will lead to deformation of tube will lead to deformation of tube wall; this is cause of malfunction and damage of cylinder.
9. The cylinder is equipped with adjustment of buffer device, it should be adjusted according to the actual moving speed and max load condition, the adjustment of the needle valve of the buffer device should not be in full closed, this will cause the damage of buffer packing.
10. Prevent debris and leak proof tape residue from entering the pipe while pipe laying and assembling, the connector. Reserve 1-1.5 thread not wound with tape while winding the tape.
11. If the connector is locked by using anoxic glue, avoid excessive amount and fluid glue from flowing in the body, which may cause jammed and poor movement.
12. Caution for installation and application of sensor
    (1) Confirm the specification and voltage value before usage
    (2) The fixation of tie band shouldn't be tilted and skew angled
    (3) When the sensor is connected to load with length of wire exceed 10m. equip one extra induction sensor
    (4) Nearby the sensor in order to prevent pulse and prevent contact fail to release
    (5) Please don't exceed the specified voltage and current
    (6) If the lead wire of the solenoid switch is pulled by force, twisted, wobbled or put heavy object on top. Serious condition will cause short and damage of mechanism
    (7) Please be careful and check all parts for securing before operation

How to use Actuator component

Installation and use

1

The axes of piston rod shall accord with the moving direction of load (coaxial). Piston rod and cylinder will produce opposite force which can easily damage the internal surface of the cylinder, guide sleeve, the surface of piston rod and seals.

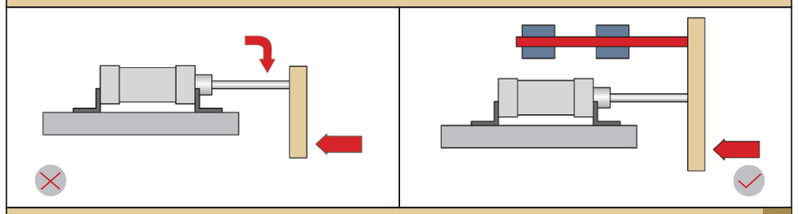

2

Avoid direct connection of piston rod and vertical gravity, add idler wheel to support the rail. Piston rod and cylinder ill produce opposite force which can easily bend piston rod and damage the internal surface of the cylinder, guide sleeve, the surface of piston rod and seals.

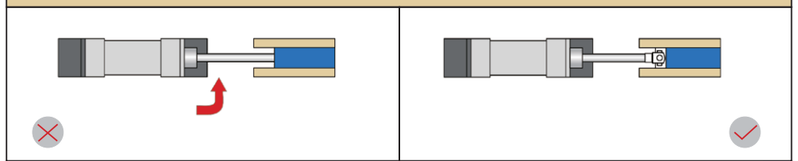

3

If back activity hinge is far from force supply point, piston rod will be influenced by torque force. To prevent that, middle action support shall be used to shorten the distance between support point and force supply point.

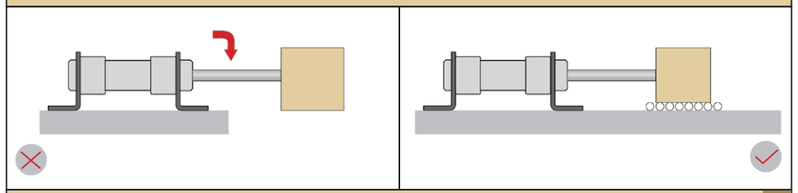

4

To prevent that back activity hinge is far from force supply point, thus the piston rod will be influenced by torque force and change to use middle action support to shorten the long distance between support point and force supply point.

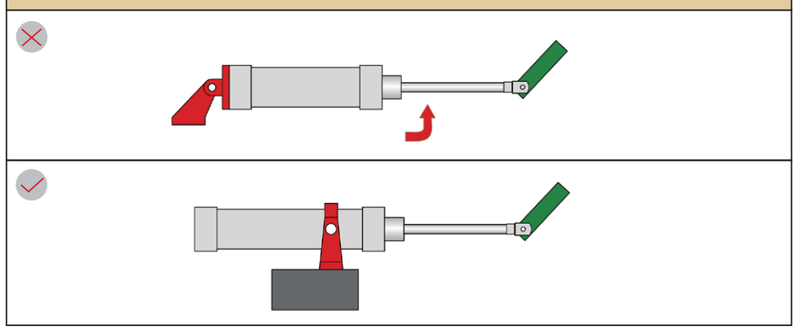

How to use Actuator component

Installation and use

5

Long-stroke cylinder shall set middle guide support to prevent natural drop of piston rod and to prevent the damage on piston rod caused by the drop of piston, bend of the cylinder, vibration and external load.

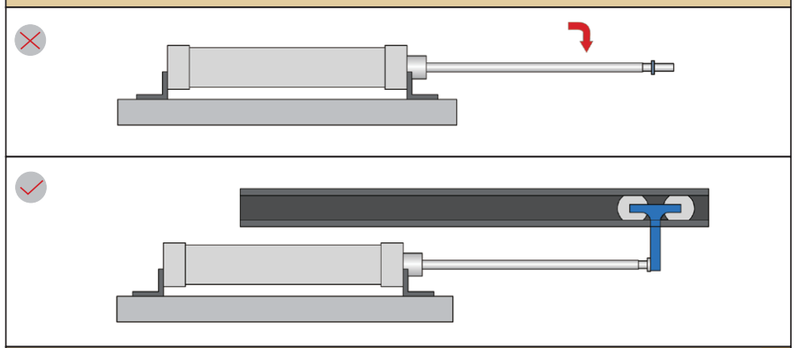

6

It tends to bend in long stroke, thus the installation bracket shall be move to the front cover.

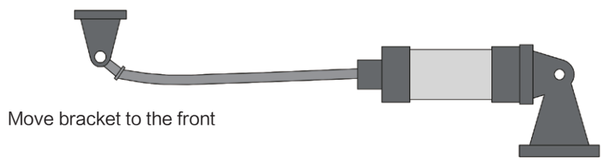

7

The fixed cylinder shall not be connected with the rocker carrying out circular action (LB fixation). At this time, it shall be connected with swing cylinder(CA/CN/TC fixation).

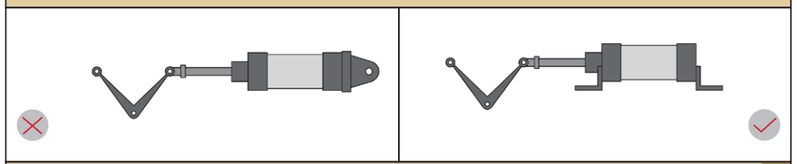

8

If the height (H) between installation surface of bearing bracket and the position of bearing is too great, when cylinder works, the installation part of the support will produce great torque force, which may cause damage to installing bolt and other parts.

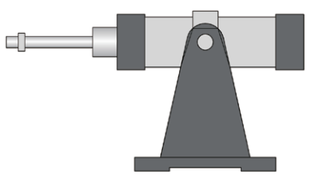

JELPC®

How to use Actuator component

Maintenance and service

Warning

1. Shut off the power switch and air source properly before service and maintenance, confirm that there is no residue pressure in the pipeline and start work after confirming the status is safe.
2. The cylinder is coated with small amount of oil at initial using state; it will decrease after a period of usage, and should be added up with appropriate amount of oil according to actual application condition, lubricant is essential in high speed moving. Limit to use ISO-VG32 lubricant, feed by oil applicator, may cause poor action if stop oiled when it is required.
3. While removing the cylinder shaft end , it shall work at position with piston pushing in the cylinder (don't pull the cylinder shaft out to serve installing and removing turning), and apply the force evenly to tighten in balance, and push by hand to confirm there is no interference and then start to supply air.
4. Service and maintenance should be perform regularly as schedule, and confirm the normal operation of following:
   (1) Is the compressed air supplied stably?
   (2) Is the front filter and strainer normal?
   (3) Is the connection portion or piping loosen accompany moving of object? Is the pipe connection portion normal?
   (4) Is the action condition of the cylinder normally? Is there any delay phenomena and exhaust normal? Any strange noise?
   (5) Whether the piping system connected to solenoid valve (governor) normal? Terminal start and stop movement normal? Is the load system normal?
   (6) Is the lubricant feeding normal? Is the oil amount adjusted properly?

Cylinder
Sizing
SI
SI A.
SIB
SQ
DNT
SC / SU
SCT
SC A.
SL
DN
DSN
DN/DSN A.
MA
MAC
MA/MAC A.
MAL
MALC
MAL/MACL A.
SDA
CQ2
TCQ2
ADN
TADN
PPRM
ZX
MHL2
Pneumatic Fingers
MXH
MXQ
CJP
CJ2
CDU
TN
CXS
MGP
MSQ

Calculations for Air consumption

$$QA = (A1+A2) \times L \times \frac{P+1.033}{1.033} \times 10^{-3}$$

$$QB = 2 \times A3 \times LH \times \frac{P}{1.033} \times 10^{-3}$$

$$Qn = (QA + QB) \times n$$

Qn : Air consumption of Cylinder actuating/ each time (L/min)
QA : Air volume for cylinder actuating to and back/ each time (L/min)
QB : Air Consumption Valume of Accessaries (Valve the Cylinder) (L/min)
A1 : Push Side Pressured Area (cm2)
A2 : Pull Side Pressured Area (cm2)
A3 : ID of Connecting tube (cm2)
L : Stroke of cylinder (cm)
LH : Length of tube(cm)
P : Operating Pressure (kgf/cm2)
n : Operating Frequency

Cylinder Theory Output Sheet

Cylinder Inside Diameter		32		40		50		63		80		100		125		160		200	
External Diameter Piston Rod		12		16		20		20		25		25		32		40		40	
Operation		Double Acting		Double Acting		Double Acting		Double Acting		Double Acting		Double Acting		Double Acting		Double Acting		Double Acting	
		Extrusion Side	Pull Side	Extrusion Side	Pull Side	Extrusion Side	Pull Side	Extrusion Side	Pull Side	Extrusion Side	Pull Side	Extrusion Side	Pull Side	Extrusion Side	Pull Side	Extrusion Side	Pull Side	Extrusion Side	Pull Side
Compression Area (cm^2)		8.04	6.90	12.56	10.55	19.63	16.49	31.17	28.03	50.26	45.36	78.53	73.62	122.70	114.60	201.00	188.40	314.20	301.40
Air Pressure (Kgf/cm^2)	1	8.04	6.90	12.56	10.55	19.63	16.49	31.17	28.03	50.26	45.36	78.53	73.62	122.70	114.60	201.00	188.40	314.20	301.40
	2	16.08	13.80	25.12	21.10	39.26	32.98	62.34	56.06	100.52	90.72	157.06	147.24	245.40	229.20	402.00	376.80	628.40	602.80
	3	24.12	20.70	37.68	31.65	58.89	49.47	93.51	84.09	150.78	136.08	235.59	220.86	368.10	343.80	603.00	565.20	942.60	904.20
	4	32.16	27.60	50.24	42.20	78.52	65.96	124.68	112.12	201.04	181.44	314.12	294.48	490.80	458.40	804.00	753.60	1256.80	1205.60
	5	40.20	34.50	62.80	52.75	98.15	82.45	155.85	140.15	251.30	226.80	392.65	368.10	613.50	573.00	1005.00	942.00	1571.00	1507.00
	6	48.24	41.40	75.36	63.30	117.78	98.94	187.02	168.18	301.56	272.16	471.18	441.72	736.20	687.60	1206.00	1130.40	1885.20	1808.40
	7	56.28	48.30	87.92	73.85	137.41	115.43	218.19	196.21	351.82	317.52	549.71	515.34	858.90	802.20	1407.00	1318.80	2199.40	2109.80
	8	64.32	55.20	100.48	84.40	157.04	131.92	249.36	224.24	402.08	362.88	628.24	588.96	981.60	916.80	1608.00	1507.20	2513.60	2411.20
	9	72.36	62.10	113.04	94.95	176.67	148.41	280.53	252.27	452.34	408.24	706.77	662.58	1104.30	1031.40	1809.00	1695.60	2827.80	2712.60

Pressure Factors Convertibel Table

Unit	Pa	KPa	MPa	bar	mbar	kgf/cm^2	cmH_2O	mmH_2O	mmHg	p.s.i
Pa	1	10^{-3}	10^{-6}	10^{-5}	10^{-2}	10.2×10^{-6}	1.02×10^{-3}	101.97×10^{-3}	7.5×10^{-3}	0.15×10^{-3}
KPa	10^{3}	1	10^{-3}	10^{-2}	10	10.2×10^{-3}	10.2	101.97	7.5	0.15
MPa	10^{6}	10^{3}	1	10	10^{4}	10.2	1.02×10^{3}	101.97×10^{3}	7.5×10^{3}	0.15×10^{3}
bar	10^{5}	10^{2}	10^{-1}	1	10^{3}	1.02	1.02×10^{3}	102×10^{3}	750.06	14.5
mbar	10^{2}	10^{-1}	10^{-4}	10	1	1.02×10^{-3}	1.02	10.2	0.75	14.5×10^{-3}
kgf/cm^2	98066.5	98.07	98.07×10^{-3}	0.98	980.67	1	1000	10,000	735.56	14.22
cmH_2O	98.06	98.07×10^{-3}	98.07×10^{-6}	0.98×10^{-3}	0.98	10^{-3}	1	10	0.74	14.22×10^{3}
mmH_2O	9.806	9.807×10^{-3}	9.807×10^{-6}	98.07×10^{-6}	98.07×10^{-3}	10^{-4}	0.1	1	73.56×10^{-3}	1.42×10^{-3}
mmHg	133.32	133.32×10^{-3}	133.32×10^{-6}	1.33×10^{-3}	1.33	1.36×10^{-3}	1.36	13.6	1	19.34×10^{-3}
p.s.i	6894.76	6.89	6.89×10^{-3}	68.95×10^{-3}	68.95	70.31×10^{-3}	70.31	703.07	51.71	1

Ordering Code

SI - D - 50 x 50 - 10 - S - LB - MT

Series: SI: ISO 15552 Standard cylinder

Series Code: Blank: Standard double acting; D: Double-shaft double acting; J: Double-shaft with adjustable stroke

Bore: 32, 40, 50, 63, 80, 100, 125

Stroke

Adjustable Stroke: 10: 10mm; 20: 20mm; 30: 30mm; 50: 50mm; 75: 75mm; 100: 100mm

Magnet: S: With magnet; Blank: Without magnet

Mountings: Blank: Basic mountings; LB: Front and back mounting; FA: Front mounting flange; FB: Back mounting flange; CA: Back clevis (Single earring); CB: Back hinge (Double earring); YB: Back hinge

Sensor: JEL-30R type

* Standard wire is 1 meter, please order for other length

*All SI series standard cylinder with magnet.

Specification

Bore (mm)	32	40	50	63	80	100	125
Operation	Double Acting						
Working Medium	Air						
Mountings	Basic FA FB CA CB LB YB						
Operating Pressure Range	1 ~ 9.0 Kgf/cm^2						
Proof Pressure	13.5 Kgf/cm^2						
Operating Temperature Range	-20 ~ 70℃						
Operating Speed Range	50 ~ 800mm/s						
Cushion	Adjustable Cushion						
Adjustable Cushion Stroke	20 mm				26 mm		
Port Size	G1/8"	G1/4"		G3/8"		G1/2"	

Cylinder
Sizing
SI
SI A.
SIB
SQ
DNT
SC / SU
SCT
SC A.
SL
DN
DSN
DN/DSN A.
MA
MAC
MA/MAC A.
MAL
MALC
MAL/MACL A.
SDA
CQ2
TCQ2
ADN
TADN
PPRM
ZX
MHL2
Pneumatic Fingers
MXH
MXQ
CJP
CJ2
CDU
TN
CXS
MGP
MSQ

Stroke

Bore	Standard Stroke	Max. Stroke	Allowable Stroke
32	25 50 75 80 100 125 150 160 175 200 250 300 350 400 450 500	1000	2000
40	25 50 75 80 100 125 150 160 175 200 250 300 350 400 450 500 600 700 800	1200	2000
50	25 50 75 80 100 125 150 160 175 200 250 300 350 400 450 500 600 700 800 900 1000	1200	2000
63	25 50 75 80 100 125 150 160 175 200 250 300 350 400 450 500 600 700 800 900 1000	1500	2000
80	25 50 75 80 100 125 150 160 175 200 250 300 350 400 450 500 600 700 800 900 1000	1500	2000
100	25 50 75 80 100 125 150 160 175 200 250 300 350 400 450 500 600 700 800 900 1000	1500	2000
125	25 50 75 80 100 125 150 160 175 200 250 300 350 400 450 500 600 700 800 900 1000	1500	2000

Internal Structure

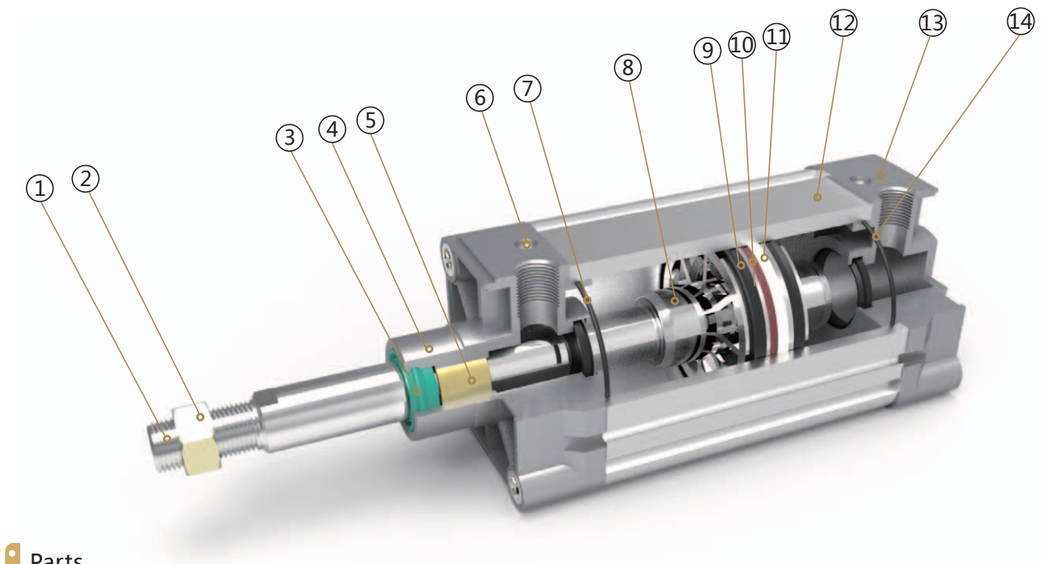

Parts

Number	Name	Number	Name
1	Piston rod	8	Piston
2	Hexagon nut	9	Y ring
3	Shaft seal	10	Magnet
4	Front cover	11	Anti-friction ring
5	Copper tube	12	Barrel
6	Cushion adjust screw	13	Back cover
7	Cushion seal	14	O ring

Cylinder
Sizing
SI
SI A.
SIB
SQ
DNT
SC / SU
SCT
SC A.
SL
DN
DSN
DN/DSN A.
MA
MAC
MA/MAC A.
MAL
MALC
MAL/MACL A.
SDA
CQ2
TCQ2
ADN
TADN
PPRM
ZX
MHL2
Pneumatic Fingers
MXH
MXQ
CJP
CJ2
CDU
TN
CXS
MGP
MSQ

Overall Dimension

SI

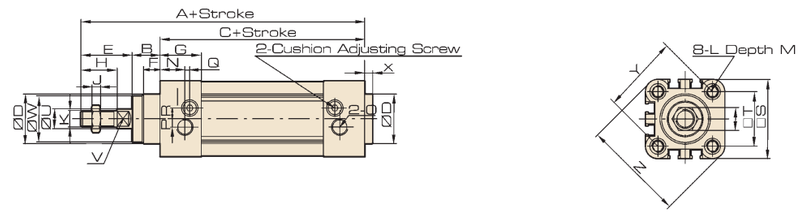

SID

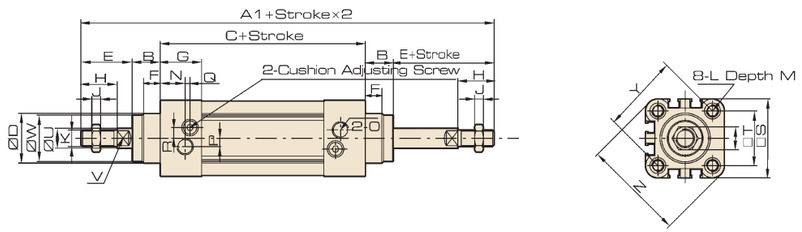

SIJ

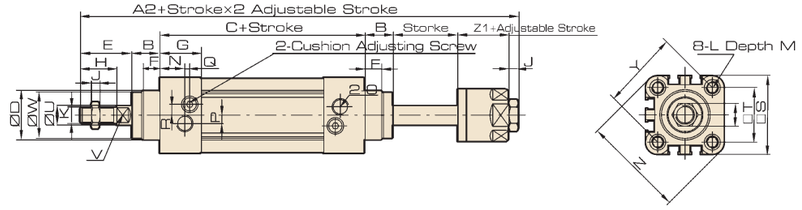

Dimension

Bore/ Symbol	A	A1	A2	B	C	D	E	F	G	H	I	J	K	L
32	142	190	185	16	94	30	33	10	25	22	17	6	M10x1.25	M6
40	159	213	207	20	105	35	34	10	29.5	24	17	7	M12x1.25	M6
50	175	244	233	27	106	40	42.5	10	32	32	23	8	M16x1.5	M8
63	190	258	247	26	122	45	42	10	36	32	23	8	M16x1.5	M8
80	214	301	288	35	126	45	53	10	37	40	26	10	M20x1.5	M10
100	229	321	308	40	137	55	52	10	39	40	26	10	M20x1.5	M10
125	277	394	378	46	160	60	71	10	43.5	54	40	10	M27x2	M12

Bore/ Symbol	M	N	O	P	Q	R	S	T	U	V	W	X	Y	Z	Z1
32	12	15	G1/8	5	3	6.5	45	32.5	12	10	28	4	46	58.7	21
40	12	17.5	G1/4	7	3	7	52	38	16	13	33	4	53.7	68	21
50	12	20	G1/4	7	3	9	65	46.5	20	17	38	4	65.8	84.5	23
63	12	22	G3/8	8	5	9	76	56.5	20	17	38	4	79.9	99.6	23
80	15	23	G3/8	10	5	12	94	72	25	22	43.5	5	101.8	123.8	29
100	15	26	G1/2	10	5	14	112	89	25	22	47	6	125.9	148.9	29
125	20	29	G1/2	10	5	14	134	110	32	27	53	7	156.9	179.6	40.5

Cylinder
Sizing
SI
SI A.
SIB
SQ
DNT
SC / SU
SCT
SC A.
SL
DN
DSN
DN/DSN A.
MA
MAC
MA/MAC A.
MAL
MALC
MAL/MACL A.
SDA
CQ2
TCQ2
ADN
TADN
PPRM
ZX
MHL2
Pneumatic Fingers
MXH
MXQ
CJP
CJ2
CDU
TN
CXS
MGP
MSQ

LB Foot

Overall Dimension

LB

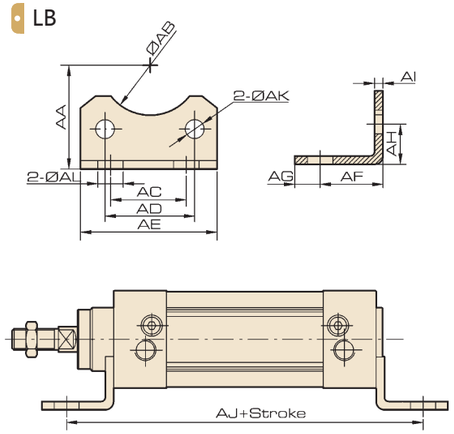

Dimension

Bore/Symbol	32	40	50	63	80	100	125
AA	32	36	45	50	63	71	90
AB	30	35	40	45	45	55	60
AC	32	36	45	50	63	75	90
AD	32.5	38	46.5	56.5	72	89	110
AE	45	52	65	75	95	115	140
AF	24	28	32	32	41	41	45
AG	11	8	15	13	14	16	18
AH	15.8	17	21.8	21.8	27	26.5	35
AI	4	4	5	5	6	6	8
AJ	142	161	170	185	210	220	250
AK	7	7	9	9	11	11	12.5
AL	7	10	10	10	12	14.5	16.5

FA / FB Flange

Overall Dimension

FA、FB

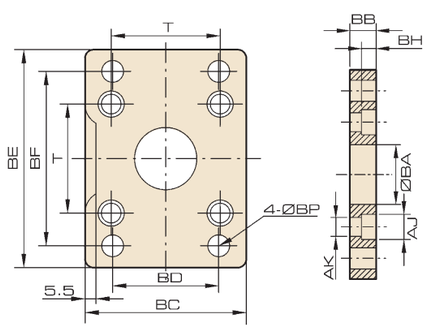

Bore/Symbol	32	40	50	63	80	100	125
BA	30.3	35.3	40.3	45.3	45.3	55.3	60.3
BB	10	10	12	12	16	16	20
BC	45	52	65	76	94	112	140
BD	32	36	45	50	63	75	90
BE	80	90	110	120	150	175	224
BF	64	72	90	100	126	150	180
BH	6.5	6.5	8.5	8.5	10.5	10.5	15
AJ	10.5	10.5	13.5	13.5	16.5	16.5	19
AK	6.5	6.5	8.5	8.5	10.5	10.5	12.5
BP	7	9	9	9	12	14	16
T	32.5	38	46.5	56.5	72	89	110

CA Hinge

Overall Dimension

CA

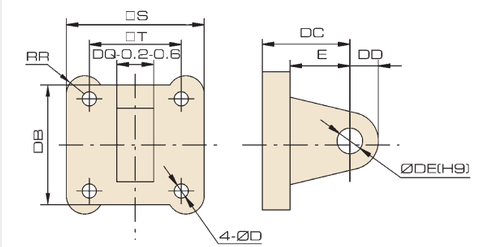

Dimension

Bore/Symbol	32	40	50	63	80	100	125
S	45	52	65	76	94	112	140
T	32.5	38	46.5	56.5	72	89	110
RR	6.5	6.5	9	9.5	11	11.5	12
DB	34	41	54	65	83	101	123
DC	22	25	27	32	36	41	50
DD	10	11	13	16	16	20	25
DE	10	12	12	16	16	20	25
DQ	26	28	32	40	50	60	70
D	6.5	6.5	8.5	8.5	10.5	10.5	12.5
E	14	17	17	22	24	25	30

CB Hinge

CB

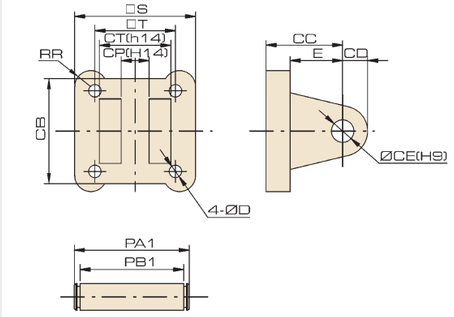

Bore/Symbol	32	40	50	63	80	100	125
S	45	52	65	76	94	112	140
T	32.5	38	46.5	56.5	72	89	110
D	6.5	6.5	8.5	8.5	10.5	10.5	12.5
E	14	17	17	22	24	25	30
RR	6.5	6.5	9	9.5	11	11.5	12
CB	34	41	54	65	83	101	123
CC	22	25	27	32	36	41	50
CD	10	11	13	16	46	20	25
CE	10	12	12	16	16	20	25
CP	26	28	32	40	50	60	70
CT	45	52	60	70	90	110	120
PA1	53	60	68	78	100	120	130
PB1	46.5	53.5	61.5	71.5	91.5	111.5	121.5

YB Hinge

YB

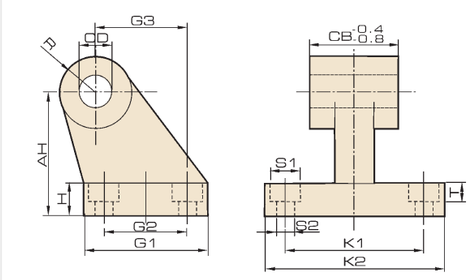

Bore/Symbol	32	40	50	63	80	100	125
AH	32	36	45	50	63	71	90
H	8	10	12	12	14	15	20
CD	10	12	12	16	16	20	25
G1	31	35	45	50	60	70	90
G2	18	22	30	35	40	50	60
G3	21	24	33	37	47	55	70
CB	26	28	32	40	50	60	70
K1	38	41	50	52	66	76	94
K2	51	54	65	67	86	96	124
S1	11	11	14	14	17	17	20
S2	6.6	6.6	9	9	11	11	14
T	1.6	1.6	1.6	1.6	2.5	2.5	3.2
R	10	11	13	15	15	19	22.5

Cylinder
Sizing
SI
SI A.
SIB
SQ
DNT
SC / SU
SCT
SC A.
SL
DN
DSN
DN/DSN A.
MA
MAC
MA/MAC A.
MAL
MALC
MAL/MACL A.
SDA
CQ2
TCQ2
ADN
TADN
PPRM
ZX
MHL2
Pneumatic Fingers
MXH
MXQ
CJP
CJ2
CDU
TN
CXS
MGP
MSQ

JELPC® | JELPC — China Pneumatic

Features

SIB series booster cylinder is the combination of two ISO15552 standard cylinders which share the same bore size and stroke. Its push and restoring force is two times of the standard cylinder. Two cylinders are linked by the connect base whose material is the same as the cylinder. It is compact in structure and easy for installation.

Ordering Code

SIB	-	63	x	50	x	50	-	S	-	LB	-	MT
Series Code		Bore		Stroke		Stroke		Magnet		Mountings		Sensor switch
SIB: Double acting booster cylinder.		32 40 50 63 80 100 125						S: With magnet Blank: Without magnet		Blank: Basic mountings LB: Front and back mounting FA: Front mounting flange FB: Back mounting flange CA: Back clevis (single earring) CB: Back hinge (double earring) YB: Back hinge		JEL-30R Type * Standard wire is 1 meter, please order for other length

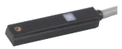

※ All SIB series cylinders are with magnetic.

Specification

Bore (mm)	32	40	50	63	80	100	125
Operation	Double Acting						
Working Medium	Air						
Mounting	Basic FA FB CA CB LB YB						
Operating Pressure Range	1 ~ 9.0 kgf/cm²						
Proof Pressure	13.5 kgf/cm²						
Operating Temperature Range	-20 ~ 70℃						
Operating Speed Range	50 ~ 800 mm/s						
Cushion	Air Cushion						
Adjustable Cushion Stroke	20 mm			26 mm			
Port Size	G1/8"	G1/4"		G3/8"		G1/2"	

ISO9001:2008 CE

SIB Series
Double Acting Booster Cylinder

Overall Dimension

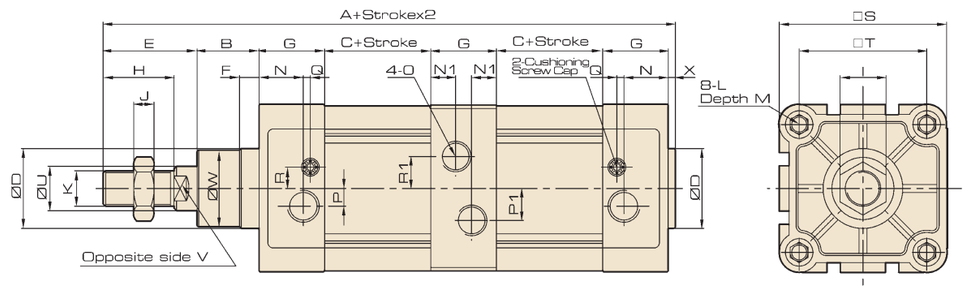

Dimension

Model Symbol	A	B	C	D	E	F	G	H	I	J	K	L	M
32	214	16	43	30	33	10	25	22	17	6	M10X1.25	M6	9.5
40	236.5	20	45	35	34	10	29.5	24	17	7	M12X1.25	M6	9.5
50	252	27	41	40	42.5	10	32	32	23	8	M16X1.5	M6	9.5
63	278	26	49	45	42	10	36	32	23	8	M16X1.5	M8	9.5
80	308	35	52	45	53	10	37	40	26	10	M20X1.5	M10	11.5
100	326	40	59	55	52	10	39	40	26	10	M20X1.5	M10	11.5
125	399	46.5	72	60	71	10	43.5	54	40	10	M27X2	M12	15.5

Model Symbol	N	N1	O	P	P1	Q	R	R1	S	T	U	V	W	X
32	15	7.5	G1/8	5	6	3	6.5	6	45	32.5	12	10	28	4
40	17.5	9.5	G1/4	7	7.5	3	7	7.5	52	38	16	13	33	4
50	20	16	G1/4	7	10.5	3	9	10.5	65	46.5	20	17	38	4
63	22	13	G3/8	8	13	5	9	13	76	56.5	20	17	38	4
80	23	14	G3/8	10	18	5	12	18	94	72	25	22	43.5	5
100	26	19.5	G1/2	10	20	5	14	20	112	89	25	22	47	6
125	29	21.75	G1/2	10	30	5	14	30	134	110	32	27	53	6.5

Cylinder
Sizing
SI
SI A.
SIB
SQ
DNT
SC / SU
SCT
SC A.
SL
DN
DSN
DN/DSN A.
MA
MAC
MA/MAC A.
MAL
MALC
MAL/MACL A.
SDA
CQ2
TCQ2
ADN
TADN
PPRM
ZX
MHL2
Pneumatic Fingers
MXH
MXQ
CJP
CJ2
CDU
TN
CXS
MGP
MSQ

Patent Product
Copies must be investigated

Patent No. : ZL 200930344937.0
ZL 200920124808.5

Feature

SQ Series cylinder is a new super economical cylinder patent product. Body and covers are latest innovated, with new structure, smart, cost reduced, material saved. The installation dimension is the same as SI, conforms to ISO 15552 standard.

Ordering Code

SQ	-	D	-	50	x	50	-	10	-	S	-	LB	-	MT
Series		Series Code		Bore		Stroke		Adjustable Stroke		Magnet		Mountings		Sensor

Series
- SQ: ISO 15552 Standard cylinder

Series Code
- Blank: Standard double acting
- D: Double-shaft double acting

- J: Double-shaft with adjustable stroke

Bore
- 32
- 40
- 50
- 63
- 80
- 100
- 125
- 160
- 200

Stroke
- 25-1000mm

Adjustable Stroke
- 10: 10mm
- 20: 20mm
- 30: 30mm
- 50: 50mm
- 75: 75mm
- 100: 100mm

Magnet
- S: With magnet
- Blank: Without magnet

Mountings
- Blank: Basic mountings
- LB: Front and back mounting

- FA: Front mounting flange
- FB: Back mounting flange

- CA: Back clevis (Single earring)

- CB: Back hinge (Double earring)

- YB: Back hinge

Sensor
- Blank: Without Sensor
- JEL-30R type

- * Standard wire is 1 meter, please order for other length

Specification

Bore (mm)	32	40	50	63	80	100	125	160	200
Operation	Double Acting								
Working Medium	Air								
Mounting	Basic FA FB CA CB LB YB								
Operating Pressure Range	0.1 ~ 1MPa								
Proof Pressure	1.5MPa								
Operating Temperature Range	-20 ~ 70℃								
Operating Speed Range	50 ~ 800mm/s						30-500mm/s		
Cushion	Adjustable Cushion								
Adjustable Cushion Stroke	20mm				26mm		40mm	50mm	
Port Size	G1/8"	G1/4"		G3/8"		G1/2"		G3/4"	

Super Economical Type SQ Series
Standard Cylinder
(Conforms to ISO15552 Standard)

Internal Structure

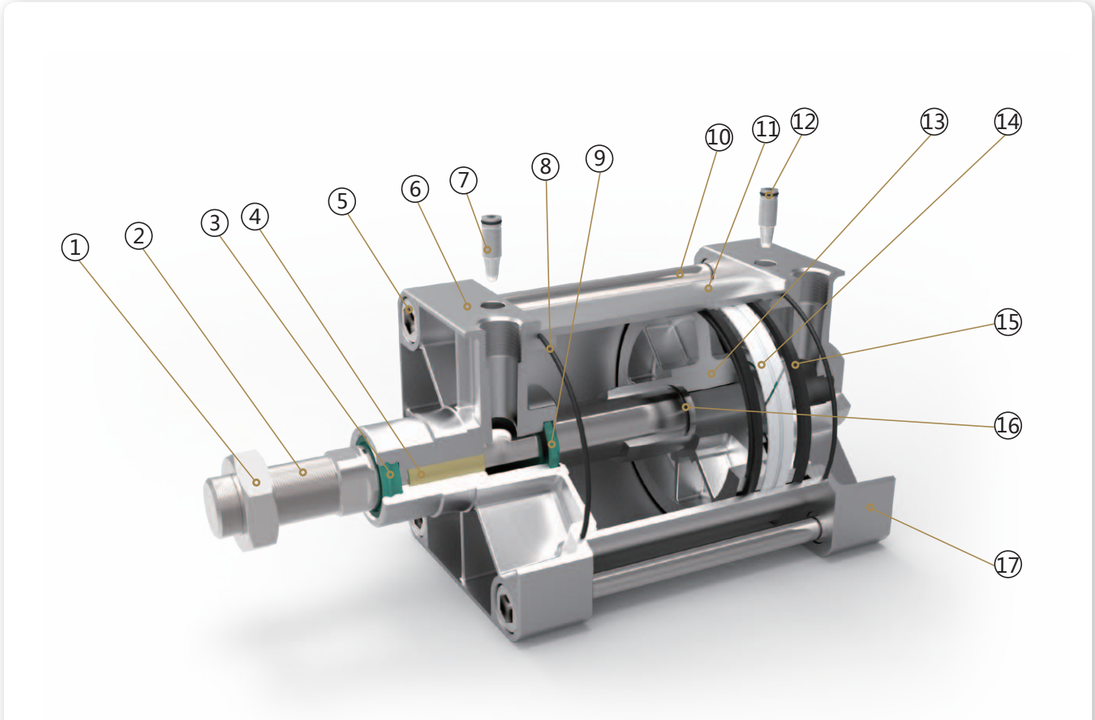

Parts

Number	Name	Number	Name
1	Hexagon nut	10	Tie Rod
2	Piston rod	11	Barrel
3	Shaft seal	12	O ring
4	DU Bearing	13	Piston
5	Cover screw	14	Anti-friction ring
6	Front cover	15	Piston seal
7	Cushion adjust screw	16	O ring
8	O ring	17	Back cover
9	Cushion seal		

Cylinder
Sizing
SI
SI A.
SIB
SQ
DNT
SC / SU
SCT
SC A.
SL
DN
DSN
DN/DSN A.
MA
MAC
MA/MAC A.
MAL
MALC
MAL/MACL A.
SDA
CQ2
TCQ2
ADN
TADN
PPRM
ZX
MHL2
Pneumatic Fingers
MXH
MXQ
CJP
CJ2
CDU
TN
CXS
MGP
MSQ

Overall Dimension

SQ32-100

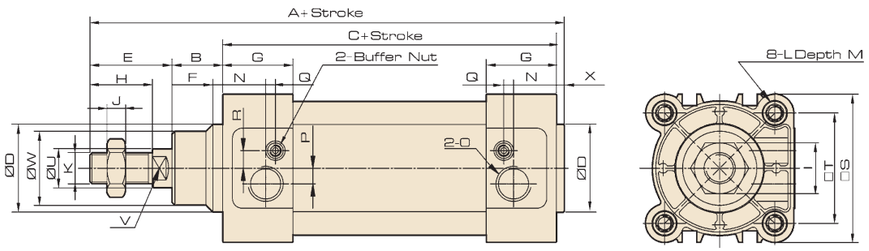

Dimension

Bore / Symbol	A	B	C	D	E	F	G	H	I	J	K	L
32	142	16	94	30	33	4	25	22	17	6	M10x1.25	M6
40	159	20	105	35	34	4	29.5	24	17	7	M12x1.25	M6
50	175	27	106	40	42.5	5	32	32	23	8	M16x1.5	M8
63	190	26	122	45	42	5	36	32	23	8	M16x1.5	M8
80	214	35	127	45	53	6	37	40	26	10	M20x1.5	M10
100	229	40	137	55	52	6	39	40	26	10	M20x1.5	M10

Bore / Symbol	M	N	O	P	Q	R	S	T	U	V	W	X
32	12	15	G1/8	5	3	6.5	45	32.5	12	10	25	4
40	12	17.5	G1/4	7	3	7	52	38	16	13	33	4
50	12	20	G1/4	7	3	9	65	46.5	20	17	36	4
63	12	22	G3/8	8	5	9	76	56.5	20	17	38	4
80	15	23	G3/8	10	5	12	94	72	25	22	43	5
100	15	26	G1/2	10	5	14	112	89	25	22	43.5	6

*The installation dimension of super economy SQ series cylinder is the same as SI series cylinder and all the cylinder acessories and sensor switch can share with SI cylinder.

Overall Dimension

SQ125-200

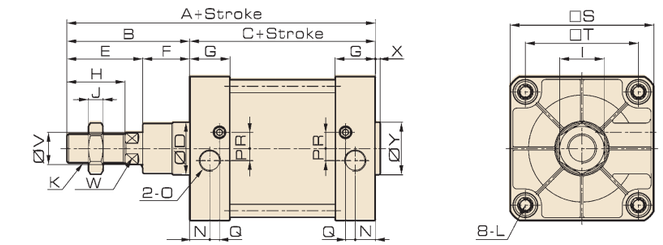

Dimension

Bore / Symbol	A	B	C	D	E	F	G	H	I	J	K
125	279	119	160	60	74	45	46	54	41	13.5	M27×2
160	332	152	180	65	94	58	50	72	55	18	M36×2
200	347	167	180	75	100	67	50	72	55	18	M36×2

Bore / Symbol	L	N	O	P	Q	R	S	T	V	W	X	Y
125	M12	23	G1/2	14	12	14	140	110	32	27	4	60
160	M16	25	G3/4	15	12	20	180	140	40	36	4	65
200	M16	25	G3/4	15	12	20	220	175	40	36	5	75

* Cylider with or without magnet is the same size.

Overall Dimension

SQD125-200

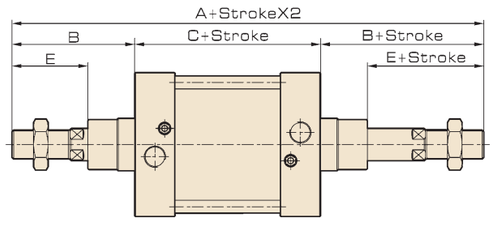

SQJ125-200

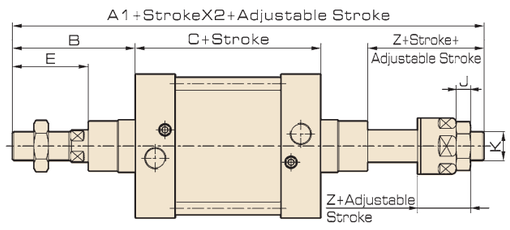

Dimension

Bore / Symbol	A	A1	B	C	E	Z	J	K
125	398	366.5	119	160	74	42.5	13.5	M27×2
160	484	458	152	180	94	68	18	M36×2
200	514	482	167	180	100	68	18	M36×2

* 1. Cylider with or without magnet is the same size. 2. The no marked size is same with SQ standard.

DNT Series
Economical Cylinder (Conforms to ISO15552 Standard)

JELPC® | JELPC — China Pneumatic

Features

Economical DNT series cylinder features with the same installation dimension as SI series, conforms to ISO15552 standard. New design of profile and structure, compact and energy saving.

Ordering Code

DNT	-	63	x	50	-	10	-	S	-	LB	-	MT
Series		Bore		Stroke		Adjustable Stroke		Magnet		Mountings		Sensor

Series
- DNT: Economical standard cylinder
- DNTD: Double-shaft
- DNTJ: Double-shaft with adjustable stroke

Bore: 32, 40, 50, 63, 80, 100, 125

Stroke: 25-1000 mm

Adjustable Stroke: 10: 10mm; 20: 20mm; 30: 30mm; 50: 50mm; 75: 75mm; 100: 100mm

Magnet
- S: With magnet
- Blank: Without magnet

Mountings
- Blank: Basic mounting
- LB: Front and back mounting
- FA: Front mounting flange
  FB: Back mounting flange
- CA: Back clevis (single earring)
- CB: Back hinge (double earring)
- YB: Back hinge

Sensor
- JEL-30R type 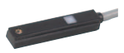
- * Standard wire is 1 meter, please order for other length

※ Please contact with JELPC for special requirements.
※ All DNT series with magnetic.

Installational Dimension

All the dimension of DNT series are the same as SI series. Please consult SI series for accessories and sensor switch for applications.

Barrel of DNT Cylinder

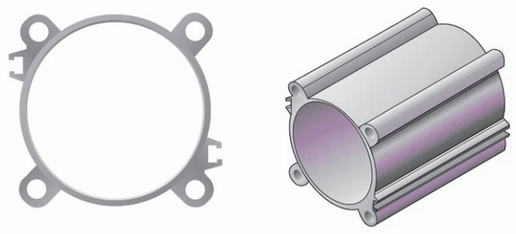

ISO9001:2008 CE

SC / SU Series
Standard Cylinder

SU50×100-FA | SCJ40×75-50 | SC40×100-S | SC80×50-S | SC100×150

Ordering Code

SC	-	D	-	50	x	50	-	25	-	S	-	LB	-	MT
Series		Series Code		Bore		Stroke		Adjustable Stroke		Magnet		Mountings		Sensor

Series
- SC: Tie rod type
- SU: Profile type

Series Code
- Blank: Standard double acting
- D: Double-shaft double acting
- J: Double-shaft with adjustable stroke type

Bore: 32, 40, 50, 63, 80, 100, 125, 160, 200, 250, 320

Stroke

Adjustable Stroke: 10: 10mm; 20: 20mm; 30: 30mm; 50: 50mm; 75: 75mm; 100: 100mm

Magnet
- S: With magnet
- Blank: Without magnet

Mountings
- Blank: Basic mounting
- LB: Foot
- FA: Front flange
  FB: Back flange
- CA: Back hinge
- CB: Back hinge
- TC-M: Center trunnion

Sensor
- JEL-21R Type
- SC: Bracket for switch
- SU: Bracket for switch
- * Standard wire is 1 meter, please order for other length

Specification

Bore (mm)	32	40	50	63	80	100	125	160	200	250	320
Operation	Double Acting										
Working Medium	Air										
*Mountings	Basic FA FB CA CB LB TC TC-M										
Operating Pressure Range	1 ~ 9.0Kgf/cm^2										
Proof Pressure	13.5Kgf/cm^2										
Operating Temperature Range	-20 ~ 70℃										
Operating Speed Range	50 ~ 800mm/s										
Cushion	Adjustable Cushion										
Adjustable Cushion Stroke	20mm				26mm				45mm	52mm	66mm
Port Size	G1/8"	G1/4"		G3/8"		G1/2"			G3/4"	G1"	

* SCD, SCJ mountings: FA, FB, LB, TC and TC-M type.

Cylinder
Sizing
SI
SI A.
SIB
SQ
DNT
SC / SU
SCT
SC A.
SL
DN
DSN
DN/DSN A.
MA
MAC
MA/MAC A.
MAL
MALC
MAL/MACL A.
SDA
CQ2
TCQ2
ADN
TADN
PPRM
ZX
MHL2
Pneumatic Fingers
MXH
MXQ
CJP
CJ2
CDU
TN
CXS
MGP
MSQ

Cylinder
Sizing
SI
SI A.
SIB
SQ
DNT
SC / SU
SCT
SC A.
SL
DN
DSN
DN/DSN A.
MA
MAC
MA/MAC A.
MAL
MALC
MAL/MACL A.
SDA
CQ2
TCQ2
ADN
TADN
PPRM
ZX
MHL2
Pneumatic Fingers
MXH
MXQ
CJP
CJ2
CDU
TN
CXS
MGP
MSQ

Stroke

Bore	Standard Stroke	Max. Stroke	Allowable Stroke
32	25 50 75 80 100 125 150 160 175 200 250 300 350 400 450 500	1000	2000
40	25 50 75 80 100 125 150 160 175 200 250 300 350 400 450 500 600 700 800	1200	2000
50	25 50 75 80 100 125 150 160 175 200 250 300 350 400 450 500 600 700 800 900 1000	1200	2000
63	25 50 75 80 100 125 150 160 175 200 250 300 350 400 450 500 600 700 800 900 1000	1500	2000
80	25 50 75 80 100 125 150 160 175 200 250 300 350 400 450 500 600 700 800 900 1000	1500	2000
100	25 50 75 80 100 125 150 160 175 200 250 300 350 400 450 500 600 700 800 900 1000	1500	2000
125	25 50 75 80 100 125 150 160 175 200 250 300 350 400 450 500 600 700 800 900 1000	1500	2000
160	25 50 75 80 100 125 150 160 175 200 250 300 350 400 450 500 600 700 800 900 1000	1500	2000
200	25 50 75 80 100 125 150 160 175 200 250 300 350 400 450 500 600 700 800 900 1000	1500	2000
250	25 50 75 80 100 125 150 160 175 200 250 300 350 400 450 500 600 700 800 900 1000	1500	2000
320	25 50 75 80 100 125 150 160 175 200 250 300 350 400 450 500 600 700 800 900 1000	1500	2000

Internal Structure

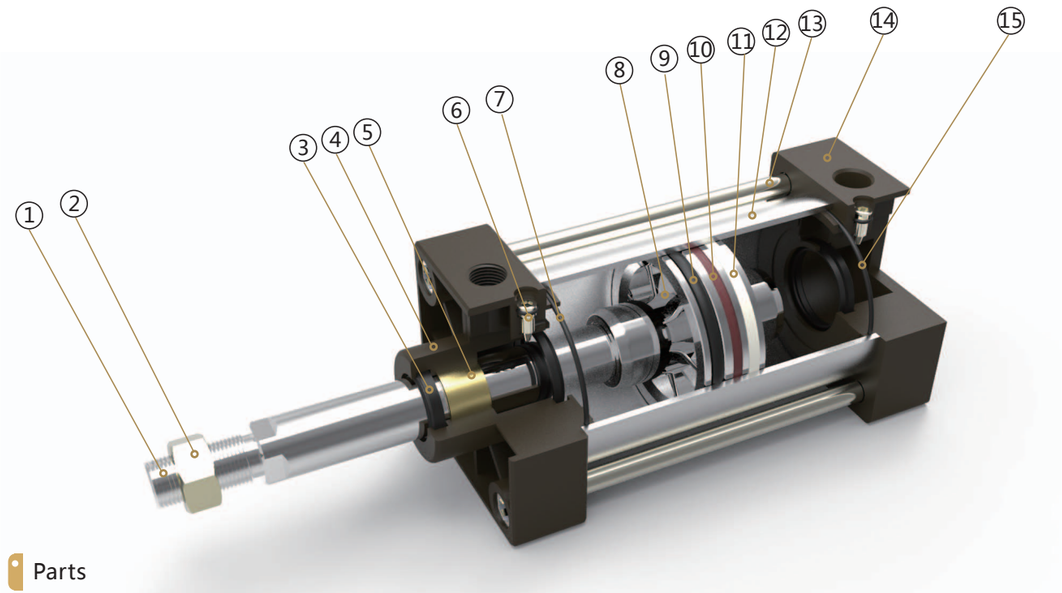

Parts

Number	Name	Number	Name
1	Piston rod	9	Piston seal
2	Hexagon nut	10	Magnet
3	Shaft seal	11	Anti-friction ring
4	Front cover	12	Barrel
5	Copper tube	13	Pull rod
6	Cushion adjust screw	14	Back cover
7	Cushion seal	15	O ring
8	Piston		

Overall Dimension

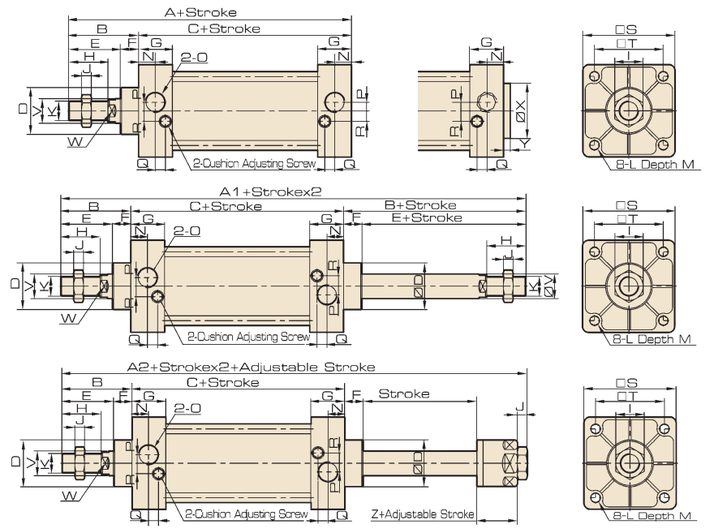

Dimension

Bore/ Symbol	A	A1	A2	B	C	D	E	F	G	H	I	J	K	L
32	140	187	182	47	93	28	32	15	27.5	22	17	6	M10×1.25	M6
40	141	191	185	48	93	32	34	15	27.5	24	17	7	M12×1.25	M6
50	150	207	196	57	93	38	42	15	27.5	32	23	8	M16×1.5	M6
63	153	210	199	57	96	38	42	15	27.5	32	23	8	M16×1.5	M8
80	183	258	243	75	108	47	54	21	33	40	26	10	M20×1.5	M10
100	189	264	249	75	114	47	54	21	33	40	26	10	M20×1.5	M10
125	226	330	313	104	122	55	70	34	33	54	40	10	M27×2	M12
160	291	414	377	123	168	62	93	30	50	72	55	18	M36×2	M16
200	347	514	458	167	180	80	112	55	50	72	55	18	M36×2	M16
250	389	578	/	189	200	90	122	67	54	84	65	21	M42×2	M20
320	436	652	/	216	220	110	126	90	65	96	75	24	M48×2	M24

Bore/ Symbol	M	N	O	P	Q	R	S	T	V	W	Z	X	Y
32	9.5	13.5	G1/8	3.5	7.5	7	45	33	12	10	21	/	/
40	9.5	1.5	G1/4	6	8.2	9	50	37	16	14	21	/	/
50	9.5	13.5	G1/4	8.5	8.2	9	62	47	20	17	23	/	/
63	9.5	13.5	G3/8	7	8.2	8.5	75	56	20	17	23	/	/
80	11.5	16.5	G3/8	10	9.5	14	94	70	25	22	29	/	/
100	11.5	16.5	G1/2	11	9.5	14	112	84	25	22	29	/	/
125	15.5	16.5	G1/2	10	10	11	140	110	32	27	/	/	/
160	17.5	25	G1/2	/	/	/	180	140	40	36	/	/	/
200	17.5	25	G3/4	/	/	/	220	175	40	36	/	/	/
250	25	31	G1	18.5	5	40	270	220	50	46	/	90	10
320	28	31	G1	35	15	35	350	270	63	55	/	110	10

Cylinder
Sizing
SI
SI A.
SIB
SQ
DNT
SC / SU
SCT
SC A.
SL
DN
DSN
DN/DSN A.
MA
MAC
MA/MAC A.
MAL
MALC
MAL/MACL A.
SDA
CQ2
TCQ2
ADN
TADN
PPRM
ZX
MHL2
Pneumatic Fingers
MXH
MXQ
CJP
CJ2
CDU
TN
CXS
MGP
MSQ

Cylinder
Sizing
SI
SI A.
SIB
SQ
DNT
SC / SU
SCT
SC A.
SL
DN
DSN
DN/DSN A.
MA
MAC
MA/MAC A.
MAL
MALC
MAL/MACL A.
SDA
CQ2
TCQ2
ADN
TADN
PPRM
ZX
MHL2
Pneumatic Fingers
MXH
MXQ
CJP
CJ2
CDU
TN
CXS
MGP
MSQ

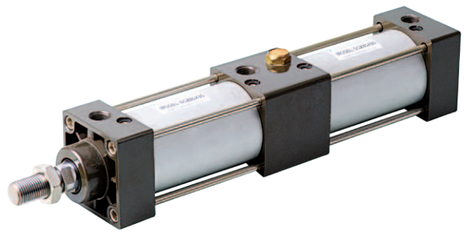

Ordering Code

SCT	-	63	x	30	-	50	-	S	-	LB
Series		Bore		Stroke 1		Stroke 2		Magnet		Mountings
SCT: Muti-position cylinder		32						S: With magnet		Blank: Basic mounting
		40						Blank: Without magnet		LB: Foot
		50								FA: Front flange
		63								FB: Back flange
		80								CA: Back hinge
		100								CB: Back hinge

*It is booster cylinder while secend stroke is 0.

Overall Dimension

SCT

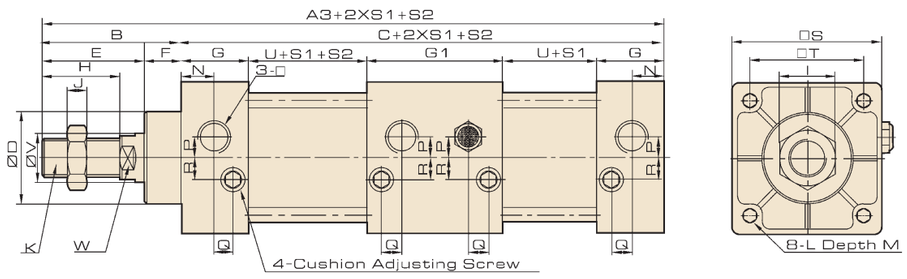

Dimension

Bore/ Symbol	A3	B	C	D	E	F	G	G1	H	I	J	K
32	233	47	186	28	32	15	27.5	55	22	17	6	M10x1.25
40	235	49	186	32	34	15	27.5	55	24	17	7	M12x1.25
50	243	57	186	38	42	15	27.5	55	32	23	8	M16x1.5
63	249	57	192	38	42	15	27.5	55	32	23	8	M16x1.5
80	296	75	221	47	54	21	33	73	40	26	10	M20x1.5
100	310	75	235	47	54	21	33	73	40	26	10	M20x1.5
125	350	104	122	55	70	34	33	66	54	40	10	M27x2

Bore/ Symbol	L	M	N	O	P	Q	R	S	T	V	U	W
32	M6x1	9.5	13.7	G1/8	3.5	7.5	7	45	33	12	38	10
40	M6x1	9.5	13.5	G1/4	6	8.2	9	50	37	16	38	14
50	M6x1	9.5	13.5	G1/4	8.5	8.2	9	62	47	20	38	17
63	M8x1.25	9.5	13.5	G3/8	7	8.2	8.5	75	56	20	41	17
80	M10x1.5	11.5	16.5	G3/8	10	9.5	14	94	70	25	41	22
100	M10x1.5	11.5	16.5	G1/2	10	9.5	14	112	84	25	47	22
125	M12x1.75	15.5	16.5	G1/2	10	10	11	140	110	32	57	27

LB Foot

Overall Dimension

LB

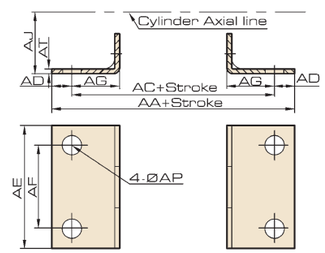

Dimension

Bore/Symbol	32	40	50	63	80	100	125	160	200
AA	153	169	173	184	200	210	249	328	380
AC	134	140	149	158	168	174	249	288	320
AD	9.5	14.5	12	12	16	18	18	20	30
AE	50	57	68	80	97	112	140	180	220
AF	33	36	47	56	70	84	90	115	135
AG	20.5	23.5	28	31	30	30	45	60	70
AJ	28	30	36.5	41	49	57	90	115	135
AP	9	12	12	12	14	14	16	18	22
AT	3	3	3	3	4	4	7	8.5	9

FA / FB Flange

FA、FB

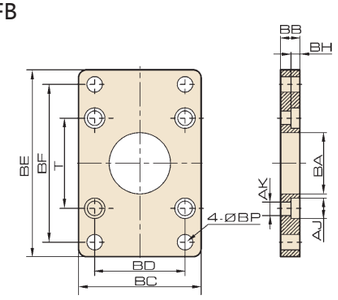

Bore/Symbol	32	40	50	63	80	100	125	160	200
BA	28.3	32.3	38.3	38.3	47.3	47.3	56	63	81
BB	10	10	10	12	16	16	20	20	25
BC	47	52	65	76	95	115	140	180	220
BD	33	36	47	56	70	84	90	115	135
BE	72	84	104	116	143	162	224	280	320
BF	58	70	86	98	119	138	180	230	270
BH	6.5	6.5	6.5	8.5	10.5	10.5	15	20	20
AJ	10.5	10.5	10.5	13.5	16.6	16.6	19	25	25
AK	6.5	6.5	6.5	8.5	10.5	10.5	12.5	16.5	16.5
BP	7	7	9	9	12	12	16	18	22
T	33	37	47	56	70	84	110	140	175

CA Clevis

CA

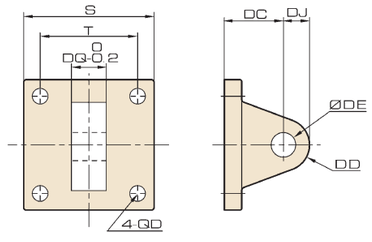

Bore/Symbol	32	40	50	63	80	100	125	160	200
S	45	50	62	75	94	112	140	180	220
T	33	37	47	56	70	84	110	140	175
DC	34	34	34	34	48	48	50	55	60
DD	14	14	15	15	20	20	25	30	30
DE	12	14	14	14	20	20	25	30	30
DJ	14	14	15	15	20	20	25	30	30
DQ	16	20	20	20	32	32	70	90	90
D	6.5	6.5	6.5	8.5	10.5	10.5	12.5	16.5	16.5

Cylinder
Sizing
SI
SI A.
SIB
SQ
DNT
SC / SU
SCT
SC A.
SL
DN
DSN
DN/DSN A.
MA
MAC
MA/MAC A.
MAL
MALC
MAL/MACL A.
SDA
CQ2
TCQ2
ADN
TADN
PPRM
ZX
MHL2
Pneumatic Fingers
MXH
MXQ
CJP
CJ2
CDU
TN
CXS
MGP
MSQ

CB Double Earring

Overall Dimension

CB

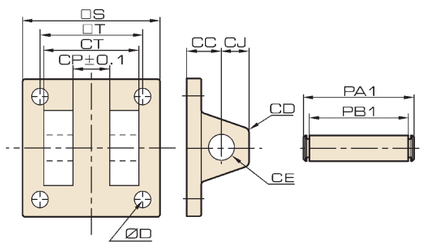

Dimension

Bore/Symbol	32	40	50	63	80	100	125	160	200
CC	19	19	19	19	32	32	50	55	60
CD	5	5	3	3	8	8	25	30	30
CE	12	14	14	14	20	20	25	30	30
CJ	13	13	15	15	21	21	25	30	30
CP	16.3	20.5	20.3	20.3	32.3	32.3	70	90	90
CT	32	44	52	52	64	64	120	160	160
PAI	41	53	61	61	75	75	136	184	194
PBI	34	46	54	54	66	66	124	170	180
S	48	50	62	75	94	112	140	180	220
T	33	37	47	56	70	84	110	140	175
D	6.5	6.5	6.5	8.5	10.5	10.5	12.5	16.5	16.5

TC Center Trumion

Overall Dimension

TC

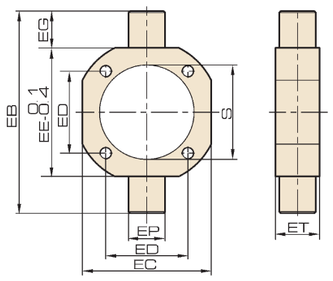

Bore/Symbol	32	40	50	63	80	100	125	160	200
EB	87	113	126	138	164	182	210	264	316
EC	53	63	76	88	114	132	160	200	233
ED	33	37	47	56	70	84	110	140	175
EE	55	63	76	88	114	132	160	200	233
EG	16	25	25	25	25	25	25	32	35
EP	16	25	25	25	25	25	30	32	32
ET	30	30	30	30	35	40	38	38	46
S	37.5	45.5	55.5	68.5	87.5	107.5	134.5	172.5	215

SC / SU Series
Standard Cylinder Accessory

Y/I Knuckle

Overall Dimension

Y

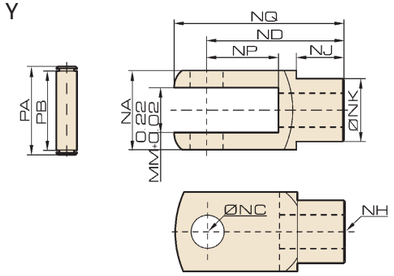

I

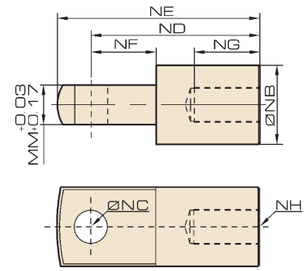

Dimension

Bore/Symbol	NA	NB	NC	ND	NE	NF	NG	NH	NJ	NK	MM	NP	NQ	PA	PB
32	19	20	10	40	52	15	20	M10×1.25	15.5	16	10	20	52	30	21
40	24	24	12	48	67	24	20	M12×1.25	20.5	20	12	24	62	36	27
50	32	32	16	64	89	32	23	M16×1.5	26	30	16	32	83	44	34
63	32	32	16	64	89	32	23	M16×1.5	26	30	16	32	83	44	34
80	40	40	20	80	112	40	30	M20×1.5	30	38	20	39.5	105	52	42
100	40	40	20	80	112	40	30	M20×1.5	30	38	20	39.5	105	52	42
125	62	49	20	99	122	54	50	M27×2	28	38	30	43	120	75	66
160	70	61	30	125	155	43	70	M36×2	40	53	40	43	153	96	82
200	70	61	30	125	155	43	70	M36×2	40	53	40	43	153	96	82

CK Type Y Knuckle

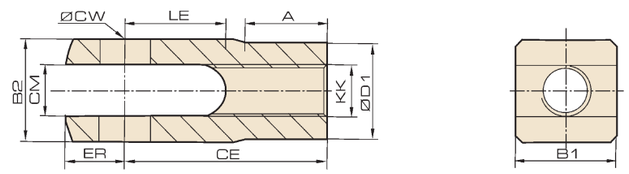

Dimension

Bore/Symbol	NH	KK	A	B1	B2	CE	CW	CM	D1	ER	LE
20	CK-M6×1	M6×1	9.5	12	12	24	6	6	10	7	12
25	CK-M8×1.25	M8×1.25	13.5	16	16	32	8	8	14	10	16
32	CK-M10×1.25	M10×1.25	15.5	19	19	40	10	10	16	12	20
40	CK-M12×1.25	M12×1.25	20.5	24	24	48	12	12	20	14	24
50/63	CK-M16×1.5	M16×1.5	26	32	32	64	16	16	30	19	32
80/100	CK-M20×1.5	M20×1.5	30	40	40	80	20	20	39	25	39.5

Cylinder
Sizing
SI
SI A.
SIB
SQ
DNT
SC / SU
SCT
SC A.
SL
DN
DSN
DN/DSN A.
MA
MAC
MA/MAC A.
MAL
MALC
MAL/MACL A.
SDA
CQ2
TCQ2
ADN
TADN
PPRM
ZX
MHL2
Pneumatic Fingers
MXH
MXQ
CJP
CJ2
CDU
TN
CXS
MGP
MSQ

PHSA Universal Piston Rod Eye

Overall Dimension

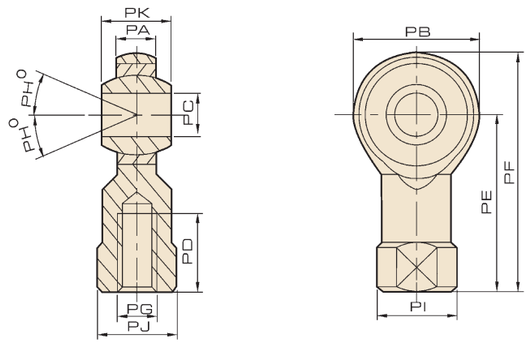

Dimension

Bore/Symbol	PA	PB	PC	PD	PE	PF	PG	PH	PI	PJ	PK
12 / 16	6.75	20	6	12	31	41	M6X1	15	13	11	9
20	9	24	8	15	37	49	M8X1.25	15	16	14	12
25 / 32	10.5	28	10	18	43	57	M10X1.25	15	19	17	14
40	12	32	12	22	51	67	M12X1.25	15	22	19	16
50 / 63	15	40	16	28	64	84	M16X1.5	15	27	24	21
80 / 100	18	50	20	35	77	104	M20X1.5	15	34	30	25
125	24	70	30	58	113	148	M27X2	15	50	41	37
160 / 200	26	81	35	56	125	165.5	M36X2	15	58	50	43

FDJT Piston Floating Jiont

Overall Dimension

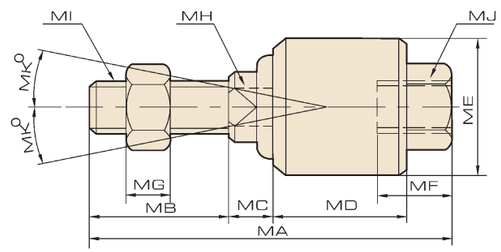

Dimension

Bore/Symbol	MA	MB	MC	MD	ME	MF	MG	MH	MI	MJ	MK
12 / 16	36	14	4	14	16	7.5	10	6	M6X1	M6X1	12
20	53	21	8	18.5	24	10	12.5	8	M8X1.25	M8X1.25	12
25 / 32	59	22	9	22	26	13	17	10	M10X1.25	M10X1.25	12
40	65	21	12	24	32	15	19	12	M12X1.25	M12X1.25	12
50 / 63	90	30	12	36	45	22	27	17	M16X1.5	M16X1.5	7
80 / 100	102	32	17	40	53	25	32	22	M20X1.5	M20X1.5	10
125	120	37	15	48	60	35	41	26	M27X2	M27X2	10

Ordering Code

SL	-	F	-	63	x	50	-	S	-	LB	-	MT
Series		Lock Position		Bore		Stroke		Magnet		Mountings		Sensor switch
SL : Lock type cylinder		F : Front cover with Lock R : Back cover with Lock		63		50-1000mm		S: With magnet Blank: Without magnet		Blank: Basic mountings LB: Front and back mounting FA: Front mounting flange FB: Back mounting flange CA: Back clevis (single earring) CB: Back hinge (double earring) TC : Center trunnion TC-M : Trunnion with base mounting		JEL-21R Type SC Clamp * Standard wire is 1 meter, please order for other length

Symbol

SLF

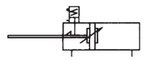

SLR

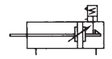

Internal Structure

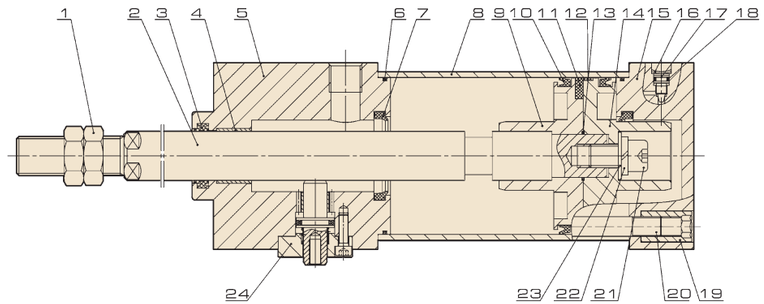

Parts

Item	Name	Item	Name	Item	Name
1	Hexagon thin nut	9	Front piston	17	Regulator pin
2	Piston rod	10	Y ring	18	O ring
3	Anti-dust ring	11	Magnet	19	Tie rod nut
4	DU bearing	12	Lead way bend	20	Tie rod
5	Front cover	13	O ring	21	Inner hexagon pin
6	O ring	14	Back piston	22	Spring washer
7	Cushion ring	15	Backcover	23	Flat washer
8	Barrel	16	Lock slice	24	Lockset

JELPC® | JELPC — China Pneumatic

Features

1. Improving for adapting wide range applications, using precisepolishing of piston rod, more sense of products quality and longer life of front seal.
2. Optima design and improve the production efficiency.
3. Combined with enterprise color planning and new structure design,stainless steel series cylinder integrated as the semicircular groove cramping.
4. Using embedded gasket, increase the pressured area of pistons after collision.

DN25X75

Ordering Code

DN	-	U	-	32	x	50	-	10	-	S	-	E	-	LB	-	MT
Series		Back Form		Bore		Stroke		Adjustable Stroke		Magnet		Piston Rod Material		Mountings		Sensor

Series

DN: Double Acting

DS: Single acting, Spring-out

DT: Single acting, Spring-in

DND: Double-shaft

DNJ: Double-shaft with adjustable stroke

Back Form

Blank: Standard with eye mounting

CM: Standard with round back cover

U: Standard with flat back cover

Bore

8
10
12
16
20
25
32
40

Adjustable Stroke

10: 10mm
20: 20mm
30: 30mm
50: 50mm
75: 75mm
100: 100mm

Magnet

S: With magnet
Blank: Without magnet

Piston Rod Material

Blank: Carbon steel
E: Stainless steel

Mountings

Blank: Basic mountings

LB: Front and back mounting

FA: Front mounting flange

FB: Back mounting flange

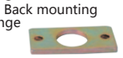

SDB: Back hinge

Sensor

JEL-03R

* Standard wire is 1 meter, please order for other length

Specification

Bore (mm)	08	10	12	16	20	25	32	40
Operation	Double Acting or Single Acting							
Working Medium	Air							
Mountings	Basic LB FA FB SDB							
Operating Pressure	0.1～1.0MPa							
Proof Pressure	1.5 MPa							
Operating Temperature Range	-20～70℃							
Operating Speed Range	50～800mm/s							
Cushion	Gasket Cushion							
Port Size	M5x0.8			G1/8"				

ISO9001:2008 CE

DN Series
Stainless Steel Mini Cylinder
(ISO6432 Standard)

Cylinder
Sizing
SI
SI A.
SIB
SQ
DNT
SC / SU
SCT
SC A.
SL
DN
DSN
DN/DSN A.
MA
MAC
MA/MAC A.
MAL
MALC
MAL/MACL A.
SDA
CQ2
TCQ2
ADN
TADN
PPRM
ZX
MHL2
Pneumatic Fingers
MXH
MXQ
CJP
CJ2
CDU
TN
CXS
MGP
MSQ

Internal Structure

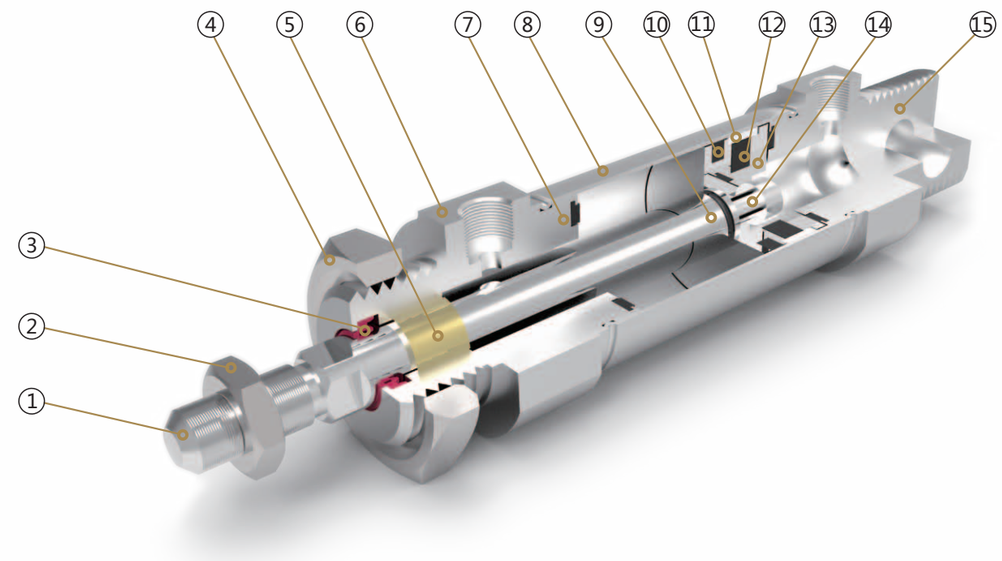

Parts

Number	Name	Number	Name
1	Piston rod	9	O ring
2	Hexagon nut	10	Piston seal
3	Shaft seal	11	Anti-friction seal
4	Hexagon nut	12	Magnet
5	DU bearing	13	Piston
6	Front cover	14	Socket head cap screw
7	Cushion adjusting screw	15	Back cover
8	Barrel		

JELPC® | JELPC — China Pneumatic

Overall Dimension

DN

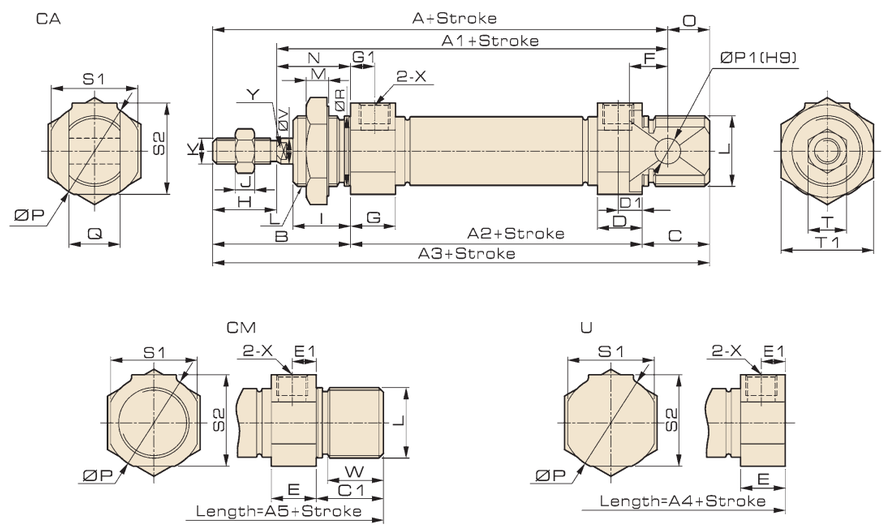

Cylinder with or without magnet is the same size

Dimension

Bore Symbol	A	A1	A2	A3	A4	A5	B	C	C1	D	D1	E	E1	F	G	G1	H	I
8	76	64	46	86	74	86	28	12	12	10	5.5	10	5.5	6	10	5.5	12	12
10	76	64	46	86	74	86	28	12	12	10	5.5	10	5.5	6	10	5.5	12	12
12	91	74	50	105	88	105	38	17	17	10	6	10	6	9	10	6	16	17
16	98	82	55	111	92	111	37	19	19	10.5	6	10.5	6	9	10.5	6	16	16
20	115	95	64	128	107	128	43	21	21	14	7.5	14	7.5	9	14	7.5	20	16
25	126	104	66	137	116	137	50	21	21	15	8	15	8	12	15	8	22	22
32	135	113	72	147	120	132	48	27	12	17	8.5	17	8.5	15	17	8.5	22	18
40	138	115	72	150	123	136	51	27	14	16	8	16	8	15	16	8	23	20

Bore Symbol	J	K	L	M	N	O	P	P1	Q	R	S1	S2	T	T1	X	V	W	Y
8	6	M4×0.7	M12×1.25	6	16	10	17	4	8	12	15	15	7	17	M5×0.8	4	9.3	-
10	6	M4×0.7	M12×1.25	6	16	10	17	4	8	12	15	15	7	17	M5×0.8	4	9.3	-
12	5	M6×1	M16×1.5	6	22	14	21	6	12	16	19	19	10	24	M5×0.8	6	14	5
16	5	M6×1	M16×1.5	6	21	13	21	6	12	16	19	19	10	24	M5×0.8	6	15.5	5
20	6	M8×1.25	M22×1.5	7	23	13	30	8	16	22	27	28.5	12	29	G1/8	8	17.5	6
25	6	M10×1.25	M22×1.5	7	28	11	30	8	16	22	27	28.5	17	29	G1/8	10	17.5	8
32	6	M10×1.25	M27×2	9	26	12	38	10	20	27	35	36.5	17	36	G1/8	12	8	10
40	8	M14×1.5	M33×2	9	28	12	45	10	20	33	42	43.5	22	45	G1/4	16	10	14

ISO9001:2008 CE

DN Series
Stainless Steel Mini Cylinder
(ISO6432 Standard)

Overall Dimension

DS

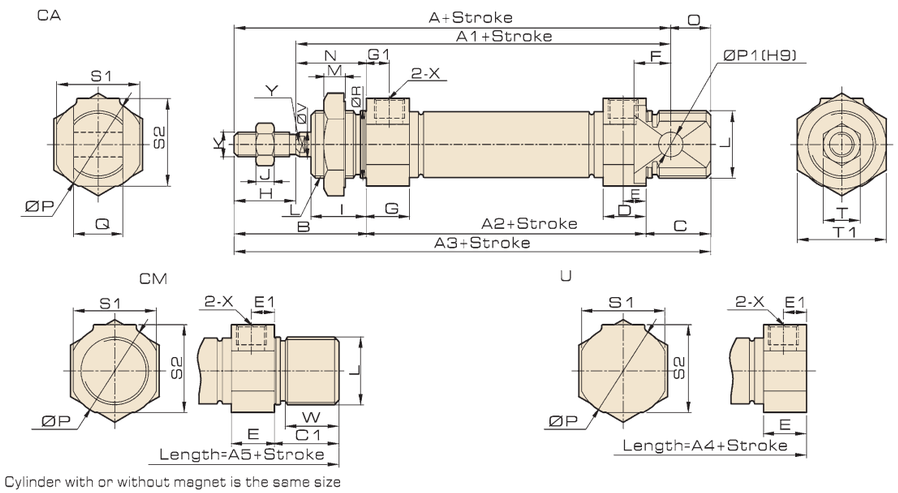

Cylinder with or without magnet is the same size

Dimension

Symbol	A			A1			A2			A3			A4			A5		
Bore/Stroke	0-50	50-100	100-150	0-50	50-100	100-150	0-50	50-100	100-150	0-50	50-100	100-150	0-50	50-100	100-150	0-50	50-100	100-150
8	101	-	-	89	-	-	71	-	-	111	-	-	99	-	-	111	-	-
10	101	-	-	89	-	-	71	-	-	111	-	-	99	-	-	111	-	-
12	116	-	-	99	-	-	75	-	-	130	-	-	113	-	-	130	-	-
16	123	148	-	107	132	-	80	105	-	136	161	-	117	142	-	136	161	-
20	140	165	190	120	145	170	89	114	139	153	178	203	132	157	182	153	178	203
25	151	176	201	129	154	179	91	116	141	162	187	212	141	166	191	162	187	212
32	160	185	210	138	163	188	97	122	147	172	197	222	145	170	195	157	182	207
40	163	188	213	140	165	190	97	122	147	175	200	225	148	173	198	161	186	211

Bore/Symbol	B	C	C1	D	D1	E	E1	F	G	G1	H	I	J	K	L
8	28	12	12	10	5.5	10	5.5	6	10	5.5	12	12	6	M4×0.7	M12×1.25
10	28	12	12	10	5.5	10	5.5	6	10	5.5	12	12	6	M4×0.7	M12×1.25
12	38	17	17	10	6	10	6	9	10	6	16	17	5	M6×1	M16×1.5
16	37	19	19	10.5	6	10.5	6	9	10.5	6	16	16	5	M6×1	M16×1.5
20	43	21	21	14	7.5	14	7.5	9	14	7.5	20	16	6	M8×1.25	M22×1.5
25	50	21	21	15	8	15	8	12	15	8	22	22	6	M10×1.25	M22×1.5
32	48	27	12	17	8.5	17	8.5	15	17	8.5	22	18	6	M10×1.25	M27×2
40	51	27	14	16	8	16	8	15	16	8	23	20	8	M14×1.5	M33×2

Bore/Symbol	M	N	O	P	P1	Q	R	S1	S2	T	T1	X	V	W	Y
8	6	16	10	17	4	8	12	15	15	7	17	M5×0.8	4	9.3	-
10	6	16	10	17	4	8	12	15	15	7	17	M5×0.8	4	9.3	-
12	6	22	14	21	6	12	16	19	19	10	24	M5×0.8	6	14	5
16	6	21	13	21	6	12	16	19	19	10	24	M5×0.8	6	15.5	5
20	7	23	13	30	8	16	22	27	28.5	12	29	G1/8	8	17.5	6
25	7	28	11	30	8	16	22	27	28.5	17	29	G1/8	10	17.5	8
32	9	26	12	38	10	20	27	35	36.5	17	36	G1/8	12	8	10
40	9	28	12	45	10	20	33	42	43.5	22	45	G1/4	16	10	14

Cylinder
Sizing
SI
SI A.
SIB
SQ
DNT
SC / SU
SCT
SC A.
SL
DN
DSN
DN/DSN A.
MA
MAC
MA/MAC A.
MAL
MALC
MAL/MACL A.
SDA
CQ2
TCQ2
ADN
TADN
PPRM
ZX
MHL2
Pneumatic Fingers
MXH
MXQ
CJP
CJ2
CDU
TN
CXS
MGP
MSQ

JELPC® | JELPC — China Pneumatic

ISO9001:2008 CE

Overall Dimension

DT

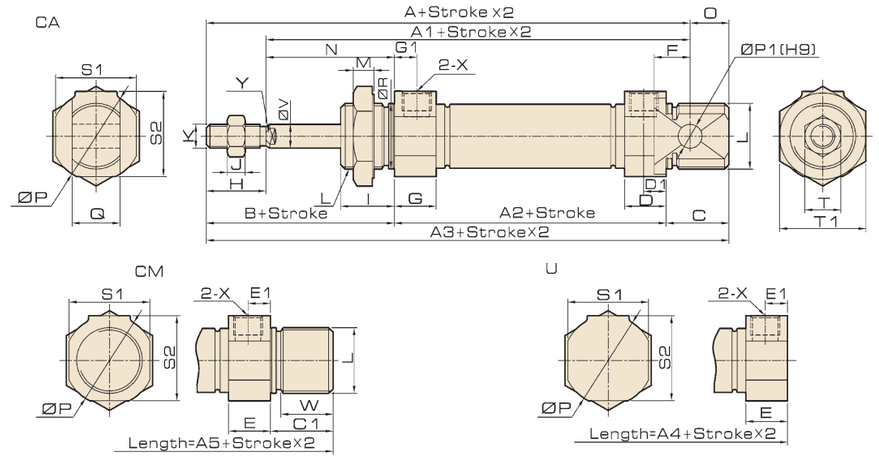

Cylinder with or without magnet is the same size

Dimension

Symbol	A			A1			A2			A3			A4			A5		
Bore/Stroke	0-50	50-100	100-150	0-50	50-100	100-150	0-50	50-100	100-150	0-50	50-100	100-150	0-50	50-100	100-150	0-50	50-100	100-150
8	101	-	-	89	-	-	71	-	-	111	-	-	99	-	-	111	-	-
10	101	-	-	89	-	-	71	-	-	111	-	-	99	-	-	111	-	-
12	116	-	-	99	-	-	75	-	-	130	-	-	113	-	-	130	-	-
16	123	148	-	107	132	-	80	105	-	136	161	-	117	142	-	136	161	-
20	140	165	190	120	145	170	89	114	139	153	178	203	132	157	182	153	178	203
25	151	176	201	129	154	179	91	116	141	162	187	212	141	166	191	162	187	212
32	160	185	210	138	163	188	97	122	147	172	197	222	145	170	195	157	182	207
40	163	188	213	140	165	190	97	122	147	175	200	225	148	173	198	161	186	211

Bore Symbol	B	C	C1	D	D1	E	E1	F	G	G1	H	I	J	K	L
8	28	12	12	10	5.5	10	5.5	6	10	5.5	12	12	6	M4×0.7	M12×1.25
10	28	12	12	10	5.5	10	5.5	6	10	5.5	12	12	6	M4×0.7	M12×1.25
12	38	17	17	10	6	10	6	9	10	6	16	17	5	M6×1	M16×1.5
16	37	19	19	10.5	6	10.5	6	9	10.5	6	16	16	5	M6×1	M16×1.5
20	43	21	21	14	7.5	14	7.5	9	14	7.5	20	16	6	M8×1.25	M22×1.5
25	50	21	21	15	8	15	8	12	15	8	22	22	6	M10×1.25	M22×1.5
32	48	27	12	17	8.5	17	8.5	15	17	8.5	22	18	6	M10×1.25	M27×2
40	51	27	14	16	8	16	8	15	16	8	23	20	8	M14×1.5	M33×2

Bore Symbol	M	N	O	P	P1	Q	R	S1	S2	T	T1	X	V	W	Y
8	6	16	10	17	4	8	12	15	15	7	17	M5×0.8	4	9.3	-
10	6	16	10	17	4	8	12	15	15	7	17	M5×0.8	4	9.3	-
12	6	22	14	21	6	12	16	19	19	10	24	M5×0.8	6	14	5
16	6	21	13	21	6	12	16	19	19	10	24	M5×0.8	6	15.5	5
20	7	23	13	30	8	16	22	27	28.5	12	29	G1/8	8	17.5	6
25	7	28	11	30	8	16	22	27	28.5	17	29	G1/8	10	17.5	8
32	9	26	12	38	10	20	27	35	36.5	17	36	G1/8	12	8	10
40	9	28	12	45	10	20	33	42	43.5	22	45	G1/4	16	10	14

Overall Dimension

DND

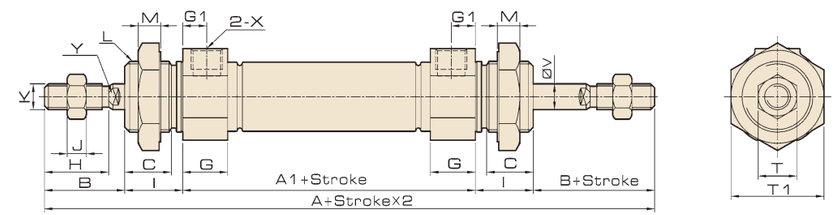

Cylinder with or without magnet is the same size

DNJ

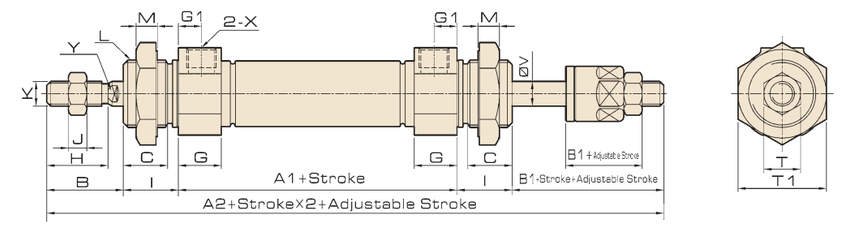

Cylinder with or without magnet is the same size

Dimension

Bore Symbol	A	A1	A2	B	B1	C	D	G	G1	H	I	J	K	L	M	T	T1	V	X
8	102	46	100.5	16	14.5	9.3	-	10	5.5	12	12	6	M4×0.7	M12×1.25	6	7	17	4	M5×0.8
10	102	46	100.5	16	14.5	9.3	-	10	5.5	12	12	6	M4×0.7	M12×1.25	6	7	17	4	M5×0.8
12	126	50	126	21	21	14	5	10	6	16	17	5	M6×1	M16×1.5	6	10	24	6	M5×0.8
16	129	55	129	21	21	13	5	10.5	6	16	16	5	M6×1	M16×1.5	6	10	24	6	M5×0.8
20	150	64	150	27	25	14.5	6	14	7.5	20	16	6	M8×1.25	M22×1.5	7	12	29	8	G1/8
25	166	66	165	28	27	18.5	8	15	8	22	22	6	M10×1.25	M22×1.5	7	17	29	10	G1/8
32	168	72	165	30	27	14	10	17	8.5	22	18	6	M10×1.25	M27×2	9	17	36	12	G1/8
40	174	72	172	31	29	16	14	16	8	23	20	8	M14×1.5	M33×2	9	22	45	16	G1/4

Cylinder
Sizing
SI
SI A.
SIB
SQ
DNT
SC / SU
SCT
SC A.
SL
DN
DSN
DN/DSN A.
MA
MAC
MA/MAC A.
MAL
MALC
MAL/MACL A.
SDA
CQ2
TCQ2
ADN
TADN
PPRM
ZX
MHL2
Pneumatic Fingers
MXH
MXQ
CJP
CJ2
CDU
TN
CXS
MGP
MSQ

JELPC® | JELPC — China Pneumatic

Features

1. Improving for adapting wide range applications,using precise polishing of piston rod, more sense of products quality and longer life of front seal.
2. Optima design and improve the production efficiency.
3. Combined with enterprise color planning and new structure design, stainless steel series cylinder integrated as the semicircular groove cramping.
4. Change processing technology of cylinder cushion structure to ensure buffering function in stabilization.
5. Improved the range of buffering fine-tune, enable customers to more easily adjust the buffer throttling speed.

DSN25X75

Ordering Code

DSN	-	U	-	32	x	50	-	10	-	S	-	E	-	LB	-	MT
Series		Back Form		Bore		Stroke		Adjustable Stroke		Magnet		Piston Rod Material		Mountings		Sensor

Series

DSN: Double Acting

DSND: Double-shaft

DSNJ: Double-shaft with adjustable stroke

Back Form

Blank: Standard with eye mounting

CM: Standard with round back cover

U: Standard with flat back cover

Bore

16
20
25
32
40

Adjustable Stroke

10: 10mm
20: 20mm
30: 30mm
50: 50mm
75: 75mm
100: 100mm

Magnet

S: With magnet
Blank: Without magnet

Piston Rod Material

Blank: Carbon steel
E: Stainless steel

Mountings

Blank: Basic mountings
LB: Front and back mounting

FA: Front mounting flange
FB: Back mounting flange

SDB: Back hinge

Sensor

JEL-03R

* Standard wire is 1 meter, please order for other length

Specification

Bore (mm)	16	20	25	32	40
Operation	Double Acting				
Working Medium	Air				
Mountings	Basic LB FA FB SDB				
Operating Pressure Range	0.1～1.0MPa				
Proof Pressure	1.5 MPa				
Operating Temperature Range	-20～70℃				
Operating Speed Range	50～800mm/s				
Cushion	Adjustable Air Cushion				
Port Size	M5X0.8	G1/8"			

ISO9001:2008 CE

DSN Series
Stainless Steel Mini Cylinder
(ISO6432 Standard)

Cylinder
Sizing
SI
SI A.
SIB
SQ
DNT
SC / SU
SCT
SC A.
SL
DN
DSN
DN/DSN A.
MA
MAC
MA/MAC A.
MAL
MALC
MAL/MACL A.
SDA
CQ2
TCQ2
ADN
TADN
PPRM
ZX
MHL2
Pneumatic Fingers
MXH
MXQ
CJP
CJ2
CDU
TN
CXS
MGP
MSQ

Internal Structure

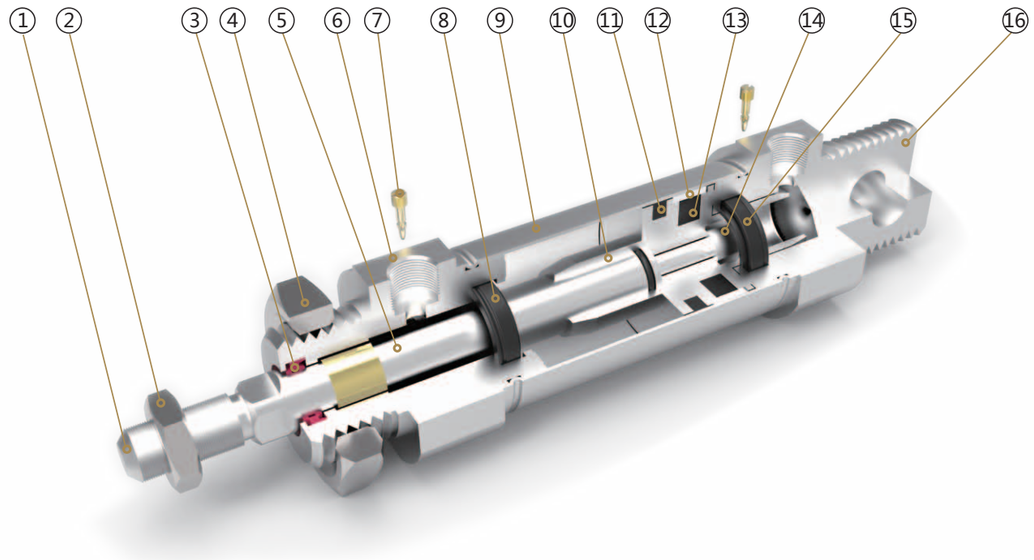

Parts

Number	Name	Number	Name
1	Piston rod	9	Barrel
2	Hexagon nut	10	Piston
3	Shaft seal	11	Piston seal
4	Hexagon nut	12	Anti-friction seal
5	DU bearing	13	Magnet
6	Front cover	14	Socket head cap screw
7	Cushion adjusting screw	15	Cushion
8	Cushion	16	Back cover

JELPC®
JELPC
— China Pneumatic

Overall Dimension

DSN

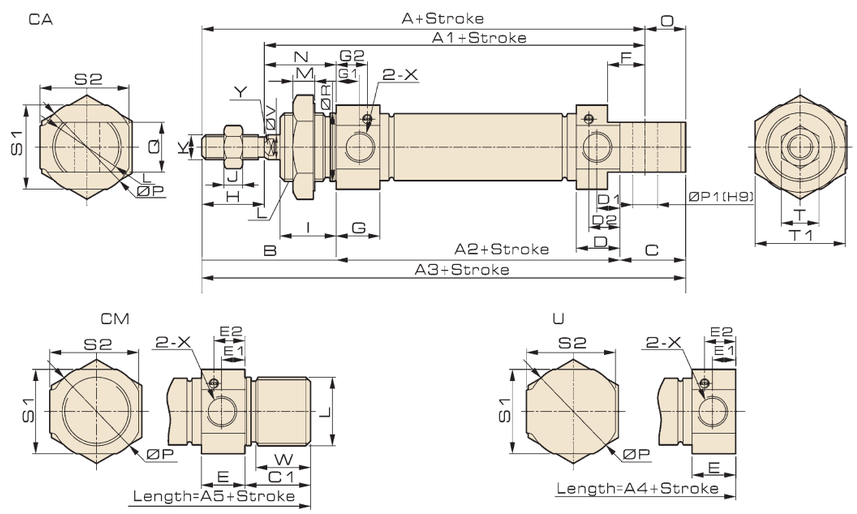

Cylinder with or without magnet is the same size

Dimension

Bore Symbol	A	A1	A2	A3	A4	A5	B	C	C1	D	D1	D2	E	E1	E2	F	G	G1	G2	H	I
16	98	82	55	111	92	111	37	19	19	10.5	6	7	10.5	6	7	9	10.5	6	7	16	16
20	115	95	64	128	107	128	43	21	21	14	7.5	10	14	7.5	10	9	14	7.5	10	20	18
25	126	104	66	137	116	137	50	21	21	15	8	10.5	15	8	10.5	12	15	8	10.5	22	22
32	135	113	72	147	120	132	48	27	12	17	8.5	12	17	8.5	12	15	17	8.5	12	22	18
40	138	115	72	150	123	136	51	27	14	16	8	11.5	16	8	11.5	15	16	8	11.5	23	20

Bore Symbol	J	K	L	M	N	O	P	P1	Q	R	S1	S2	T	T1	X	V	W	Y
16	5	M6×1	M16×1.5	6	21	13	21	6	12	16	19	19	10	24	M5×0.8	6	15.5	5
20	6	M8×1.25	M22×1.5	7	23	13	30	8	16	22	27	28.5	12	29	G1/8	8	17.5	6
25	6	M10×1.25	M22×1.5	7	28	11	30	8	16	22	27	28.5	17	29	G1/8	10	17.5	8
32	6	M10×1.25	M27×2	9	26	12	38	10	20	27	35	36.5	17	36	G1/8	12	8	10
40	8	M14×1.5	M33×2	9	28	12	45	10	20	33	42	43.5	22	45	G1/4	16	10	14

ISO9001:2008 CE

DSN Series
Stainless Steel Mini Cylinder
(ISO6432 Standard)

Cylinder
Sizing
SI
SI A.
SIB
SQ
DNT
SC / SU
SCT
SC A.
SL
DN
DSN
DN/DSN A.
MA
MAC
MA/MAC A.
MAL
MALC
MAL/MACL A.
SDA
CQ2
TCQ2
ADN
TADN
PPRM
ZX
MHL2
Pneumatic Fingers
MXH
MXQ
CJP
CJ2
CDU
TN
CXS
MGP
MSQ

Overall Dimension

DSND

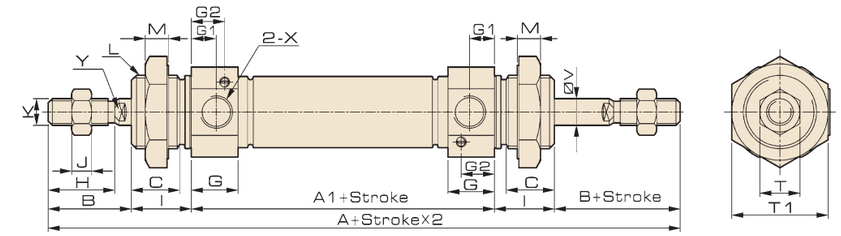

Cylinder with or without magnet is the same size

DSNJ

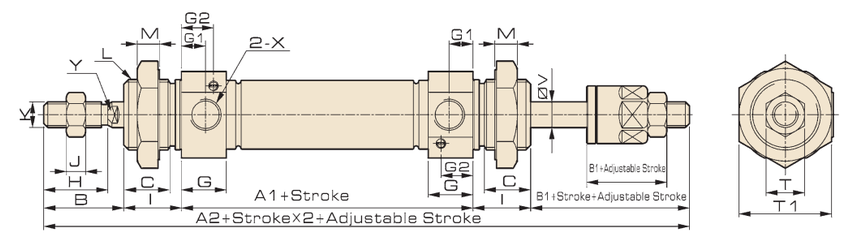

Cylinder with or without magnet is the same size

Dimension

Bore Symbol	A	A1	A2	B	B1	C	D	G	G1	G2	H	I	J	K	L	M	T	T1	V	X
16	129	55	129	21	21	13	5	10.5	6	7	16	16	5	M6×1	M16×1.5	6	10	24	6	M5×0.8
20	150	64	150	27	25	14.5	6	14	7.5	10	20	16	6	M8×1.25	M22×1.5	7	12	29	8	G1/8
25	166	66	165	28	27	18.5	8	15	8	10.5	22	22	6	M10×1.25	M22×1.5	7	17	29	10	G1/8
32	168	72	165	30	27	14	10	17	8.5	12	22	18	6	M10×1.25	M27×2	9	17	36	12	G1/8
40	174	72	172	31	29	16	14	16	8	11.5	23	20	8	M14×1.5	M33×2	9	22	45	16	G1/4

JELPC® | JELPC — China Pneumatic

ISO9001:2008 CE

Overall Dimension

FA

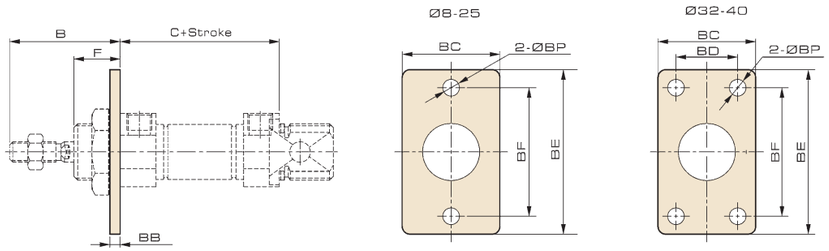

Dimension

Symbol / Bore Stroke	B	C (DN, DSN Series)	C (DS/DT Series) 0-50	50-100	100-150	BB	BC	BD	BE	BF	BP	F
8	28	46	71	-	-	3	22	-	40	30	4.5	12
10	28	46	71	-	-	3	22	-	40	30	4.5	12
12	38	50	75	-	-	4	30	-	52	40	5.5	17
16	37	55	80	105	-	4	30	-	52	40	5.5	16
20	43	64	89	114	139	5	40	-	66	50	6.6	16
25	50	66	91	116	141	5	40	-	66	50	6.6	22
32	48	72	97	122	147	5	45	20	80	60	7	18
40	51	72	97	122	147	5	50	30	100	80	9	20

Overall Dimension

LB

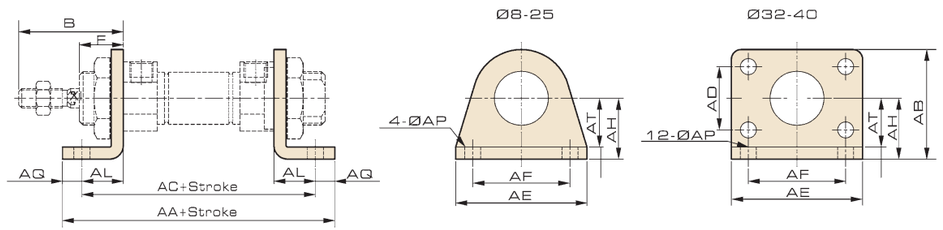

Dimension

Symbol / Bore Stroke	B	AA (DN、DSN Series)	AA (DS/DT Series) 0-50	50-100	100-150	AB	AC (DN、DSN Series)	AC (DS/DT Series) 0-50	50-100	100-150	AD	AE	AF	AH	AL	AP	AQ	AT	F
8	28	78	103	-	-	-	68	93	-	-	-	35	25	16	11	4.5	5	3	12
10	28	78	103	-	-	-	68	93	-	-	-	35	25	16	11	4.5	5	3	12
12	38	90	115	-	-	-	78	103	-	-	-	42	32	20	14	5.5	6	4	17
16	37	95	120	145	-	-	83	108	133	-	-	42	32	20	14	5.5	6	4	16
20	43	114	139	164	189	-	98	123	148	173	-	54	40	25	17	6.6	8	5	16
25	50	116	141	166	191	-	100	125	150	175	-	54	40	25	17	6.6	8	5	22
32	48	118	143	168	193	49	104	129	154	179	28	66	52	28	16	7	7	5	18
40	51	132	157	182	207	58	112	137	162	187	30	80	60	33	20	9	10	5	20

Overall Dimension

SDB

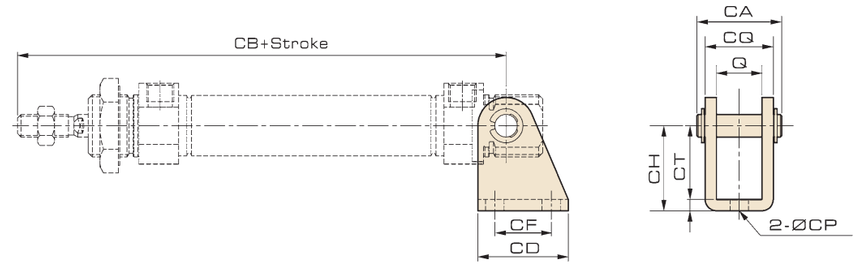

Dimension

Symbol / Bore Stroke	D	Q	CA	CB (MAL Series)	CB (MSAL/MTAL Series) 0-50	50-100	100-150	CD	CF	CH	CT	CP	CQ
8	11.3	8.1	17.3	76	101	-	-	20	12.5	24	2.5	4.5	13.1
10	11.3	8.1	17.3	76	101	-	-	20	12.5	24	2.5	4.5	13.1
12	13	12.1	23.3	91	116	-	-	25	15	27	3	5.5	18.1
16	13	12.1	23.3	98	123	148	-	25	15	27	3	5.5	18.1
20	16	16.1	30	115	140	165	190	32	20	30	4	6.5	24.1
25	16	16.1	30	126	151	176	201	32	20	30	4	6.5	24.1
32	19.5	20.1	34.6	135	160	185	210	41	24	35	4	9	28.1
40	26	20.1	36.6	138	163	188	213	52	30	40	5	9	30.1

Overall Dimension

Dimension

I Knuckle

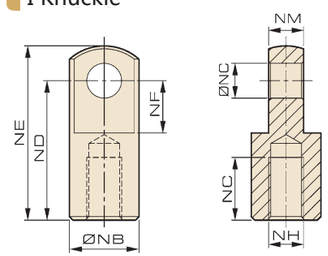

	NB	NC	ND	NE	NF	NG	NH	NM	Bore	8	10	12	16	20	25	32	40
II-M04070	10	4	16	21	7	6	M4×0.7	4	Adapted fitting form	√	√						
II-M06100	12	5	21	28	8.5	8	M6×1	6				√	√				
II-M08125	16	8	30	40	11	15	M8×1.25	8						√			
II-M10125	20	10	40	50	15	18	M10×1.25	10							√	√	
II-M12125	24	12	48	62	24	18	M12×1.25	12									
II-M14150	28	14	56	72	28	21	M14×1.5	14									√

CK Knuckle

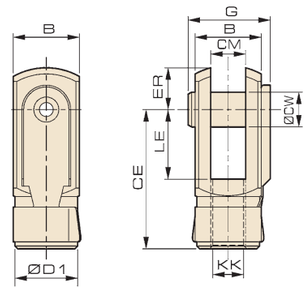

	B	CE	CM	CR	CW	D1	ER	G	LE	KK	
CK-M04070	8	16	4	22	4	7	6	11	8	M4×0.7	DSN8、DSN10
CK-M06100	12	24	6	31	6	10	7	15	12	M6×1	DSN12、DSN16
CK-M08125	16	32	8	42	8	14	10	20	16	M8×1.25	DSN20
CK-M10125	19	40	10	52	10	18	12	24	20	M10×1.25	DSN25、DSN32
CK-M12125	24	48	12	62	12	20	14	30	24	M12×1.25	
CK-M14150	28	56	14	72	14	25	16	30	28	M14×1.5	DSN40
CK-M16150	32	64	16	83	16	30	19		32	M16×1.5	
CK-M20150	40	80	20	105	20	39	25		40	M20×1.5	

JELPC® | JELPC — China Pneumatic

Features

1. Improving for adapting wide range applications,using precise polishing of piston rod, more sense of products quality and longer life of front seal.
2. Optima design and improve the production efficiency.
3. Combined with enterprise color planning and new structure design,stainless steel series cylinder integrated as the semicircular groove cramping.
4. Using embedded gasket , increase the pressured area of pistons after collision.

MA16X100

Ordering Code

MA	-	U	-	32	x	50	-	10	-	S	-	E	-	LB	-	MT
Series		Back Form		Bore		Stroke		Adjustable Stroke		Magnet		Piston Rod Material		Mountings		Sensor

Series
- MA: Double Acting
- MSA: Single Acting Spring-out
- MTA: Single Acting Spring-in
- MAD: Double-shaft
- MAJ: Double-shaft with adjustable stroke

Back Form
- Blank: Standard with eye mounting
- CM: Standard with round back cover
- U: Standard with flat back cover

Bore: 12, 16, 20, 25, 32, 40

Stroke

Adjustable Stroke
- 10: 10mm
- 20: 20mm
- 30: 30mm
- 50: 50mm
- 75: 75mm
- 100: 100mm

Magnet
- S: With magnet
- Blank: Without magnet

Piston Rod Material
- Blank: Carbon steel
- E: Stainless steel

Mountings
- Blank: Basic mountings
- LB: Front and back mounting
- FA: Front mounting flange
- FB: Back mounting flange
- SDB: Back hinge

Sensor
- JEL-03R

* Standard wire is 1 meter, please order for other length

Specification

Bore (mm)	12	16	20	25	32	40
Operation	Double Acting or Single Acting					
Working Medium	Air					
Mountings	Basic LB FA FB SDB					
Operating Pressure Range	0.1～1.0MPa					
Proof Pressure	1.5 MPa					
Operating Temperature Range	-20～70℃					
Operating Speed Range	50～800mm/s					
Cushion	Gasket Cushion					
Port Size	M5×0.8		G1/8"			

ISO9001:2008 CE

MA Series
Stainless Steel Mini Cylinder

Cylinder
Sizing
SI
SI A.
SIB
SQ
DNT
SC / SU
SCT
SC A.
SL
DN
DSN
DN/DSN A.
MA
MAC
MA/MAC A.
MAL
MALC
MAL/MACL A.
SDA
CQ2
TCQ2
ADN
TADN
PPRM
ZX
MHL2
Pneumatic Fingers
MXH
MXQ
CJP
CJ2
CDU
TN
CXS
MGP
MSQ

Internal Structure

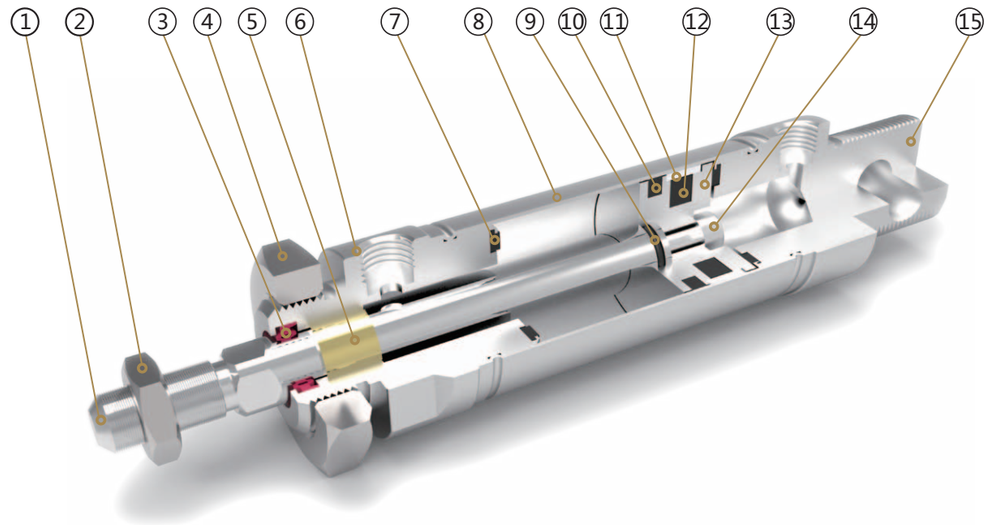

Parts

Number	Name	Number	Name
1	Piston rod	9	O ring
2	Hexagon nut	10	Piston seal
3	Shaft seal	11	Anti-friction seal
4	Hexagon nut	12	Magnet
5	DU bearing	13	Piston
6	Front cover	14	Socket head cap screw
7	Anti-collision gasket	15	Back cover
8	Barrel		

JELPC® | JELPC — China Pneumatic

Overall Dimension

MA

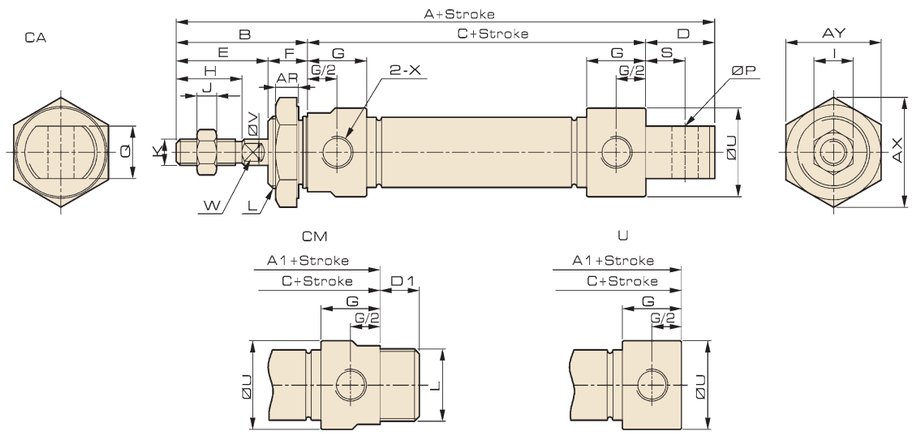

Cylinder with or without magnet is the same size

Dimension

Bore / Stroke	A	A1	B	C	D	D1	E	F	G	H	I	J	K
12	113	97	38	59	16	12	22	16	12	16	10	5	M6×1
16	114	98	38	60	16	12	22	16	12	16	10	5	M6×1
20	137	116	40	76	21	12	28	12	18	20	12	6	M8×1.25
25	141	120	44	76	21	14	30	14	16	22	17	6	M10×1.25
32	147	120	44	76	27	14	30	14	16	22	17	6	M10×1.25
40	150	123	46	77	27	14	32	14	16.7	24	19	7	M12×1.25

Bore / Stroke	L	P	Q	S	U	V	W	X	AR	AX	AY
12	M16×1.5	6	12	9.5	21	6	5	M5×0.8	6	27.8	24
16	M16×1.5	6	12	9	21	6	5	M5×0.8	6	27.8	24
20	M22×1.5	8	16	12	27	8	6	G1/8	7	33.5	29
25	M22×1.5	8	16	12	30	10	8	G1/8	7	33.5	29
32	M24×2	10	16	15	35	12	10	G1/8	9	37	32
40	M30×2	12	20	15	42	16	14	G1/4	9	46	40

ISO9001:2008 CE

Overall Dimension

MSA

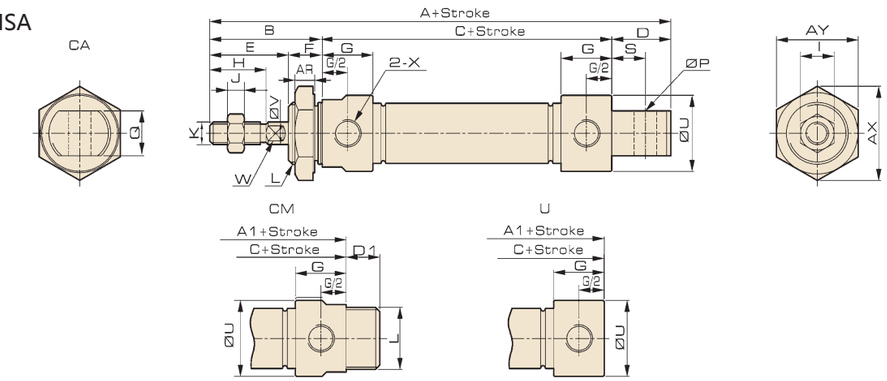

Cylinder with or without magnet is the same size

MTA

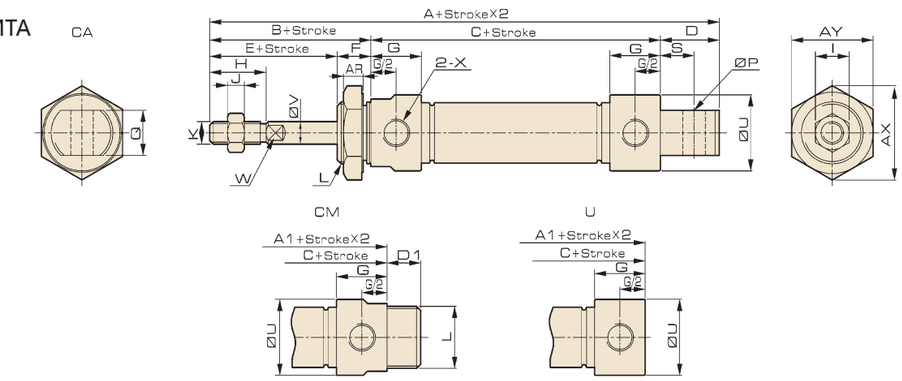

Cylinder with or without magnet is the same size

Dimension

Symbol	A			A1			B	C			D	D1	E	F	G
Bore/Stroke	0-50	50-100	100-150	0-50	50-100	100-150		0-50	50-100	100-150					
12	138	-	-	122	-	-	38	84	-	-	16	12	22	16	12
16	139	164	-	123	148	-	38	85	110	-	16	12	22	16	12
20	162	187	212	141	166	191	40	101	126	151	21	12	28	12	18
25	166	191	216	145	170	195	44	101	126	151	21	14	30	14	16
32	172	197	222	145	170	195	44	101	126	151	27	14	30	14	16
40	175	200	225	148	173	198	46	102	127	152	27	14	32	14	16.7

Bore/Symbol	H	I	J	K	L	P	Q	S	U	V	W	X	AR	AX	AY
12	16	10	5	M6×1	M16×1.5	6	12	9.5	21	6	5	M5×0.8	6	27.8	24
16	16	10	5	M6×1	M16×1.5	6	12	9	21	6	5	M5×0.8	6	27.8	24
20	20	12	6	M8×1.25	M22×1.5	8	16	12	27	8	6	G1/8	7	33.5	29
25	22	17	6	M10×1.25	M22×1.5	8	16	12	30	10	8	G1/8	7	33.5	29
32	22	17	6	M10×1.25	M24×2	10	16	15	35	12	10	G1/8	9	37	32
40	24	19	7	M12×1.25	M30×2	12	20	15	42	16	14	G1/4	9	46	40

Cylinder
Sizing
SI
SI A.
SIB
SQ
DNT
SC / SU
SCT
SC A.
SL
DN
DSN
DN/DSN A.
MA
MAC
MA/MAC A.
MAL
MALC
MAL/MACL A.
SDA
CQ2
TCQ2
ADN
TADN
PPRM
ZX
MHL2
Pneumatic Fingers
MXH
MXQ
CJP
CJ2
CDU
TN
CXS
MGP
MSQ

JELPC® | JELPC — China Pneumatic

ISO9001:2008 CE

Cylinder
Sizing
SI
SI A.
SIB
SQ
DNT
SC / SU
SCT
SC A.
SL
DN
DSN
DN/DSN A.
MA
MAC
MA/MAC A.
MAL
MALC
MAL/MACL A.
SDA
CQ2
TCQ2
ADN
TADN
PPRM
ZX
MHL2
Pneumatic Fingers
MXH
MXQ
CJP
CJ2
CDU
TN
CXS
MGP
MSQ

Overall Dimension

MAD

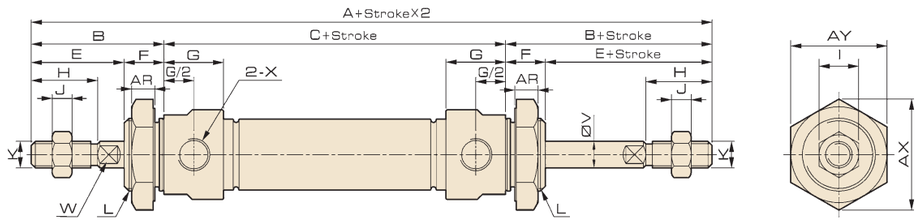

Cylinder with or without magnet is the same size

MAJ

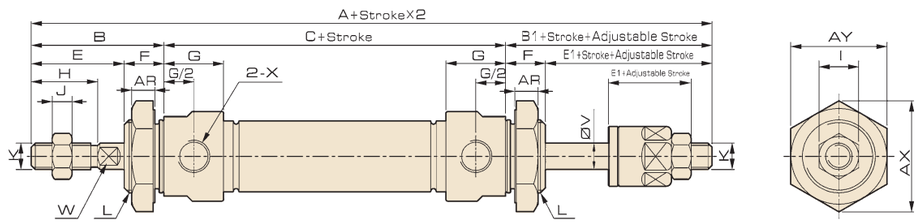

Cylinder with or without magnet is the same size

Dimension

Bore Symbol	A	A1	B	B1	C	E	E1	F	G	H	I	J	K	L	U	V	W	X	AR	AX	AY	Y
12	135	135	38	38	59	22	21	16	12	16	10	5	M6×1	M16×1.5	21	6	5	M5×0.8	6	27.8	24	6
16	136	135	38	37	60	22	21	16	12	16	10	5	M6×1	M16×1.5	21	6	5	M5×0.8	6	27.8	24	6
20	156	153	40	37	76	28	25	12	18	20	12	6	M8×1.25	M22×1.5	27	8	6	G1/8	7	33.5	29	8.5
25	164	161	44	41	76	30	27	14	16	22	17	6	M10×1.25	M22×1.5	30	10	8	G1/8	7	33.5	29	9.5
32	164	161	44	41	76	30	27	14	16	22	17	6	M10×1.25	M24×2	35	12	10	G1/8	9	37	32	11.5
40	169	166	46	42	77	32	28	14	16.7	24	19	7	M12×1.25	M30×2	42	16	14	G1/8	9	46	40	14

Features

1. Improving for adapting wide range applications,using precise polishing of piston rod, more sense of products quality and longer life of front seal.
2. Optima design and improve the production efficiency.
3. Combined with enterprise color planning and new structure design,stainless steel series cylinder integrated as the semicircular groove cramping.
4. Change processing technology of cylinder cushion structure to ensure buffering function in stabilization.
5. Improved the range of buffering fine-tune, enable customers to more easily adjust the buffer throttling speed.

Ordering Code

MAC - U - 32 x 50 - 10 - S - E - LB - MT

Series
- MAC: Double Acting
- MACD: Double-shaft
- MACJ: Double-shaft with adjustable stroke

Back Form
- Blank: Standard with eye mounting
- CM: Standard with round back cover
- U: Standard with flat back cover

Bore: 16, 20, 25, 32, 40

Stroke

Adjustable Stroke: 10: 10mm; 20: 20mm; 30: 30mm; 50: 50mm; 75: 75mm; 100: 100mm

Magnet
- S: With magnet
- Blank: Without magnet

Piston Rod Material
- Blank: Carbon steel
- E: Stainless steel

Mountings
- Blank: Basic mountings
- LB: Front and back mounting
- FA: Front mounting flange
- FB: Back mounting flange
- SDB: Back hinge

Sensor
- JEL-03R

* Standard wire is 1 meter, please order for other length

Specification

Bore (mm)	16	20	25	32	40
Operation	Double Acting				
Working Medium	Air				
Mountings	Basic LB FA FB SDB				
Operating Pressure Range	0.1～1.0MPa				
Proof Pressure	1.5 MPa				
Operating Temperature Range	-20～70℃				
Operating Speed Range	50～800mm/s				
Cushion	Adjustable Air Cushion				
Port Size	M5X0.8	G1/8"			

Cylinder
Sizing
SI
SI A.
SIB
SQ
DNT
SC / SU
SCT
SC A.
SL
DN
DSN
DN/DSN A.
MA
MAC
MA/MAC A.
MAL
MALC
MAL/MACL A.
SDA
CQ2
TCQ2
ADN
TADN
PPRM
ZX
MHL2
Pneumatic Fingers
MXH
MXQ
CJP
CJ2
CDU
TN
CXS
MGP
MSQ

Internal Structure

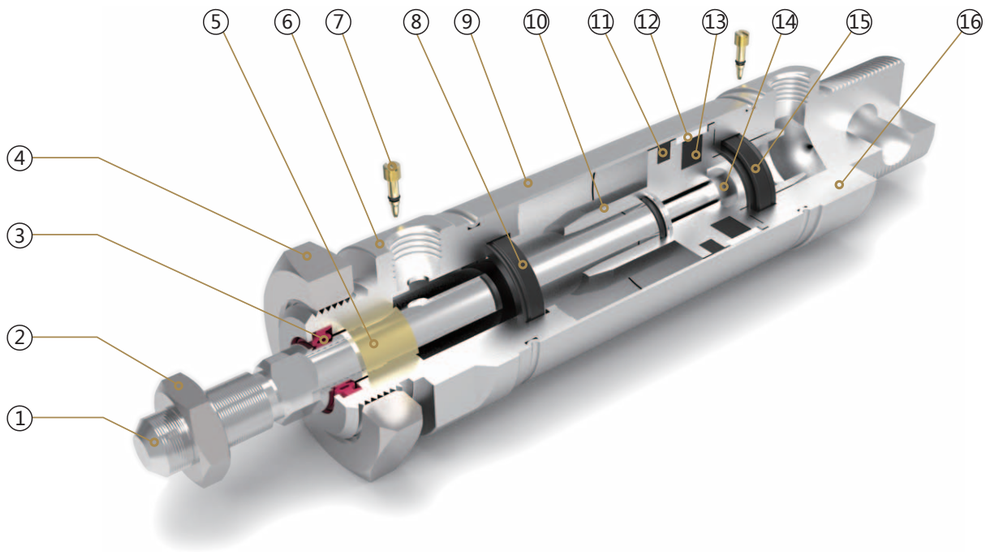

Parts

Number	Name	Number	Name
1	Piston rod	9	Barrel
2	Hexagon nut	10	Piston
3	Shaft seal	11	Piston seal
4	Hexagon nut	12	Anti-friction seal
5	DU bearing	13	Magnet
6	Front cover	14	Socket head cap screw
7	Cushion adjusting screw	15	Cushion
8	Cushion	16	Back cover

Overall Dimension

MAC

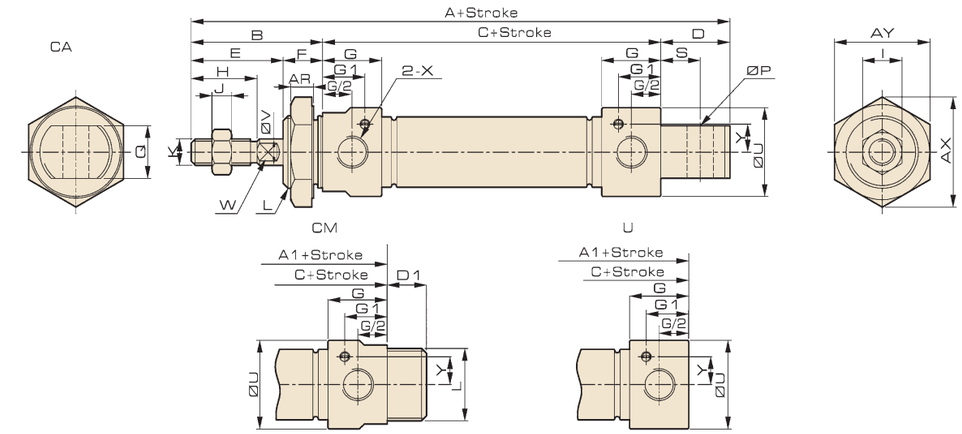

Cylinder with or without magnet is the same size

Dimension

Bore/Symbol	A	A1	B	C	D	D1	E	F	G	G1	H	I	J	K
16	114	98	38	60	16	12	22	16	12	8	16	10	5	M6×1
20	137	116	40	76	21	12	28	12	18	13	20	12	6	M8×1.25
25	141	120	44	76	21	14	30	14	16	11	22	17	6	M10×1.25
32	147	120	44	76	27	14	30	14	16	11.5	22	17	6	M10×1.25
40	150	123	46	77	27	14	32	14	16.7	12	24	19	7	M12×1.25

Bore/Symbol	L	P	Q	S	U	V	W	X	AR	AX	AY	Y
16	M16×1.5	6	12	9	21	6	5	M5×0.8	6	27.8	24	6
20	M22×1.5	8	16	12	27	8	6	G1/8	7	33.5	29	8.5
25	M22×1.5	8	16	12	30	10	8	G1/8	7	33.5	29	9.5
32	M24×2	10	16	15	35	12	10	G1/8	9	37	32	11.5
40	M30×2	12	20	15	42	16	14	G1/8	9	46	40	14

Cylinder
Sizing
SI
SI A.
SIB
SQ
DNT
SC / SU
SCT
SC A.
SL
DN
DSN
DN/DSN A.
MA
MAC
MA/MAC A.
MAL
MALC
MAL/MACL A.
SDA
CQ2
TCQ2
ADN
TADN
PPRM
ZX
MHL2
Pneumatic Fingers
MXH
MXQ
CJP
CJ2
CDU
TN
CXS
MGP
MSQ

Cylinder
Sizing
SI
SI A.
SIB
SQ
DNT
SC / SU
SCT
SC A.
SL
DN
DSN
DN/DSN A.
MA
MAC
MA/MAC A.
MAL
MALC
MAL/MACL A.
SDA
CQ2
TCQ2
ADN
TADN
PPRM
ZX
MHL2
Pneumatic Fingers
MXH
MXQ
CJP
CJ2
CDU
TN
CXS
MGP
MSQ

Overall Dimension

MACD

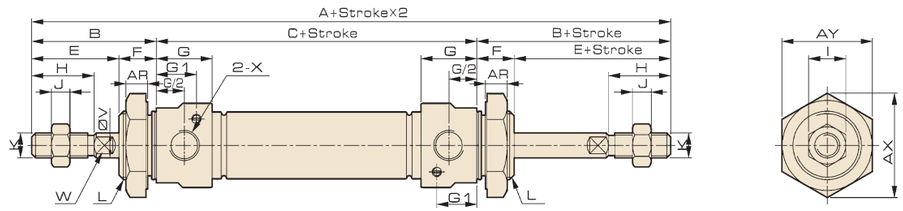

Cylinder with or without magnet is the same size

MACJ

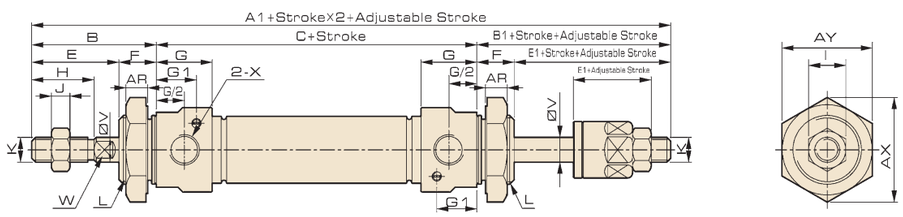

Cylinder with or without magnet is the same size

Dimension

Bore/ Symbol	A	A1	B	B1	C	E	E1	F	G	G1	H	I	J	K	L	U	V	W	X	AR	AX	AY	Y
16	136	135	38	37	60	22	21	16	12	8	16	10	5	M6×1	M16×1.5	21	6	5	M5×0.8	6	27.8	24	6
20	156	153	40	37	76	28	25	12	18	13	20	12	6	M8×1.25	M22×1.5	27	8	6	G1/8	7	33.5	29	8.5
25	164	161	44	41	76	30	27	14	16	11	22	17	6	M10×1.25	M22×1.5	30	10	8	G1/8	7	33.5	29	9.5
32	164	161	44	41	76	30	27	14	16	11.5	22	17	6	M10×1.25	M24×2	35	12	10	G1/8	9	37	32	11.5
40	169	166	46	42	77	32	28	14	16.7	12	24	19	7	M12×1.25	M30×2	42	16	14	G1/8	9	46	40	14

Overall Dimension

FA

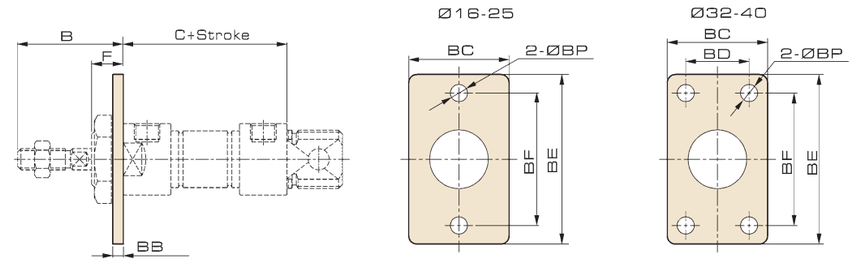

Dimension

Symbol / Bore/ Stroke	B	C (MA Series)	C (MSA/MTA Series) 0-50	50-100	100-150	BB	BC	BD	BE	BF	BP	F
16	38	60	85	110	-	3	26	-	52	40	5.5	16
20	40	76	101	126	151	4	38	-	64	50	6.5	12
25	44	76	101	126	151	4	38	-	64	50	6.5	14
32	44	76	101	126	151	4	47	33	72	58	6.5	14
40	46	77	102	127	152	4	50	36	84	70	6.5	14

Overall Dimension

LB

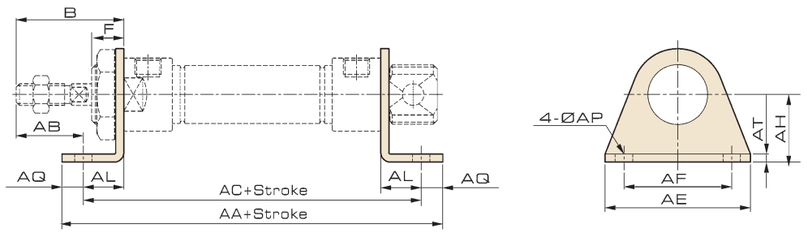

Dimension

Symbol / Bore/ Stroke	B	AA (MA Series)	AA (MSA/MTA Series) 0-50	50-100	100-150	AB	AC (MAL Series)	AC (MSAL/MTAL Series) 0-50	50-100	100-150	AE	AF	AH	AL	AP	AQ	AT	F
16	38	98	123	148	-	25	86	111	136	-	44	32	20	13	5.5	6	3	16
20	40	122	147	172	197	25	106	131	156	181	54	40	25	15	6.5	8	3	12
25	44	122	147	172	197	29	106	131	156	181	54	40	25	15	6.5	8	3	14
32	44	142	167	192	217	19	126	151	176	201	59	45	32	25	6.5	8	4	14
40	46	143	168	193	218	21	127	152	177	202	64	50	36	25	6.5	8	4	14

Overall Dimension

SDB

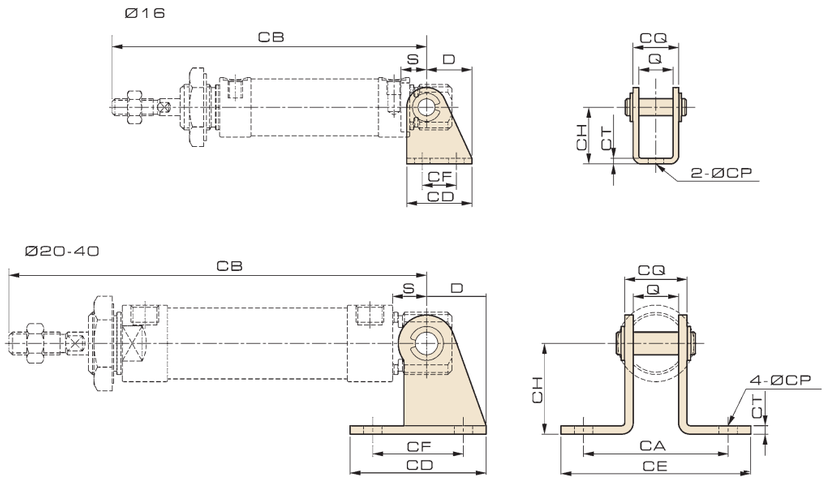

Dimension

Symbol Bore/ Stroke	D	S	Q	CA	CB (MA Series)	CB (MSA/MTA Series) 0-50	50-100	100-150	CD	CE	CF	CH	CT	CP	CQ
16	16	9	12	-	107	132	157	-	23	-	12	20	2	5.5	16
20	21	12	16	51	128	153	178	203	48	67	32	32	3	6.5	22
25	21	12	16	51	132	157	182	207	48	67	32	32	3	6.5	22
32	27	15	16	51	135	160	185	210	52	67	36	36	4	6.5	24
40	27	15	20	55	138	163	188	213	56	71	40	40	4	6.5	28

Overall Dimension

I Knuckle

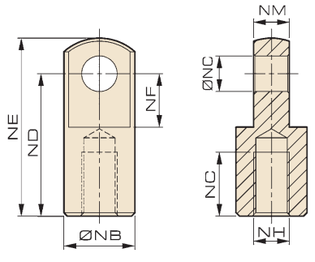

Dimension

	NB	NC	ND	NE	NF	NG	NH	NM	Bore	16	20	25	32	40
II-M04070	10	4	16	21	7	6	M4×0.7	4	Adapted fitting form					
II-M06100	12	5	21	28	8.5	8	M6×1	6		√				
II-M08125	16	8	30	40	11	15	M8×1.25	8			√			
II-M10125	20	10	40	50	15	18	M10×1.25	10				√	√	
II-M12125	24	12	48	62	24	18	M12×1.25	12						√

Cylinder
Sizing
SI
SI A.
SIB
SQ
DNT
SC / SU
SCT
SC A.
SL
DN
DSN
DN/DSN A.
MA
MAC
MA/MAC A.
MAL
MALC
MAL/MACL A.
SDA
CQ2
TCQ2
ADN
TADN
PPRM
ZX
MHL2
Pneumatic Fingers
MXH
MXQ
CJP
CJ2
CDU
TN
CXS
MGP
MSQ

Features

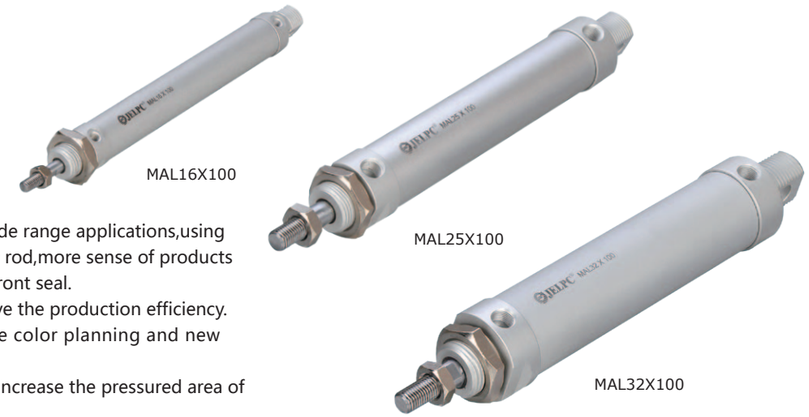

1. Improving for adapting wide range applications,using precise polishing of piston rod,more sense of products quality and longer life of front seal.
2. Optima design and improve the production efficiency.
3. Combined with enterprise color planning and new structure design.
4. Using embedded gasket , increase the pressured area of pistons after collision.

Ordering Code

MAL - U - 32 x 50 - 10 - S - E - LB - MT

Series
- MAL: Double Acting
- MSAL: Single Acting Spring-out
- MTAL: Single Acting Spring-in
- MALD: Double-shaft
- MALJ: Double-shaft with adjustable stroke

Back Form
- Blank: Standard with eye mounting
- CM: Standard with round back cover
- U: Standard with flat back cover

Bore
16, 20, 25, 32, 40

Stroke

Adjustable Stroke
10: 10mm, 20: 20mm, 30: 30mm, 50: 50mm, 75: 75mm, 100: 100mm

Magnet
- S: With magnet
- Blank: Without magnet

Piston Rod Material
- Blank: Carbon steel
- E: Stainless steel

Mountings
- Blank: Basic mountings
- LB: Front and back mounting
- FA: Front mounting flange
- FB: Back mounting flange
- SDB: Back hinge

Sensor
- JEL-03R

* Standard wire is 1 meter, please order for other length

Specification

Bore (mm)	16	20	25	32	40
Operation	Double Acting or Single Acting				
Working Medium	Air				
Mountings	Basic LB FA FB SDB				
Operating Pressure Range	0.1 ~ 1.0MPa				
Proof Pressure	1.5 MPa				
Operating Temperature Range	-20 ~ 70℃				
Operating Speed Range	50 ~ 800mm/s				
Cushion	Gasket Cushion				
Port Size	M5×0.8	G1/8"			G1/4"

Internal Structure

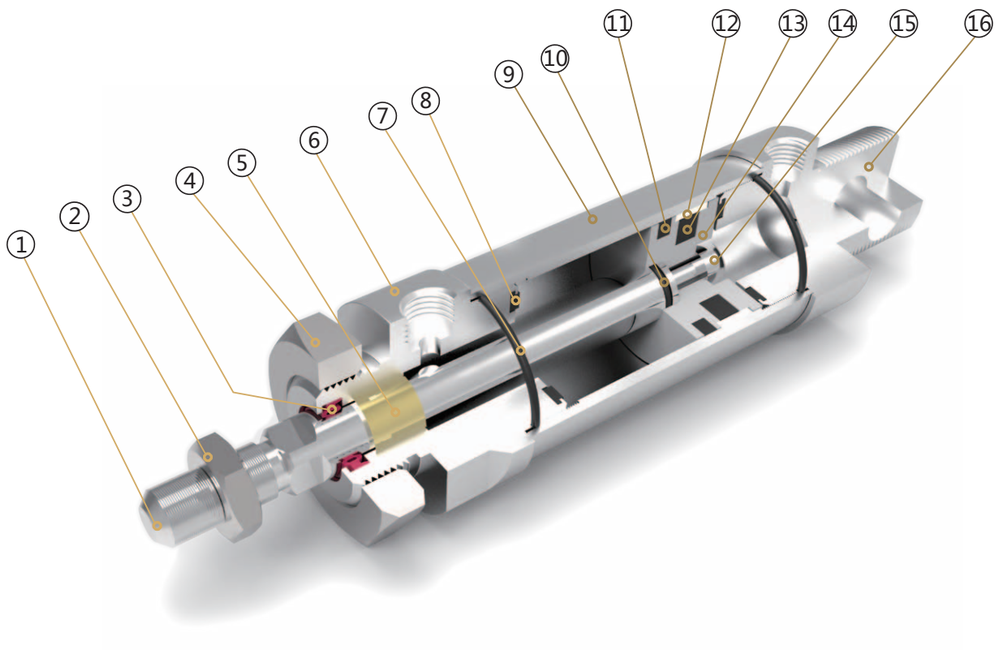

Parts

Number	Name	Number	Name
1	Piston rod	9	Barrel
2	Hexagon nut	10	O ring
3	Shaft seal	11	Piston seal
4	Hexagon nut	12	Anti-friction seal
5	DU bearing	13	Magnet
6	Front cover	14	Piston
7	O ring	15	Socket head cap screw
8	Anti-collision gasket	16	Back cover

MAL Series
Aluminum Alloy Mini Cylinder

Overall Dimension

MAL

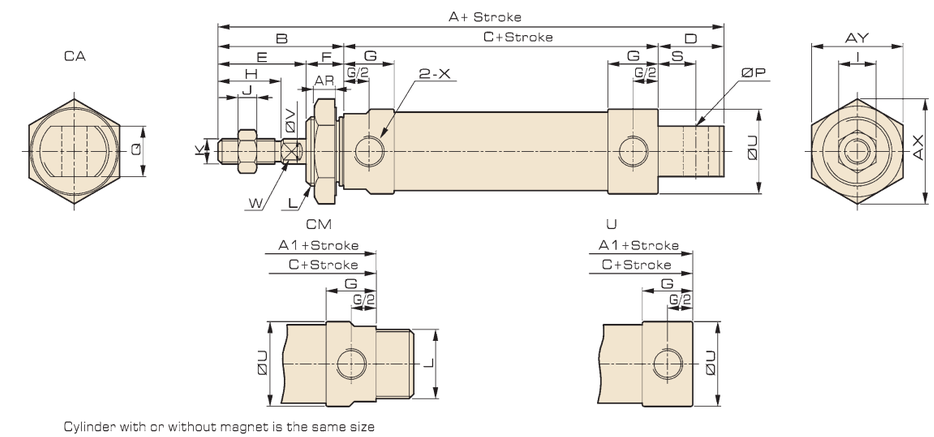

Cylinder with or without magnet is the same size

Dimension

Bore/ Symbol	A	A1	B	C	D	D1	E	F	G	G1	H	I	J	K
16	105	90	38	52	15	12	24	14	11	6.5	16	10	5	M6×1
20	131	110	40	70	21	12	28	12	16	12	20	12	6	M8×1.25
25	135	114	44	70	21	14	30	14	16	11	22	17	6	M10×1.25
32	141	114	44	70	27	14	30	14	16	11.5	22	17	6	M10×1.25
40	165	138	46	92	27	14	32	14	22	15	24	19	7	M12×1.25

Bore/ Symbol	L	P	Q	S	U	V	W	X	AR	AX	AY	Y
16	M16×1.5	6	12	6	21	6	5	M5×0.8	6	27.8	24	6
20	M22×1.5	8	16	12	27	8	6	G1/8	7	33.5	29	9
25	M22×1.5	8	16	12	32	10	8	G1/8	7	33.5	29	9
32	M24×2	10	16	15	39.5	12	10	G1/8	9	37	32	11.5
40	M30×2	12	20	15	47	16	14	G1/4	9	46	40	14

Cylinder
Sizing
SI
SI A.
SIB
SQ
DNT
SC / SU
SCT
SC A.
SL
DN
DSN
DN/DSN A.
MA
MAC
MA/MAC A.
MAL
MALC
MAL/MACL A.
SDA
CQ2
TCQ2
ADN
TADN
PPRM
ZX
MHL2
Pneumatic Fingers
MXH
MXQ
CJP
CJ2
CDU
TN
CXS
MGP
MSQ

JELPC® | JELPC — China Pneumatic

Overall Dimension

MSAL

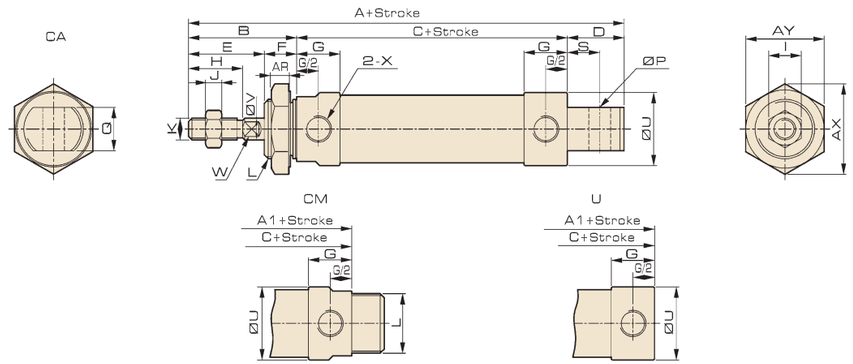

Cylinder with or without magnet is the same size

MTAL

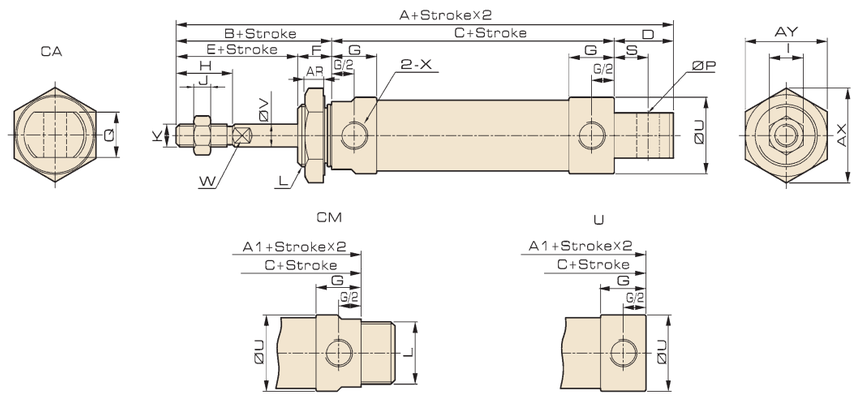

Cylinder with or without magnet is the same size

Dimension

Symbol	A			A1			B	C			D	D1	E	F	G
Bore/Stroke	0-50	50-100	100-150	0-50	50-100	100-150		0-50	50-100	100-150					
16	130	155	-	115	140	-	38	77	102	-	15	12	24	14	11
20	156	181	206	135	160	185	40	95	120	145	21	12	28	12	16
25	160	185	210	139	164	189	44	95	120	145	21	14	30	14	16
32	166	191	216	139	164	189	44	95	120	145	27	14	30	14	16
40	190	215	240	163	188	213	46	117	142	167	27	14	32	14	22

Bore/Stroke	H	I	J	K	L	P	Q	S	U	V	W	X	AR	AX	AY
16	16	10	5	M6×1	M16×1.5	6	12	6	21	6	5	M5×0.8	6	27.8	24
20	20	12	6	M8×1.25	M22×1.5	8	16	12	27	8	6	G1/8	7	33.5	29
25	22	17	6	M10×1.25	M22×1.5	8	16	12	32	10	8	G1/8	7	33.5	29
32	22	17	6	M10×1.25	M24×2	10	16	15	39.5	12	10	G1/8	9	37	32
40	24	19	7	M12×1.25	M30×2	12	20	15	47	16	14	G1/4	9	46	40

ISO9001:2008 CE

Overall Dimension

MALD

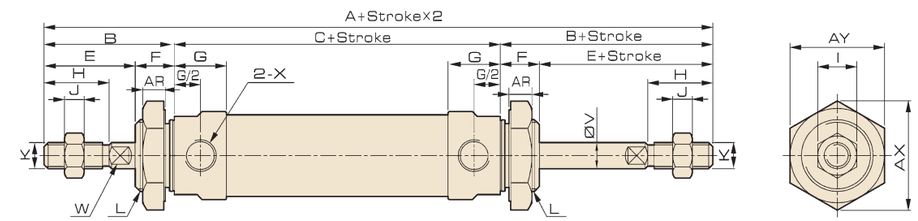

Cylinder with or without magnet is the same size

MALJ

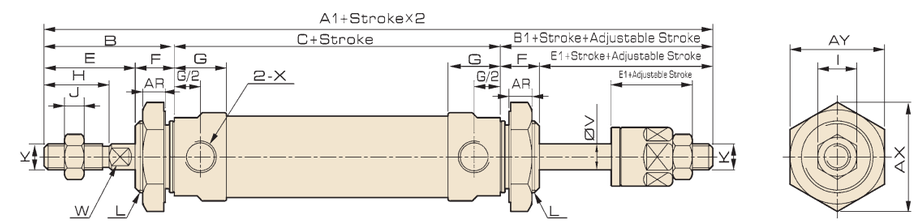

Cylinder with or without magnet is the same size

Dimension

Bore/Stroke	A	A1	B	B1	C	E	E1	F	G	G1	H	I	J	K	L	U	V	W	X	AR	AX	AY	Y
16	128	125	38	35	52	24	21	14	11	6.5	16	10	5	M6×1	M16×1.5	21	6	5	M5×0.8	6	27.8	24	6
20	150	147	40	37	70	28	25	12	16	12	20	12	6	M8×1.25	M22×1.5	27	8	6	G1/8	7	33.5	29	9
25	158	155	44	41	70	30	27	14	16	11	22	17	6	M10×1.25	M22×1.5	32	10	8	G1/8	7	33.5	29	9
32	158	155	44	41	70	30	27	14	16	11.5	22	17	6	M10×1.25	M24×2	39.5	12	10	G1/8	9	37	32	11.5
40	184	180	46	42	92	32	28	14	22	15	24	19	7	M12×1.25	M30×2	47	16	14	G1/4	9	46	40	14

JELPC® | JELPC — China Pneumatic

Features

1. Improving for adapting wide range applications, using precise polishing of piston rod, more sense of products quality and longer life of front seal.
2. Optima design and improve the production efficiency.
3. Combined with enterprise color planning and new structure design.
4. Change processing technology of cylinder cushion structure to ensure buffering function in stabilization.
5. Improved the range of buffering fine-tune, enable customers to more easily adjust the buffer throttling speed.

Ordering Code

MALC	-	U	-	32	x	50	-	10	-	S	-	E	-	LB	-	MT
Series		Back Form		Bore		Stroke		Adjustable Stroke		Magnet		Piston Rod Material		Mountings		Sensor
MALC: Double Acting		Blank: Standard with eye mounting		16				10: 10mm		S: With magnet		Blank: Carbon steel		Blank: Basic mountings		JEL-03R
MALCD: Double-shaft		CM: Standard with round back cover		20				20: 20mm		Blank: Without magnet		E: Stainless steel		LB: Front and back mounting		* Standard wire is 1 meter, please order for other length
MALCJ: Double-shaft with adjustable stroke		U: Standard with flat back cover		25				30: 30mm						FA: Front mounting flange FB: Back mounting flange		
				32				50: 50mm						SDB: Back hinge		
				40				75: 75mm								
								100: 100mm								

Specification

Bore (mm)	16	20	25	32	40
Operation	Double Acting				
Working Medium	Air				
Mountings	Basic LB FA FB SDB				
Operating Pressure Range	0.1 ~ 1.0MPa				
Proof Pressure	1.5 MPa				
Operating Temperature Range	-20 ~ 70℃				
Operating Speed Range	50 ~ 800mm/s				
Cushion	Adjustable Air Cushion				
Port Size	M5×0.8	G1/8"			G1/4"

ISO9001:2008 CE

MALC Series
Aluminum Alloy Mini Cylinder

Cylinder
Sizing
SI
SI A.
SIB
SQ
DNT
SC / SU
SCT
SC A.
SL
DN
DSN
DN/DSN A.
MA
MAC
MA/MAC A.
MAL
MALC
MAL/MACL A.
SDA
CQ2
TCQ2
ADN
TADN
PPRM
ZX
MHL2
Pneumatic Fingers
MXH
MXQ
CJP
CJ2
CDU
TN
CXS
MGP
MSQ

Internal Structure

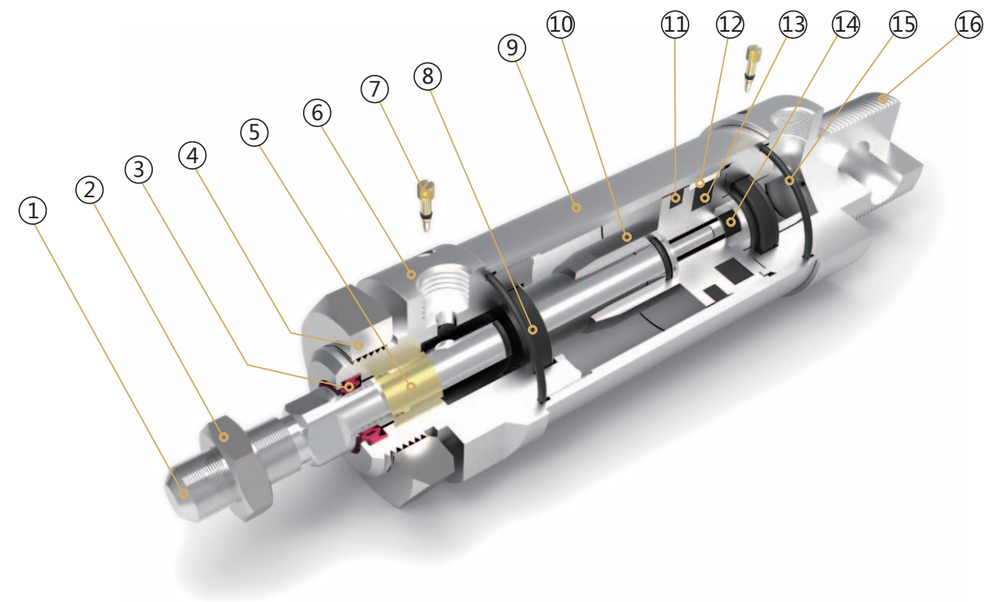

Parts

Number	Name	Number	Name
1	Piston rod	9	Barrel
2	Hexagon nut	10	Piston
3	Shaft seal	11	Piston seal
4	Hexagon nut	12	Anti-friction seal
5	DU bearing	13	Magnet
6	Front cover	14	Screw
7	Cushion adjusting screw	15	O ring
8	Cushion	16	Back cover

JELPC® | JELPC — China Pneumatic

Overall Dimension

MALC

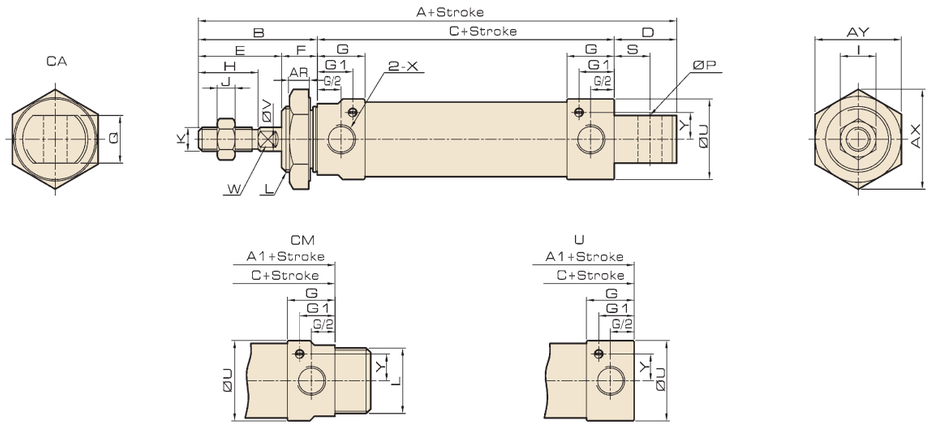

Cylinder with or without magnet is the same size

Dimension

Bore/Stroke	A	A1	B	C	D	D1	E	F	G	G1	H	I	J	K
16	105	90	38	52	15	12	24	14	11	6.5	16	10	5	M6×1
20	131	110	40	70	21	12	28	12	16	12	20	12	6	M8×1.25
25	135	114	44	70	21	14	30	14	16	11	22	17	6	M10×1.25
32	141	114	44	70	27	14	30	14	16	11.5	22	17	6	M10×1.25
40	165	138	46	92	27	14	32	14	22	15	24	19	7	M12×1.25

Bore/Stroke	L	P	Q	S	U	V	W	X	AR	AX	AY	Y
16	M16×1.5	6	12	6	21	6	5	M5×0.8	6	27.8	24	6
20	M22×1.5	8	16	12	27	8	6	G1/8	7	33.5	29	9
25	M22×1.5	8	16	12	32	10	8	G1/8	7	33.5	29	9
32	M24×2	10	16	15	39.5	12	10	G1/8	9	37	32	11.5
40	M30×2	12	20	15	47	16	14	G1/4	9	46	40	14

ISO9001:2008 CE

MALC Series
Aluminum Alloy Mini Cylinder

Overall Dimension

MALCD

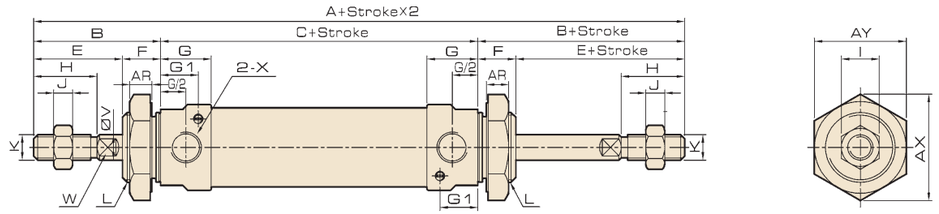

Cylinder with or without magnet is the same size

MALCJ

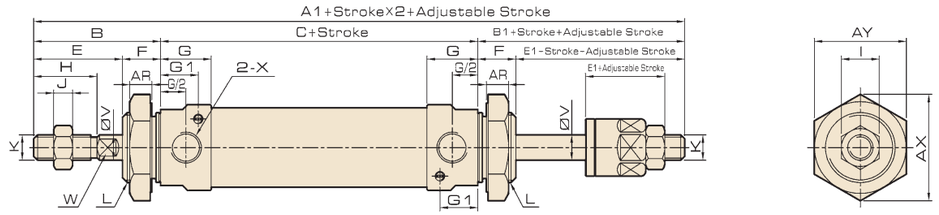

Cylinder with or without magnet is the same size

Dimension

Bore/ Stroke	A	A1	B	B1	C	E	E1	F	G	G1	H	I	J	K	L	U	V	W	X	AR	AX	AY	Y
16	128	125	38	35	52	24	21	14	11	6.5	16	10	5	M6×1	M16×1.5	21	6	5	M5×0.8	6	27.8	24	6
20	150	147	40	37	70	28	25	12	16	12	20	12	6	M8×1.25	M22×1.5	27	8	6	G1/8	7	33.5	29	9
25	158	155	44	41	70	30	27	14	16	11	22	17	6	M10×1.25	M22×1.5	32	10	8	G1/8	7	33.5	29	9
32	158	155	44	41	70	30	27	14	16	11.5	22	17	6	M10×1.25	M24×2	39.5	12	10	G1/8	9	37	32	11.5
40	184	180	46	42	92	32	28	14	22	15	24	19	7	M12×1.25	M30×2	47	16	14	G1/4	9	46	40	14

Cylinder
Sizing
SI
SI A.
SIB
SQ
DNT
SC / SU
SCT
SC A.
SL
DN
DSN
DN/DSN A.
MA
MAC
MA/MAC A.
MAL
MALC
MAL/MACL A.
SDA
CQ2
TCQ2
ADN
TADN
PPRM
ZX
MHL2
Pneumatic Fingers
MXH
MXQ
CJP
CJ2
CDU
TN
CXS
MGP
MSQ

Overall Dimension

FA

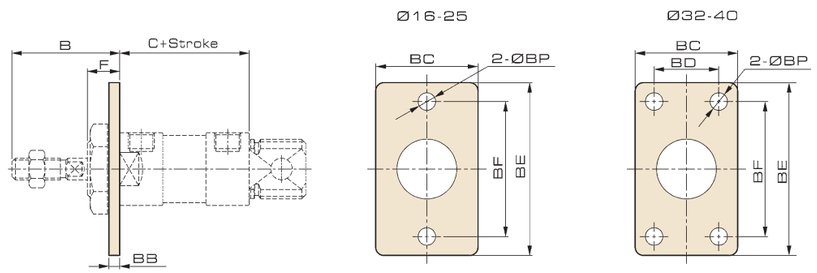

Dimension

Symbol / Bore/Stroke	B	C (MAL Series)	C (MSAL/MTAL Series) 0-50	50-100	100-150	BB	BC	BD	BE	BF	BP	F
16	38	52	77	102	-	3	26	-	52	40	5.5	14
20	40	70	95	120	145	4	38	-	64	50	6.5	12
25	44	70	95	120	145	4	38	-	64	50	6.5	14
32	44	70	95	120	145	4	47	33	72	58	6.5	14
40	46	92	117	142	167	4	50	36	84	70	6.5	14

Overall Dimension

LB

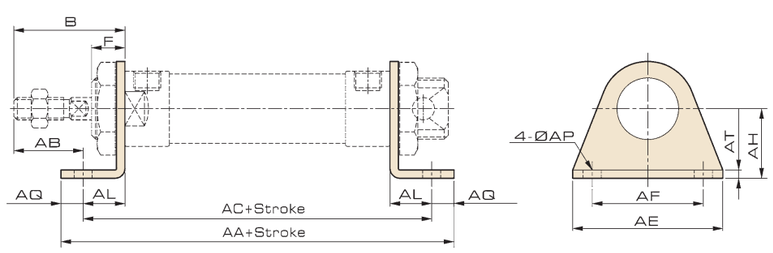

Dimension

Symbol / Bore/Stroke	B	AA (MAL Series)	AA (MSAL/MTAL Series) 0-50	50-100	100-150	AB	AC (MAL Series)	AC (MSAL/MTAL Series) 0-50	50-100	100-150	AE	AF	AH	AL	AP	AQ	AT	F
16	38	90	115	140	-	25	78	103	128	-	44	32	20	13	5.5	6	3	14
20	40	116	141	166	191	25	100	125	150	175	54	40	25	15	6.5	8	3	12
25	44	116	141	166	191	29	100	125	150	175	54	40	25	15	6.5	8	3	14
32	44	136	161	186	211	19	120	145	170	195	59	45	32	25	6.5	8	4	14
40	46	158	183	208	233	21	142	167	192	217	64	50	36	25	6.5	8	4	14

MAL / MALC
Mini Cylinder Accessory

Overall Dimension

SDB

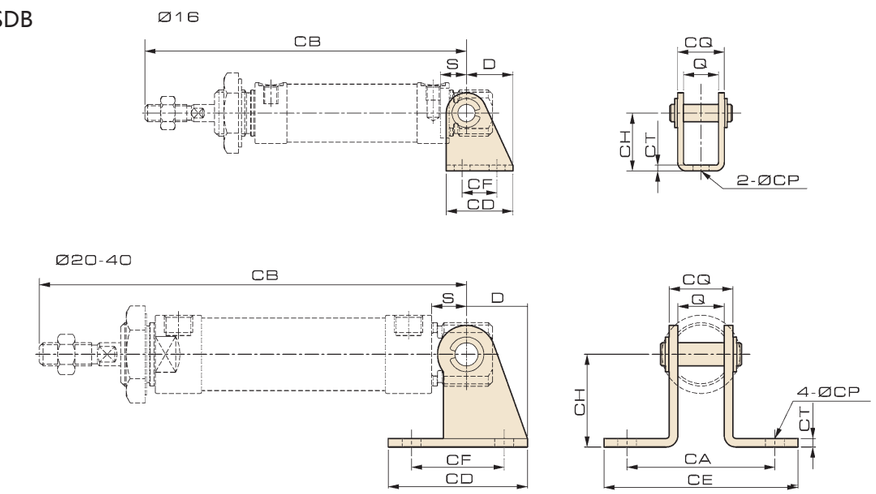

Dimension

Symbol / Bore/Stroke	D	S	Q	CA	CB (MAL Series)	CB (MSAL/MTAL Series) 0-50	50-100	100-150	CD	CE	CF	CH	CT	CP	CQ
16	16	9	12	-	96	121	146	–	23	–	12	20	2	5.5	16
20	21	12	16	51	122	147	172	197	48	67	32	32	3	6.5	22
25	21	12	16	51	126	151	176	201	48	67	32	32	3	6.5	22
32	27	15	16	51	129	154	179	204	52	67	36	36	4	6.5	24
40	27	15	20	55	153	178	203	228	56	71	40	40	4	6.5	28

Overall Dimension

I Knuckle

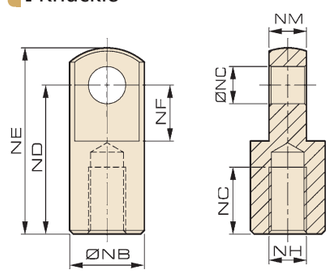

Dimension

	NB	NC	ND	NE	NF	NG	NH	NM	Bore	16	20	25	32	40
II-M04070	10	4	16	21	7	6	M4×0.7	4	Adapted fitting form					
II-M06100	12	5	21	28	8.5	8	M6×1	6		√				
II-M08125	16	8	30	40	11	15	M8×1.25	8			√			
II-M10125	20	10	40	50	15	18	M10×1.25	10				√	√	
II-M12125	24	12	48	62	24	18	M12×1.25	12						√

Cylinder
Sizing
SI
SI A.
SIB
SQ
DNT
SC / SU
SCT
SC A.
SL
DN
DSN
DN/DSN A.
MA
MAC
MA/MAC A.
MAL
MALC
MAL/MALC A.
SDA
CQ2
TCQ2
ADN
TADN
PPRM
ZX
MHL2
Pneumatic Fingers
MXH
MXQ
CJP
CJ2
CDU
TN
CXS
MGP
MSQ

JELPC — China Pneumatic

Features

1. Improving for adapting wide range applications,using precise polishing of piston rod, more sense of products quality and longer life of front seal.
2. Adjust the structure to the optimal state, and ensure the smooth operation of the product.
3. The piston rod and the back cover cramping technology, improving product quality.
4. Combined with enterprise color planning, it is redesigned by new color system and precise treatment of particulars.

The back cover cramping

SDA32X5

SDA16X30

SDA50X60-B

SDA25X60-B

SDA50X60

Ordering Code

SDA	-	20	x	30	-	10	-	S	-	B	-	MT
Series		Bore		Stroke		Adjustable Stroke		Magnet		Thread Type		Sensor

Series
- SDA: Double acting
- SSA: Single acting, spring-out
- STA: Single acting, spring-in
- SDAD: Double-shaft type
- SDAJ：Double-shaft with adjustable stroke

Bore: 12 16 / 20 25 / 32 40 / 50 63 / 80 100

Stroke: 5-130mm

Adjustable Stroke: 10: 10mm / 20: 20mm / 30: 30mm / 50: 50mm / 75: 75mm / 100: 100mm

Magnet: S：With magnet / Blank：Without magnet

Thread Type: Blank: Female thread / B: Male thread / N: No thread

Sensor: JEL-01R / JEL-11R

* Standard wire is 1 meter, please order for other length

Specification

Bore (mm)		12	16	20	25	32	40	50	63	80	100
Operation		Double Acting									
		Single Acting Spring-out / Single Acting Spring-in								-	
Working Medium		Air									
Operating Pressure Range	Double Acting	0.1～1.0MPa									
	Single Acting	0.2～0.9MPa								-	
Proof Pressure		1.5 MPa									
Operating Temperature Range		-20～70 ℃									
Operating Speed Range	Double Acting	30～500 mm/s					30～350 mm/s		30～250 mm/s		
	Single Acting	50～500 mm/s								-	
Port Size		M5×0.8				G1/8"		G1/4"		G3/8"	

ISO9001:2008 CE

SDA Series
Compact Cylinder

Internal Structure

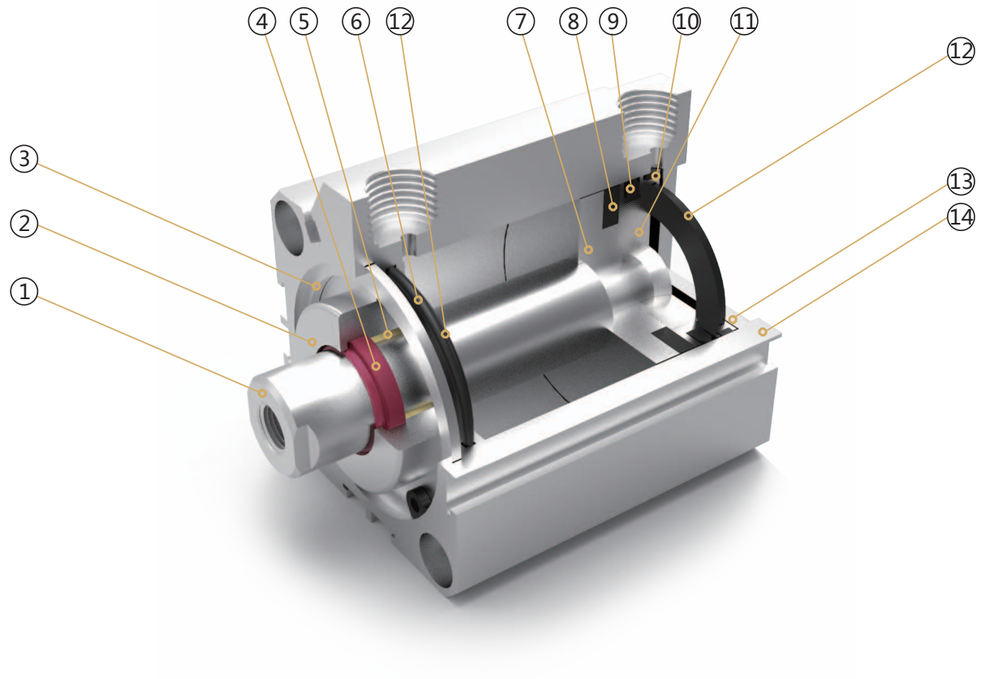

Parts

Number	Name	Number	Name
1	Piston rod	8	Magnet
2	Front cover	9	Piston seal
3	C clip	10	Anti-friction seal
4	Shaft seal	11	Magnet base
5	DU bearing	12	Anti-collision gasket
6	O ring	13	Back cover
7	Piston	14	Body

Cylinder
Sizing
SI
SI A.
SIB
SQ
DNT
SC / SU
SCT
SC A.
SL
DN
DSN
DN/DSN A.
MA
MAC
MA/MAC A.
MAL
MALC
MAL/MACL A.
SDA
CQ2
TCQ2
ADN
TADN
PPRM
ZX
MHL2
Pneumatic Fingers
MXH
MXQ
CJP
CJ2
CDU
TN
CXS
MGP
MSQ

JELPC — China Pneumatic

ISO9001:2008 CE

SDA Series
Compact Cylinder

Overall Dimension

SDA12-16 Female thread

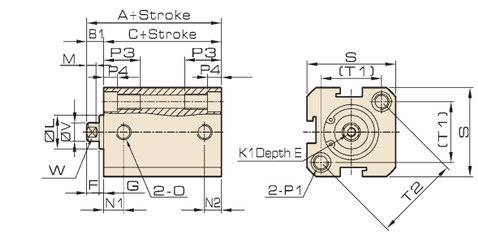

SDA20-100 Female thread

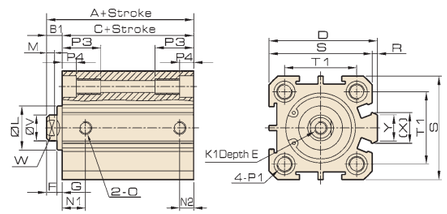

SDA12-16 Male thread

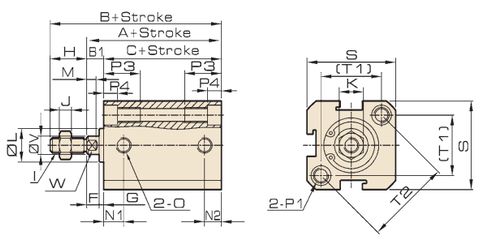

SDA20-100 Male thread

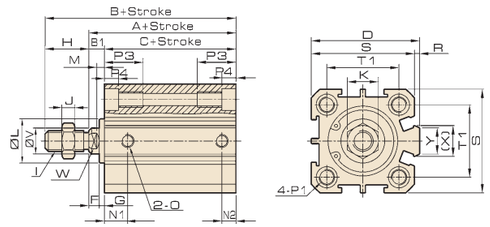

Dimension

Bore/ Symbol	A		B		C		B1	D	E	F	G	H	I	J	K	K1	L	M
Type	Standard	With magnet	Standard	With magnet	Standard	With magnet												
12	22	32	34	44	17	27	5	-	6	4	2	12	M5×0.8	4	8	M3×0.5	10	3
16	24	34	36	46	18.5	28.5	5.5	-	6	4	2	12	M5×0.8	4	8	M3×0.5	11	3
20	25	35	40	50	19.5	29.5	5.5	36	8	4	1.5	15	M6×1.0	5	10	M4×0.7	13	3
25	27	37	44	54	21	31	6	42	10	4	2	17	M8×1.25	6	14	M5×0.8	17	3
32	31.5	41.5	49.5	59.5	24.5	34.5	7	50	12	4	3	18	M10×1.25	6	17	M6×1.0	22	3
40	33	43	61	71	26	36	7	58.5	12	4	3	28	M14×1.5	8	22	M8×1.25	28	3
50	37	47	65	75	28	38	9	71.5	15	5	4	28	M18×1.5	9	27	M10×1.5	38	3
63	41	51	69	79	32	42	9	84.5	15	5	4	28	M18×1.5	9	27	M10×1.5	40	3
80	52	62	85	95	41	51	11	104	20	6	5	33	M22×1.5	13	32	M14×1.5	45	4
100	63	73	101	111	51	61	12	124	20	7	5	38	M26×1.5	12	36	M18×1.5	55	4

Bore/ Symbol	N1		N2		O	P1	P3	P4	R	S	T1	T2	V	W	X	Y
Stroke	S=5	S>5	S=5	S>5												
12	7.5		5		M5×0.8	Double Side: Φ6.5, Cog: M5×0.8, Through Hole: Φ4.2	12	4.5	-	25	16.3	23	6	5	-	-
16	8		5	5.5	M5×0.8	Double Side: Φ6.5, Cog: M5×0.8, Through Hole: Φ4.2	12	4.5	-	29	19.8	28	6	5	-	-
20	8.5		5.5		M5×0.8	Double Side: Φ6.5, Cog: M5×0.8, Through Hole: Φ4.2	14	4.5	2	34	24	-	8	6	11.2	10
25	9		5.5		M5×0.8	Double Side: Φ8.2, Cog: M6×1, Through Hole: Φ4.6	15	5.5	2	40	28	-	10	8	12	10
32	9		6.5	8	G1/8	Double Side: Φ8.2, Cog: M6×1, Through Hole: Φ4.6	16	5.5	6	44	34	-	12	10	18	14
40	9		7.5		G1/8	Double Side: Φ10, Cog: M8×1.25, Through Hole: Φ6.7	20	7.5	6.5	52	40	-	16	14	21	14
50	8	10.5	8	10.5	G1/4	Double Side: Φ11, Cog: M8×1.25, Through Hole: Φ6.7	25	8.5	9.5	62	48	-	20	17	29.5	19
63	9.5	11	9.5	11	G1/4	Double Side: Φ11, Cog: M8×1.25, Through Hole: Φ6.7	25	8.5	9.5	75	60	-	20	17	26	19
80	11.5	14	11.5	14	G3/8	Double Side: Φ15, Cog: M12×1.75, Through Hole: Φ9.2	25	10.5	10	94	74	-	25	22	36	26
100	15	20	15	18	G3/8	Double Side: Φ17.5, Cog: M14×2, Through Hole: Φ11.3	30	13	10	114	90	-	32	27	35.5	26

Overall Dimension

SSA12-16 Female thread

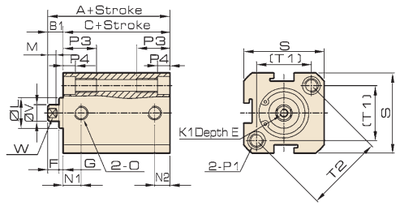

SSA20-63 Female thread

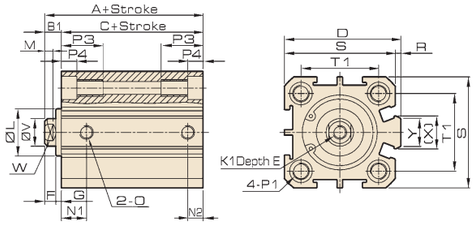

SSA12-16 Male thread

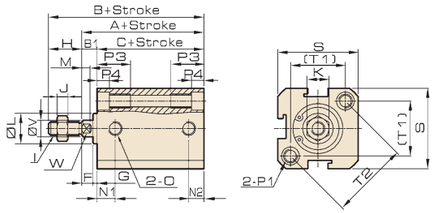

SSA20-63 Male thread

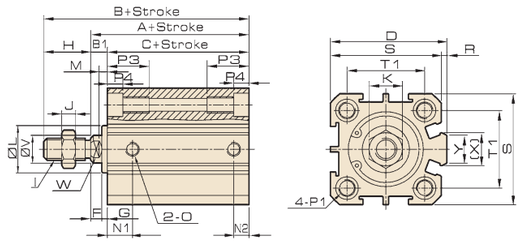

Dimension

Bore/ Symbol	A				B				C				B1	D	E	F	G	H	I	J	K	K1
Type	Standard		With magnet		Standard		With magnet		Standard		With magnet											
Stroke	0 < S≤10	10 < S≤30	0 < S≤10	10 < S≤30	0 < S≤10	10 < S≤30	0 < S≤10	10 < S≤30	0 < S≤10	10 < S≤30	0 < S≤10	10 < S≤30										
12	32	42	42	52	44	54	54	64	27	37	37	47	5	-	6	4	2	12	M5×0.8	4	8	M3×0.5
16	34	44	44	54	46	56	56	66	28.5	38.5	38.5	48.5	5.5	-	6	4	2	12	M5×0.8	4	8	M3×0.5
20	35	45	45	55	50	60	60	70	29.5	39.5	39.5	49.5	5.5	36	8	4	1.5	15	M6×1.0	5	10	M4×0.7
25	37	47	47	57	54	64	64	74	31	41	41	51	6	42	10	4	2	17	M8×1.25	6	14	M5×0.8
32	41.5	51.5	51.5	61.5	59.5	69.5	69.5	79.5	34.5	44.5	44.5	54.5	7	50	12	4	3	18	M10×1.25	6	17	M6×1.0
40	43	53	53	63	71	81	81	91	36	46	46	56	7	58.5	12	4	3	28	M14×1.5	8	22	M8×1.25
50	47	57	57	67	75	85	85	95	38	48	48	58	9	71.5	15	5	4	28	M18×1.5	9	27	M10×1.5
63	51	61	61	71	79	89	89	99	42	52	52	62	9	84.5	15	5	4	28	M18×1.5	9	27	M10×1.5
80	62	72	72	82	95	105	105	115	51	61	61	71	11	104	20	6	5	33	M22×1.5	13	32	M14×1.5
100	73	83	83	93	111	121	121	131	61	71	71	81	12	124	20	7	5	38	M26×1.5	12	36	M18×1.5

Bore/ Symbol	L	M	N1		N2		O	P1	P3	P4	R	S	T1	T2	V	W	X	Y
Stroke			S=5	S>5	S=5	S>5												
12	10	3	7.5		5		M5×0.8	Double Side: Φ6.5, Cog: M5×0.8, Through Hole: Φ4.2	12	4.5	-	25	16.3	23	6	5	-	-
16	11	3	8		5	5.5	M5×0.8	Double Side: Φ6.5, Cog: M5×0.8, Through Hole: Φ4.2	12	4.5	-	29	19.8	28	6	5	-	-
20	13	3	8.5		5.5		M5×0.8	Double Side: Φ6.5, Cog: M5×0.8, Through Hole: Φ4.2	14	4.5	2	34	24	-	8	6	11.2	10
25	17	3	9		5.5		M5×0.8	Double Side: Φ8.2, Cog: M6×1, Through Hole: Φ4.6	15	5.5	2	40	28	-	10	8	12	10
32	22	3	9		6.5	8	G1/8	Double Side: Φ8.2, Cog: M6×1, Through Hole: Φ4.6	16	5.5	6	44	34	-	12	10	18	14
40	28	3	9		7.5		G1/8	Double Side: Φ10, Cog: M8×1.25, Through Hole: Φ6.7	20	7.5	6.5	52	40	-	16	14	21	14
50	38	3	8	10.5	8	10.5	G1/4	Double Side: Φ11, Cog: M8×1.25, Through Hole: Φ6.7	25	8.5	9.5	62	48	-	20	17	29.5	19
63	40	3	9.5	11	9.5	11	G1/4	Double Side: Φ11, Cog: M8×1.25, Through Hole: Φ6.7	25	8.5	9.5	75	60	-	20	17	26	19
80	45	4	11.5	14	11.5	14	G3/8	Double Side: Φ15, Cog: M12×1.75, Through Hole: Φ9.2	25	10.5	10	94	74	-	25	22	36	26
100	55	4	15	20	15	18	G3/8	Double Side: Φ17.5, Cog: M14×2, Through Hole: Φ11.3	30	13	10	114	90	-	32	27	35.5	26

JELPC® | JELPC — China Pneumatic

ISO9001:2008 CE

SDA Series
Compact Cylinder

Overall Dimension

STA12-16 Female thread

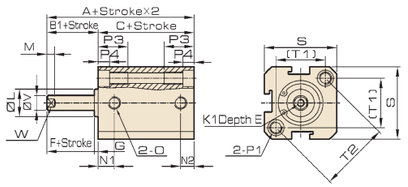

STA20-63 Female thread

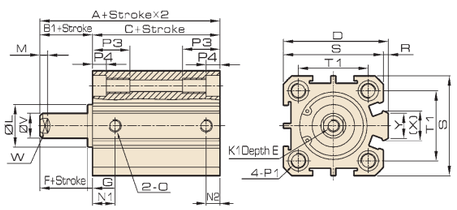

STA12-16 Male thread

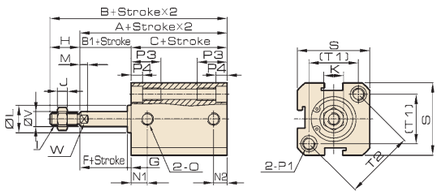

STA20-63 Male thread

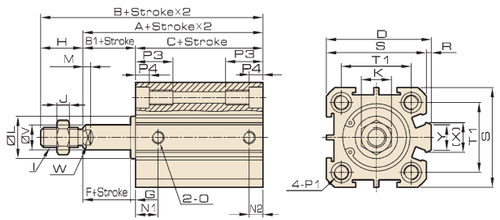

Dimension

Bore/ Symbol	A				B				C				B1	D	E	F	G	H	I	J	K	K1
Type	Standard		With magnet		Standard		With magnet		Standard		With magnet											
Stroke	0 < S≤10	10 < S≤30	0 < S≤10	10 < S≤30	0 < S≤10	10 < S≤30	0 < S≤10	10 < S≤30	0 < S≤10	10 < S≤30	0 < S≤10	10 < S≤30										
12	32	42	42	52	44	54	54	64	27	37	37	47	5	-	6	4	2	12	M5×0.8	4	8	M3×0.5
16	34	44	44	54	46	56	56	66	28.5	38.5	38.5	48.5	5.5	-	6	4	2	12	M5×0.8	4	8	M3×0.5
20	35	45	45	55	50	60	60	70	29.5	39.5	39.5	49.5	5.5	36	8	4	1.5	15	M6×1.0	5	10	M4×0.7
25	37	47	47	57	54	64	64	74	31	41	41	51	6	42	10	4	2	17	M8×1.25	6	14	M5×0.8
32	41.5	51.5	51.5	61.5	59.5	69.5	69.5	79.5	34.5	44.5	44.5	54.5	7	50	12	4	3	18	M10×1.25	6	17	M6×1.0
40	43	53	53	63	71	81	81	91	36	46	46	56	7	58.5	12	4	3	28	M14×1.5	8	22	M8×1.25
50	47	57	57	67	75	85	85	95	38	48	48	58	9	71.5	15	5	4	28	M18×1.5	9	27	M10×1.5
63	51	61	61	71	79	89	89	99	42	52	52	62	9	84.5	15	5	4	28	M18×1.5	9	27	M10×1.5
80	62	72	72	82	95	105	105	115	51	61	61	71	11	104	20	6	5	33	M22×1.5	13	32	M14×1.5
100	73	83	83	93	111	121	121	131	61	71	71	81	12	124	20	7	5	38	M26×1.5	12	36	M18×1.5

Bore/ Symbol	L	M	N1		N2		O	P1	P3	P4	R	S	T1	T2	V	W	X	Y
Stroke			S=5	S>5	S=5	S>5												
12	10	3	7.5		5		M5×0.8	Double Side: Φ6.5, Cog: M5×0.8, Through Hole: Φ4.2	12	4.5	-	25	16.3	23	6	5	-	-
16	11	3	8		5	5.5	M5×0.8	Double Side: Φ6.5, Cog: M5×0.8, Through Hole: Φ4.2	12	4.5	-	29	19.8	28	6	5	-	-
20	13	3	8.5		5.5		M5×0.8	Double Side: Φ6.5, Cog: M5×0.8, Through Hole: Φ4.2	14	4.5	2	34	24	-	8	6	11.2	10
25	17	3	9		5.5		M5×0.8	Double Side: Φ8.2, Cog: M6×1, Through Hole: Φ4.6	15	5.5	2	40	28	-	10	8	12	10
32	22	3	9		6.5	8	G1/8	Double Side: Φ8.2, Cog: M6×1, Through Hole: Φ4.6	16	5.5	6	44	34	-	12	10	18	14
40	28	3	9		7.5		G1/8	Double Side: Φ10, Cog: M8×1.25, Through Hole: Φ6.7	20	7.5	6.5	52	40	-	16	14	21	14
50	38	3	8	10.5	8	10.5	G1/4	Double Side: Φ11, Cog: M8×1.25, Through Hole: Φ6.7	25	8.5	9.5	62	48	-	20	17	29.5	19
63	40	3	9.5	11	9.5	11	G1/4	Double Side: Φ11, Cog: M8×1.25, Through Hole: Φ6.7	25	8.5	9.5	75	60	-	20	17	26	19
80	45	4	11.5	14	11.5	14	G3/8	Double Side: Φ15, Cog: M12×1.75, Through Hole: Φ9.2	25	10.5	10	94	74	-	25	22	36	26
100	55	4	15	20	15	18	G3/8	Double Side: Φ17.5, Cog: M14×2, Through Hole: Φ11.3	30	13	10	114	90	-	32	27	35.5	26

Overall Dimension

SDAD12-16 Female thread

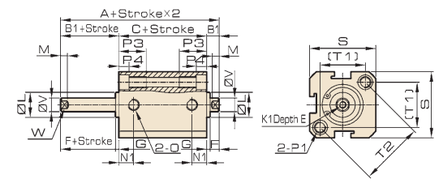

SDAD20-100 Female thread

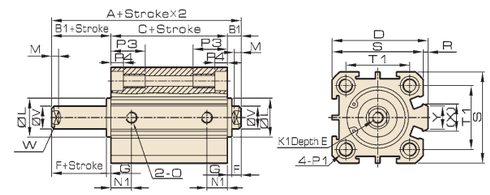

SDAD12-16 Male thread

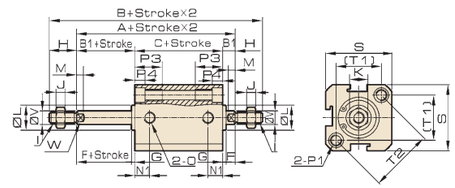

SDAD20-100 Male thread

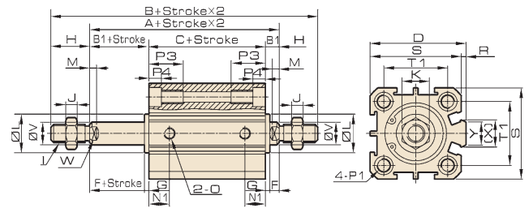

Dimension

Bore/ Symbol	A		B		C		B1	D	E	F	G	H	I	J	K	K1	L	M	N1	
Type	Standard	With magnet	Standard	With magnet	Standard	With magnet													S=5	S>5
12	27	37	51	61	17	27	5	-	6	4	2	12	M5×0.8	4	8	M3×0.5	10	3	5.5	6.5
16	29.5	39.5	53.5	63.5	18.5	28.5	5.5	-	6	4	2	12	M5×0.8	4	8	M3×0.5	11	3	6.5	7.5
20	30.5	40.5	60.5	70.5	19.5	29.5	5.5	36	8	4	1.5	15	M6×1.0	5	10	M4×0.7	13	3	7.5	
25	33	43	67	77	21	31	6	42	10	4	2	17	M8×1.25	6	14	M5×0.8	17	3	8	
32	38.5	48.5	74.5	84.5	24.5	34.5	7	50	12	4	3	18	M10×1.25	6	17	M6×1.0	22	3	8	9
40	40	50	96	106	26	36	7	58.5	12	4	3	28	M14×1.5	8	22	M8×1.25	28	3	8	10
50	46	56	102	112	28	38	9	71.5	15	5	4	28	M18×1.5	9	27	M10×1.5	38	3	8	10.5
63	50	60	106	116	32	42	9	84.5	15	5	4	28	M18×1.5	9	27	M10×1.5	40	3	9.5	11
80	63	73	129	139	41	51	11	104	20	6	5	33	M22×1.5	13	32	M14×1.5	45	4	11.5	14
100	75	85	151	161	51	61	12	124	20	7	5	38	M26×1.5	12	36	M18×1.5	55	4	15	20

Bore/ Symbol	O	P1	P3	P4	R	S	T1	T2	V	W	X	Y
12	M5×0.8	Double Side: Φ6.5, Cog: M5×0.8, Through Hole: Φ4.2	12	4.5	-	25	16.3	23	6	5	-	-
16	M5×0.8	Double Side: Φ6.5, Cog: M5×0.8, Through Hole: Φ4.2	12	4.5	-	29	19.8	28	6	5	-	-
20	M5×0.8	Double Side: Φ6.5, Cog: M5×0.8, Through Hole: Φ4.2	14	4.5	2	34	24	-	8	6	11.2	10
25	M5×0.8	Double Side: Φ8.2, Cog: M6×1, Through Hole: Φ4.6	15	5.5	2	40	28	-	10	8	12	10
32	G1/8	Double Side: Φ8.2, Cog: M6×1, Through Hole: Φ4.6	16	5.5	6	44	34	-	12	10	18	14
40	G1/8	Double Side: Φ10, Cog: M8×1.25, Through Hole: Φ6.7	20	7.5	6.5	52	40	-	16	14	21	14
50	G1/4	Double Side: Φ11, Cog: M8×1.25, Through Hole: Φ6.7	25	8.5	9.5	62	48	-	20	17	29.5	19
63	G1/4	Double Side: Φ11, Cog: M8×1.25, Through Hole: Φ6.7	25	8.5	9.5	75	60	-	20	17	26	19
80	G3/8	Double Side: Φ15, Cog: M12×1.75, Through Hole: Φ9.2	25	10.5	10	94	74	-	25	22	36	26
100	G3/8	Double Side: Φ17.5, Cog: M14×2, Through Hole: Φ11.3	30	13	10	114	90	-	32	27	35.5	26

Cylinder
Sizing
SI
SI A.
SIB
SQ
DNT
SC / SU
SCT
SC A.
SL
DN
DSN
DN/DSN A.
MA
MAC
MA/MAC A.
MAL
MALC
MAL/MACL A.
SDA
CQ2
TCQ2
ADN
TADN
PPRM
ZX
MHL2
Pneumatic Fingers
MXH
MXQ
CJP
CJ2
CDU
TN
CXS
MGP
MSQ

JELPC — China Pneumatic

Overall Dimension

SDAJ12-16 Female thread

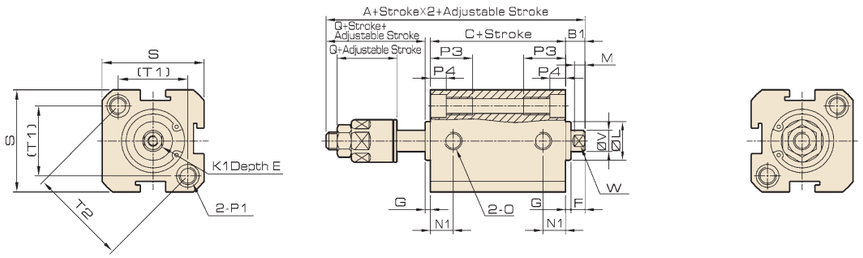

SDAJ12-16 Male thread

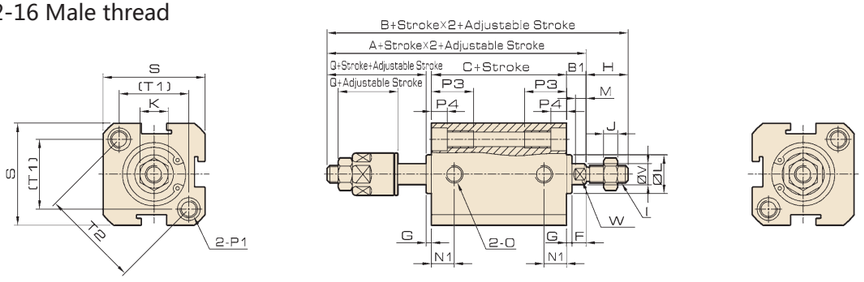

Dimension

Bore/ Symbol	A		B		C		B1	D	E	F	G	H	I	J	K	K1	L	M	N1	
Type	Standard	With magnet	Standard	With magnet	Standard	With magnet													S=5	S>5
12	41	51	53	63	17	27	5	-	6	4	2	12	M5×0.8	4	8	M3×0.5	10	3	5.5	6.5
16	43	53	55	65	18.5	28.5	5.5	-	6	4	2	12	M5×0.8	4	8	M3×0.5	11	3	6.5	7.5
20	47.5	57.5	62.5	72.5	19.5	29.5	5.5	36	8	4	1.5	15	M6×1.0	5	10	M4×0.7	13	3	7.5	
25	53	63	70	80	21	31	6	42	10	4	2	17	M8×1.25	6	14	M5×0.8	17	3	8	
32	61.5	71.5	79.5	89.5	24.5	34.5	7	50	12	4	3	18	M10×1.25	6	17	M6×1.0	22	3	8	9
40	64	74	92	102	26	36	7	58.5	12	4	3	28	M14×1.5	8	22	M8×1.25	28	3	8	10
50	70	80	98	108	28	38	9	71.5	15	5	4	28	M18×1.5	9	27	M10×1.5	38	3	8	10.5
63	74	84	102	112	32	42	9	84.5	15	5	4	28	M18×1.5	9	27	M10×1.5	40	3	9.5	11
80	92.5	102.5	125.5	135.5	41	51	11	104	20	6	5	33	M22×1.5	13	32	M14×1.5	45	4	11.5	14
100	110.5	120.5	148.5	158.5	51	61	12	124	20	7	5	38	M26×1.5	12	36	M18×1.5	55	4	15	20

Bore/ Symbol	O	P1	P3	P4	Q	R	S	T1	T2	V	W	X	Y
12	M5×0.8	Double Side: Φ6.5, Cog: M5×0.8, Through Hole: Φ4.2	12	4.5	17	-	25	16.3	23	6	5	-	-
16	M5×0.8	Double Side: Φ6.5, Cog: M5×0.8, Through Hole: Φ4.2	12	4.5	17	-	29	19.8	28	6	5	-	-
20	M5×0.8	Double Side: Φ6.5, Cog: M5×0.8, Through Hole: Φ4.2	14	4.5	21	2	34	24	-	8	6	11.2	10
25	M5×0.8	Double Side: Φ8.2, Cog: M6×1, Through Hole: Φ4.6	15	5.5	24	2	40	28	-	10	8	12	10
32	G1/8	Double Side: Φ8.2, Cog: M6×1, Through Hole: Φ4.6	16	5.5	27	6	44	34	-	12	10	18	14
40	G1/8	Double Side: Φ10, Cog: M8×1.25, Through Hole: Φ6.7	20	7.5	28	6.5	52	40	-	16	14	21	14
50	G1/4	Double Side: Φ11, Cog: M8×1.25, Through Hole: Φ6.7	25	8.5	29	9.5	62	48	-	20	17	29.5	19
63	G1/4	Double Side: Φ11, Cog: M8×1.25, Through Hole: Φ6.7	25	8.5	29	9.5	75	60	-	20	17	26	19
80	G3/8	Double Side: Φ15, Cog: M12×1.75, Through Hole: Φ9.2	25	10.5	35.5	10	94	74	-	25	22	36	26
100	G3/8	Double Side: Φ17.5, Cog: M14×2, Through Hole: Φ11.3	30	13	42.5	10	114	90	-	32	27	35.5	26

ISO9001:2008 CE

Overall Dimension

SDAJ20-100 Female thread

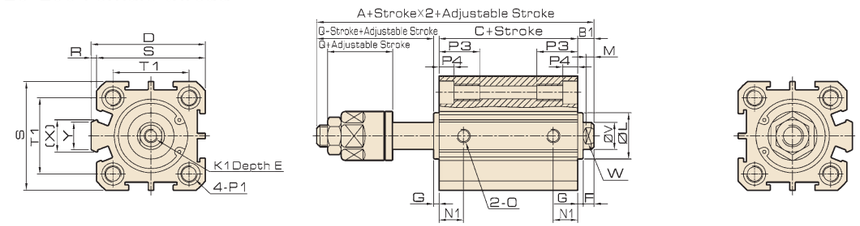

SDAJ20-100 Male thread

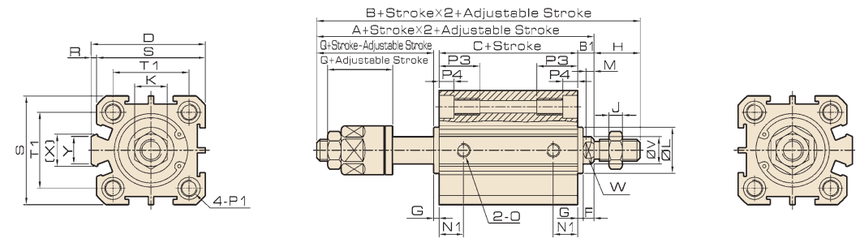

Dimension

Bore/ Symbol	A		B		C		B1	D	E	F	G	H	I	J	K	K1	L	M	N1	
Type	Standard	With magnet	Standard	With magnet	Standard	With magnet													S=5	S>5
12	41	51	53	63	17	27	5	-	6	4	2	12	M5×0.8	4	8	M3×0.5	10	3	5.5	6.5
16	43	53	55	65	18.5	28.5	5.5	-	6	4	2	12	M5×0.8	4	8	M3×0.5	11	3	6.5	7.5
20	47.5	57.5	62.5	72.5	19.5	29.5	5.5	36	8	4	1.5	15	M6×1.0	5	10	M4×0.7	13	3	7.5	
25	53	63	70	80	21	31	6	42	10	4	2	17	M8×1.25	6	14	M5×0.8	17	3	8	
32	61.5	71.5	79.5	89.5	24.5	34.5	7	50	12	4	3	18	M10×1.25	6	17	M6×1.0	22	3	8	9
40	64	74	92	102	26	36	7	58.5	12	4	3	28	M14×1.5	8	22	M8×1.25	28	3	8	10
50	70	80	98	108	28	38	9	71.5	15	5	4	28	M18×1.5	9	27	M10×1.5	38	3	8	10.5
63	74	84	102	112	32	42	9	84.5	15	5	4	28	M18×1.5	9	27	M10×1.5	40	3	9.5	11
80	92.5	102.5	125.5	135.5	41	51	11	104	20	6	5	33	M22×1.5	13	32	M14×1.5	45	4	11.5	14
100	110.5	120.5	148.5	158.5	51	61	12	124	20	7	5	38	M26×1.5	12	36	M18×1.5	55	4	15	20

Bore/ Symbol	O	P1	P3	P4	Q	R	S	T1	T2	V	W	X	Y
12	M5×0.8	Double Side: Φ6.5, Cog: M5×0.8, Through Hole: Φ4.2	12	4.5	17	-	25	16.3	23	6	5	-	-
16	M5×0.8	Double Side: Φ6.5, Cog: M5×0.8, Through Hole: Φ4.2	12	4.5	17	-	29	19.8	28	6	5	-	-
20	M5×0.8	Double Side: Φ6.5, Cog: M5×0.8, Through Hole: Φ4.2	14	4.5	21	2	34	24	-	8	6	11.2	10
25	M5×0.8	Double Side: Φ8.2, Cog: M6×1, Through Hole: Φ4.6	15	5.5	24	2	40	28	-	10	8	12	10
32	G1/8	Double Side: Φ8.2, Cog: M6×1, Through Hole: Φ4.6	16	5.5	27	6	44	34	-	12	10	18	14
40	G1/8	Double Side: Φ10, Cog: M8×1.25, Through Hole: Φ6.7	20	7.5	28	6.5	52	40	-	16	14	21	14
50	G1/4	Double Side: Φ11, Cog: M8×1.25, Through Hole: Φ6.7	25	8.5	29	9.5	62	48	-	20	17	29.5	19
63	G1/4	Double Side: Φ11, Cog: M8×1.25, Through Hole: Φ6.7	25	8.5	29	9.5	75	60	-	20	17	26	19
80	G3/8	Double Side: Φ15, Cog: M12×1.75, Through Hole: Φ9.2	25	10.5	35.5	10	94	74	-	25	22	36	26
100	G3/8	Double Side: Φ17.5, Cog: M14×2, Through Hole: Φ11.3	30	13	42.5	10	114	90	-	32	27	35.5	26

Cylinder
Sizing
SI
SI A.
SIB
SQ
DNT
SC / SU
SCT
SC A.
SL
DN
DSN
DN/DSN A.
MA
MAC
MA/MAC A.
MAL
MALC
MAL/MACL A.
SDA
CQ2
TCQ2
ADN
TADN
PPRM
ZX
MHL2
Pneumatic Fingers
MXH
MXQ
CJP
CJ2
CDU
TN
CXS
MGP
MSQ

JELPC® | JELPC — China Pneumatic

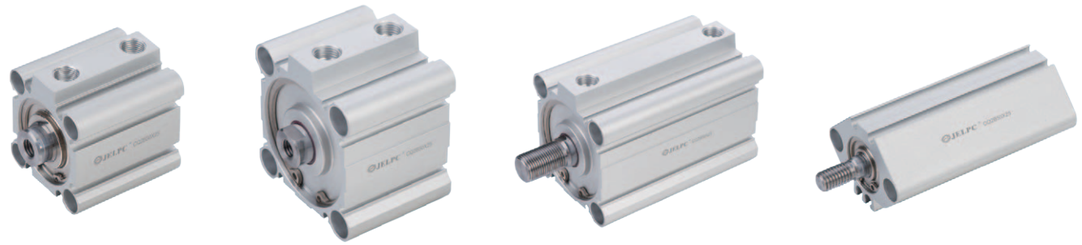

Features

1. Changed copper bearing and use DU bearing.
2. Changed NBR seal and use PU seal.
3. Changed anti-friction seal and use new POM anti-friction seal.
4. Using new SDA rolling technique for the piston rod and piston.
5. Using SDA rolling technique for the tail barrel (S > 100, end cover use snap ring structure).
6. Gasket use SDA anti-collision gasket structure.
7. Barrel appearance is same with SMC new type-CQ2 series, easy to install the sensor and save material.

Ordering Code

CDQ2	-	W	-	B	-	32	x	30	-	10	-	M	-	MT
Inner Magnet		Operation		Mountings		Bore		Stroke		Adjustable Stroke		Thread		Sensor
Blank: Without magnet		Blank: Standard Double acting		B: Thru hole (Standard)		12				10: 10mm		Blank: Female thread		D-A93
D: With magnet		S: Single acting, spring-out		A: Both end thread hole		16				20: 20mm		M: Male thread		* Standard wire is 1 meter, please order for other length
		T: Single acting, spring-in				20				30: 30mm				
		W: Double shaft				25				50: 50mm				
		J: Adjustable				32				75: 75mm				
						40				100: 100mm				
						50								
						63								
						80								
						100								

Symbol

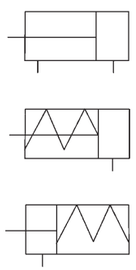

Specification

Bore (mm)		12	16	20	25	32	40	50	63	80	100
Operation		Double Acting									
		Single Acting Spring-out / Single Acting Spring-in								-	
Working Medium		Air									
Operating Pressure Range	Double Acting	0.1 ~ 1.0MPa									
	Single Acting	0.2 ~ 0.9MPa								-	
Proof Pressure		1.5MPa									
Operating Temperature Range		-20 ~ 70℃									
Operating Speed Range	Double Acting	30 ~ 500mm/s					30 ~ 350mm/s		30 ~ 250mm/s		
	Single Acting	50 ~ 500mm/s								-	
Port Size		M5x0.8				G1/8		G1/4		G3/8	

CQ2 Series
Thin Type Cylinder

Cylinder
Sizing
SI
SI A.
SIB
SQ
DNT
SC / SU
SCT
SC A.
SL
DN
DSN
DN/DSN A.
MA
MAC
MA/MAC A.
MAL
MALC
MAL/MACL A.
SDA
CQ2
TCQ2
ADN
TADN
PPRM
ZX
MHL2
Pneumatic Fingers
MXH
MXQ
CJP
CJ2
CDU
TN
CXS
MGP
MSQ

Internal Structure

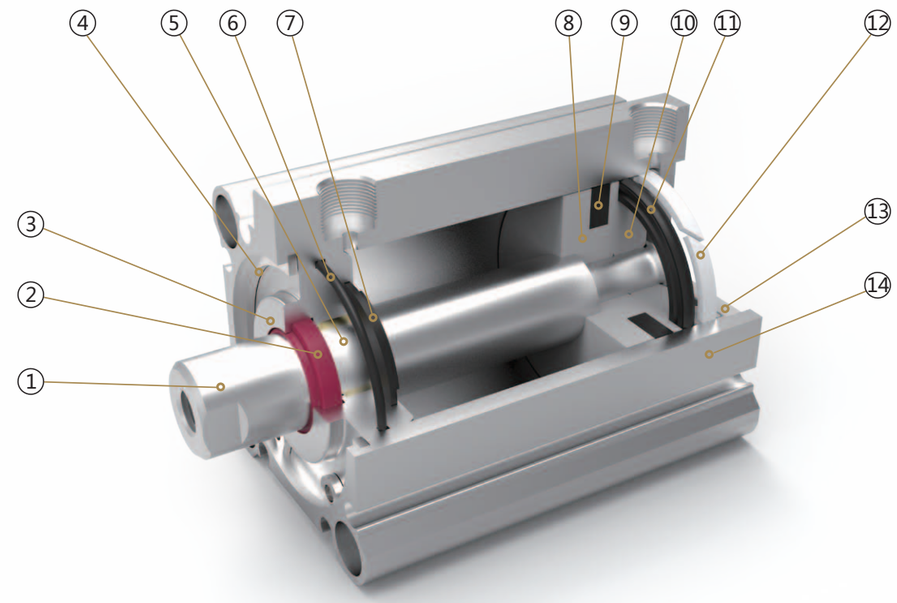

Parts

Number	Name	Number	Name
1	Piston rod	8	Piston
2	Shaft seal	9	Magnet
3	Front cover	10	Magnet base
4	C clip	11	Piston seal
5	DU bearing	12	Anti-friction seal
6	O ring	13	Back cover
7	Anti-collision gasket	14	Body

JELPC — China Pneumatic

Overall Dimension

Ø12~Ø25 Without magnet

Standard (Thru hole) / CQ2B

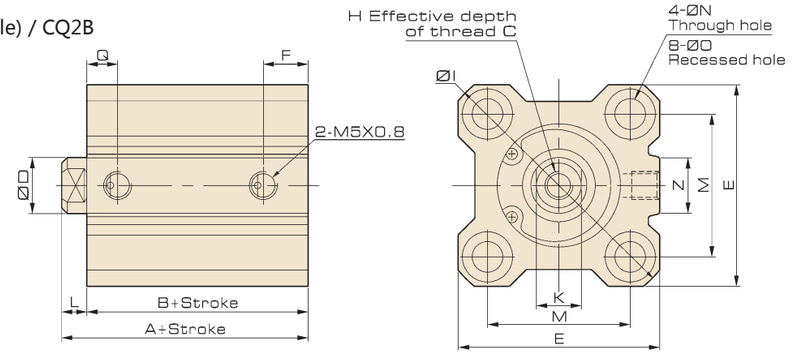

Male Piston Rod Thread

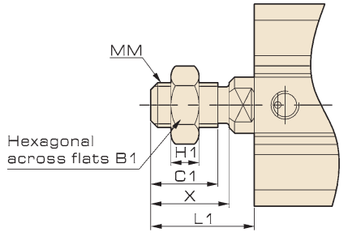

Both Ends of Thread / CQ2A

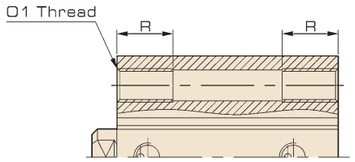

Dimension

Bore/Symbol	Stroke Range (mm)	A	B	C	D	E	F	H	I	K	L	M
12	5~30	20.5	17	6	6	25	5	M3×0.5	32	5	3.5	15.5
16	5~30	22	18.5	8	8	29	5.5	M4×0.7	38	6	3.5	20
20	5~50	24	19.5	7	10	36	5.5	M5×0.8	47	8	4.5	25.5
25	5~50	27.5	22.5	12	12	40	5.5	M6×1	52	10	5	28

Bore/Symbol	N	O	Q	Z	B1	C1	H1	L1	MM	X	O1	R
12	3.5	6.5 deep 3.5	7.5	-	8	9	4	14	M5×0.8	10.5	M4×0.7	7
16	3.5	6.5 deep 3.5	8	10	10	10	5	15.5	M6×1	12	M4×0.7	7
20	5.5	9 deep 7	8	10	13	12	5	18.5	M8×1.25	14	M6×1	10
25	5.5	9 deep 7	9	10	17	15	6	22.5	M10×1.25	17.5	M6×1	10

ISO9001:2008 CE

Overall Dimension

Ø12~Ø25 Without magnet

Spring-out (Thru hole) CQ2SB

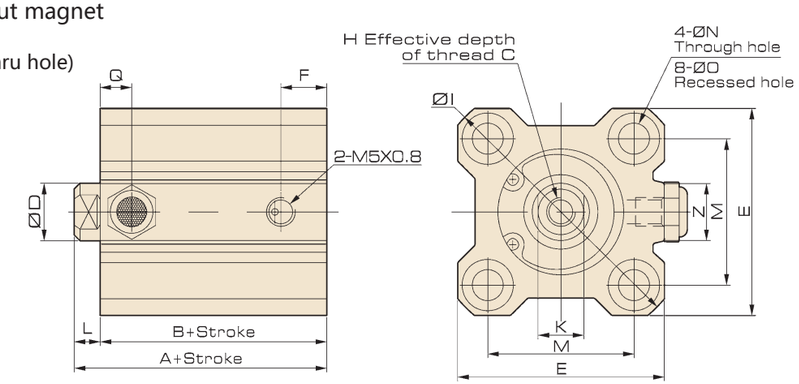

Male Piston Rod Thread

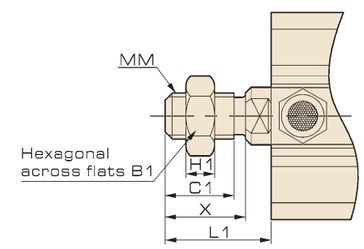

Both Ends of Thread / CQ2SA

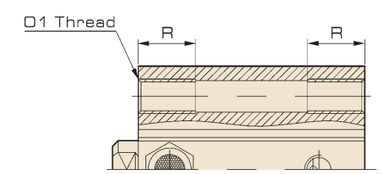

Dimension

Bore/Symbol	Stroke Range (mm)	A	B	C	D	E	F	H	I	K	L	M
12	5/10	30.5	27	6	6	25	5	M3×0.5	32	5	3.5	15.5
	15/20	40.5	37									
16	5/10	32	28.5	8	8	29	5.5	M4×0.7	38	6	3.5	20
	15/20	42	38.5									
20	5/10	34	29.5	7	10	36	5.5	M5×0.8	47	8	4.5	25.5
	15/20/25/30	44	39.5									
25	5/10	37.5	32.5	12	12	40	5.5	M6×1	52	10	5	28
	15/20/25/30	47.5	42.5									

Bore/Symbol	N	O	Q	Z	B1	C1	H1	L1	MM	X	O1	R
12	3.5	6.5 deep 3.5	7.5	-	8	9	4	14	M5×0.8	10.5	M4×0.7	7
16	3.5	6.5 deep 3.5	8	10	10	10	5	15.5	M6×1	12	M4×0.7	7
20	5.5	9 deep 7	8	10	13	12	5	18.5	M8×1.25	14	M6×1	10
25	5.5	9 deep 7	9	10	17	15	6	22.5	M10×1.25	17.5	M6×1	10

Cylinder
Sizing
SI
SI A.
SIB
SQ
DNT
SC / SU
SCT
SC A.
SL
DN
DSN
DN/DSN A.
MA
MAC
MA/MAC A.
MAL
MALC
MAL/MACL A.
SDA
CQ2
TCQ2
ADN
TADN
PPRM
ZX
MHL2
Pneumatic Fingers
MXH
MXQ
CJP
CJ2
CDU
TN
CXS
MGP
MSQ

JELPC® | JELPC — China Pneumatic

Overall Dimension

Ø12~Ø25 Without magnet

Spring-in (Thru hole) CQ2TB

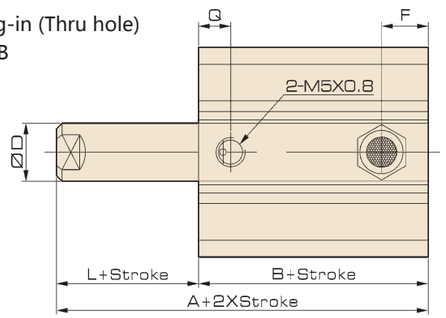

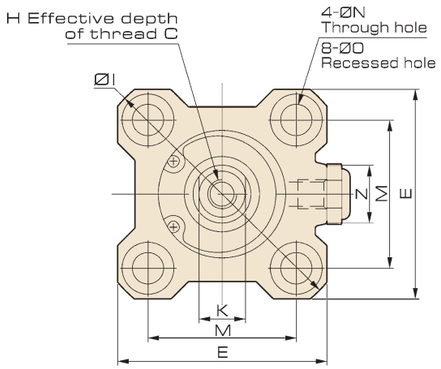

Male Piston Rod Thread

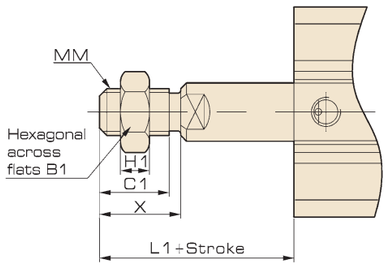

Both Ends of Thread / CQ2TA

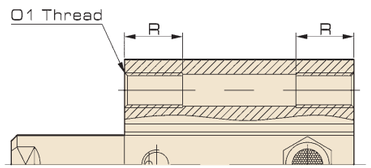

Dimension

Bore/Symbol	Stroke Range (mm)	A	B	C	D	E	F	H	I	K	L	M
12	5/10	30.5	27	6	6	25	5	M3×0.5	32	5	3.5	15.5
	15/20	40.5	37									
16	5/10	32	28.5	8	8	29	5.5	M4×0.7	38	6	3.5	20
	15/20	42	38.5									
20	5/10	34	29.5	7	10	36	5.5	M5×0.8	47	8	4.5	25.5
	15/20/25/30	44	39.5									
25	5/10	37.5	32.5	12	12	40	5.5	M6×1	52	10	5	28
	15/20/25/30	47.5	42.5									

Bore/Symbol	N	O	Q	Z	B1	C1	H1	L1	MM	X	O1	R
12	3.5	6.5 deep 3.5	7.5	-	8	9	4	14	M5×0.8	10.5	M4×0.7	7
16	3.5	6.5 deep 3.5	8	10	10	10	5	15.5	M6×1	12	M4×0.7	7
20	5.5	9 deep 7	8	10	13	12	5	18.5	M8×1.25	14	M6×1	10
25	5.5	9 deep 7	9	10	17	15	6	22.5	M10×1.25	17.5	M6×1	10

ISO9001:2008 CE

Overall Dimension

Ø12~Ø25 Without magnet

Standard (Thru hole) CQ2WB

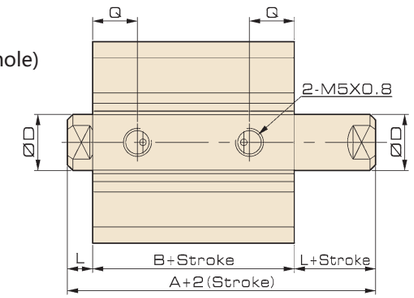

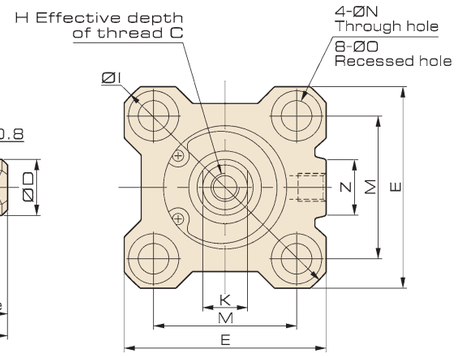

Both Ends of Thread / CQ2WA

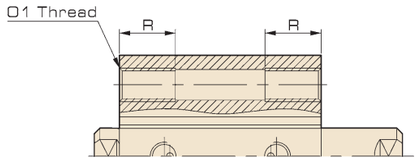

Male Piston Rod Thread

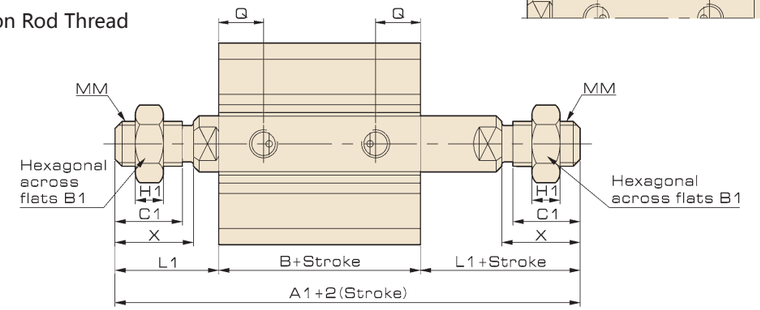

Dimension

Bore/Symbol	Stroke Range (mm)	A	B	C	D	E	H	I	K	L	M	N
12	5~30	32.2	25.2	6	6	25	M3×0.5	32	5	3.5	15.5	3.5
16	5~30	33	26	8	8	29	M4×0.7	38	6	3.5	20	3.5
20	5~50	35	26	7	10	36	M5×0.8	47	8	4.5	25.5	5.5
25	5~50	39	29	12	12	40	M6×1	52	10	5	28	5.5

Bore/Symbol	O	Q	Z	A1	B1	C1	H1	L1	MM	X	O1	R
12	6.5 deep 3.5	9	-	43.2	8	9	4	14	M5×0.8	10.5	M4×0.7	7
16	6.5 deep 3.5	9.5	10	57	10	10	5	15.5	M6×1	12	M4×0.7	7
20	9 deep 7	8	10	63	13	12	5	18.5	M8×1.25	14	M6×1	10
25	9 deep 7	9	10	74	17	15	6	22.5	M10×1.25	17.5	M6×1	10

Cylinder
Sizing
SI
SI A.
SIB
SQ
DNT
SC / SU
SCT
SC A.
SL
DN
DSN
DN/DSN A.
MA
MAC
MA/MAC A.
MAL
MALC
MAL/MACL A.
SDA
CQ2
TCQ2
ADN
TADN
PPRM
ZX
MHL2
Pneumatic Fingers
MXH
MXQ
CJP
CJ2
CDU
TN
CXS
MGP
MSQ

JELPC — China Pneumatic

ISO9001:2008 CE

Overall Dimension

Ø12~Ø25 Without magnet

Standard (Thru hole) CQ2JB

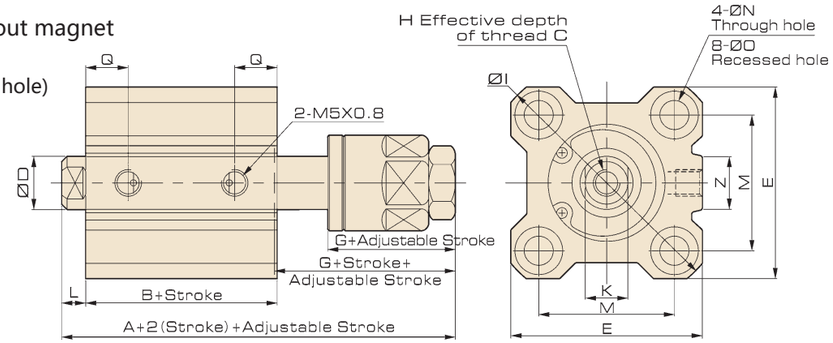

Both Ends of Thread / CQ2JA

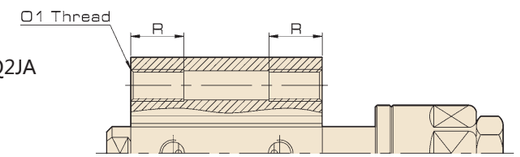

Male Piston Rod Thread

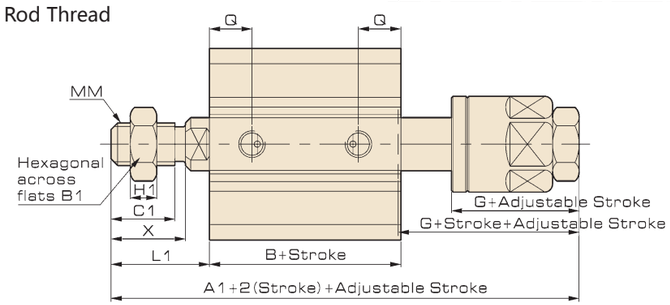

Dimension

Bore/Symbol	Stroke Range (mm)	A	B	C	D	E	G	H	I	K	L	M	N
12	5~30	45.2	25.2	6	6	25	17	M3×0.5	32	5	3.5	15.5	3.5
16	5~30	50	26	8	8	29	21	M4×0.7	38	6	3.5	20	3.5
20	5~50	54	26	7	10	36	24	M5×0.8	47	8	4.5	25.5	5.5
25	5~50	60.5	29	12	12	40	27	M6×1	52	10	5	28	5.5

Bore/Symbol	O	Q	Z	A1	B1	C1	H1	L1	MM	X	O1	R
12	6.5 deep 3.5	9	-	55.7	8	9	4	14	M5×0.8	10.5	M4×0.7	7
16	6.5 deep 3.5	9.5	10	62	10	10	5	15.5	M6×1	12	M4×0.7	7
20	9 deep 7	8	10	68	13	12	5	18.5	M8×1.25	14	M6×1	10
25	9 deep 7	9	10	78	17	15	6	22.5	M10×1.25	17.5	M6×1	10

Overall Dimension

Ø12~Ø25 With magnet

Both Ends of Thread / CDQ2A

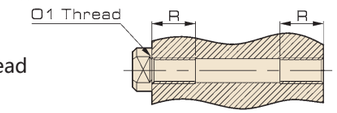

Standard (Thru hole) / CDQ2B Ø16~Ø25

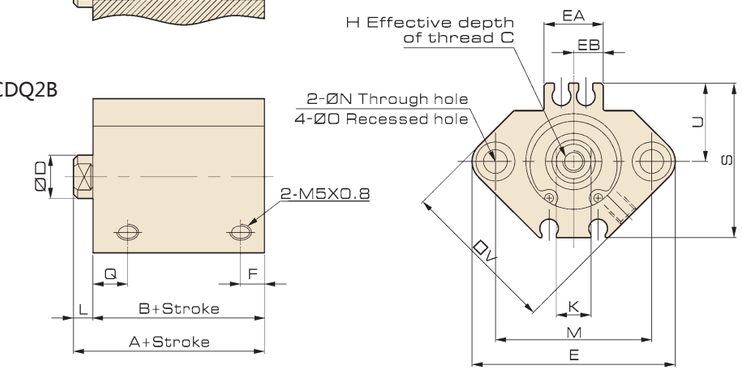

Male Piston Rod Thread Ø12

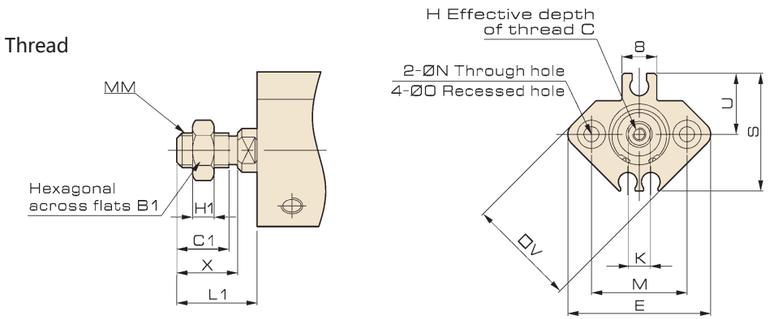

Dimension

Bore/Symbol	Stroke Range (mm)	A	B	C	D	E	EA	EB	F	H	K	L	M	N
12	5~30	31.5	28	6	6	33	-	-	7	M3×0.5	5	3.5	22	3.5
16	5~30	34	30.5	8	8	37	13.2	6.6	5.5	M4×0.7	6	3.5	28	3.5
20	5~50	36	31.5	7	10	47	13.6	6.8	5.5	M5×0.8	8	4.5	36	5.5
25	5~50	37.5	32.5	12	12	52	13.6	6.8	5.5	M6×1	10	5	40	5.5

Bore/Symbol	O	Q	S	U	V	B1	C1	H1	L1	MM	X	O1	R
12	6.5 deep 3.5	9	27.5	14	25	8	9	4	14	M5×0.8	10.5	M4×0.7	7
16	6.5 deep 3.5	9.5	29.5	15	29	10	10	5	15.5	M6×1	12	M4×0.7	7
20	9 deep 7	8	35.5	18	36	13	12	5	18.5	M8×1.25	14	M6×1	10
25	9 deep 7	9	40.5	21	40	17	15	6	22.5	M10×1.25	17.5	M6×1	10

Cylinder
Sizing
SI
SI A.
SIB
SQ
DNT
SC / SU
SCT
SC A.
SL
DN
DSN
DN/DSN A.
MA
MAC
MA/MAC A.
MAL
MALC
MAL/MACL A.
SDA
CQ2
TCQ2
ADN
TADN
PPRM
ZX
MHL2
Pneumatic Fingers
MXH
MXQ
CJP
CJ2
CDU
TN
CXS
MGP
MSQ

JELPC® | JELPC — China Pneumatic

Overall Dimension

Ø12~Ø25 With magnet

Both Ends of Thread
CDQ2SA

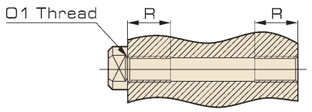

Spring-out (Thru hole)
CDQ2SB
Ø16~Ø25

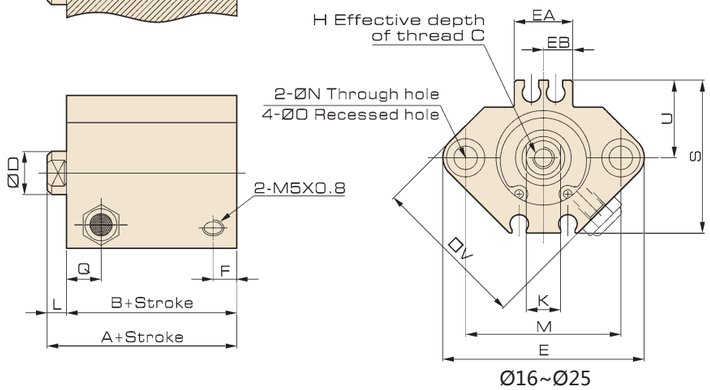

Male Piston Rod Thread

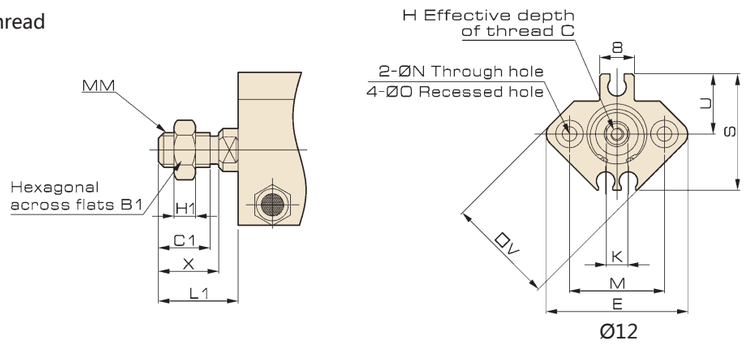

Dimension

Bore/Symbol	Stroke Range (mm)	A	B	C	D	E	EA	EB	F	H	K	L	M
12	5/10	41.5	38	6	6	33	-	-	7	M3×0.5	5	3.5	22
	15/20	51.5	48										
16	5/10	44	40.5	8	8	37	13.2	6.6	5.5	M4×0.7	6	3.5	28
	15/20	54	50.5										
20	5/10	46	41.5	7	10	47	13.6	6.8	5.5	M5×0.8	8	4.5	36
	15/20/25/30	56	51.5										
25	5/10	47.5	42.5	12	12	52	13.6	6.8	5.5	M6×1	10	5	40
	15/20/25/30	57.5	52.5										

Bore/Symbol	N	O	Q	S	U	V	B1	C1	H1	L1	MM	X	O1	R
12	3.5	6.5 deep 3.5	9	27.5	14	25	8	9	4	14	M5×0.8	10.5	M4×0.7	7
16	3.5	6.5 deep 3.5	9.5	29.5	15	29	10	10	5	15.5	M6×1	12	M4×0.7	7
20	5.5	9 deep 7	8	35.5	18	36	13	12	5	18.5	M8×1.25	14	M6×1	10
25	5.5	9 deep 7	9	40.5	21	40	17	15	6	22.5	M10×1.25	17.5	M6×1	10

ISO9001:2008 CE

Overall Dimension

Ø12~Ø25 With magnet

Both Ends of Thread
CDQ2TA

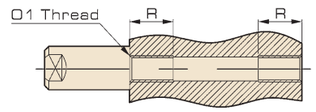

Spring-in (Thru hole)
CDQ2TB
Ø16~Ø25

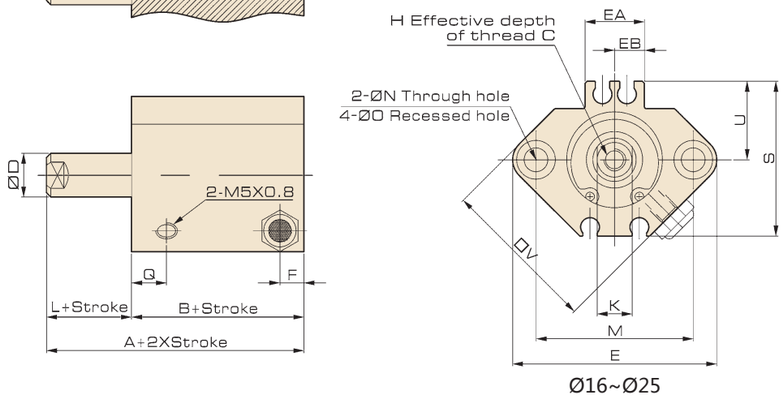

Male Piston Rod Thread

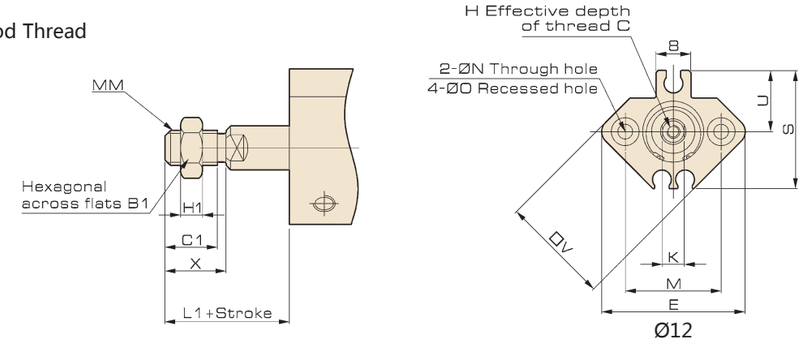

Dimension

Bore/Symbol	Stroke Range (mm)	A	B	C	D	E	EA	EB	F	H	K	L	M
12	5/10	41.5	38	6	6	33	-	-	7	M3×0.5	5	3.5	22
	15/20	51.5	48										
16	5/10	44	40.5	8	8	37	13.2	6.6	5.5	M4×0.7	6	3.5	28
	15/20	54	50.5										
20	5/10	46	41.5	7	10	47	13.6	6.8	5.5	M5×0.8	8	4.5	36
	15/20/25/30	56	51.5										
25	5/10	47.5	42.5	12	12	52	13.6	6.8	5.5	M6×1	10	5	40
	15/20/25/30	57.5	52.5										

Bore/Symbol	N	O	Q	S	U	V	B1	C1	H1	L1	MM	X	O1	R
12	3.5	6.5 deep 3.5	9	27.5	14	25	8	9	4	14	M5×0.8	10.5	M4×0.7	7
16	3.5	6.5 deep 3.5	9.5	29.5	15	29	10	10	5	15.5	M6×1	12	M4×0.7	7
20	5.5	9 deep 7	8	35.5	18	36	13	12	5	18.5	M8×1.25	14	M6×1	10
25	5.5	9 deep 7	9	40.5	21	40	17	15	6	22.5	M10×1.25	17.5	M6×1	10

Cylinder
Sizing
SI
SI A.
SIB
SQ
DNT
SC / SU
SCT
SC A.
SL
DN
DSN
DN/DSN A.
MA
MAC
MA/MAC A.
MAL
MALC
MAL/MACL A.
SDA
CQ2
TCQ2
ADN
TADN
PPRM
ZX
MHL2
Pneumatic Fingers
MXH
MXQ
CJP
CJ2
CDU
TN
CXS
MGP
MSQ

JELPC® | JELPC — China Pneumatic

Overall Dimension

Ø12~Ø25 With magnet

Both Ends of Thread CDQ2WA

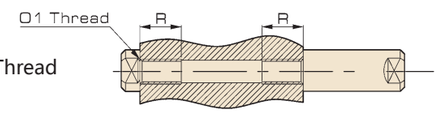

Standard (Thru hole) / CDQ2WB Ø16~Ø25

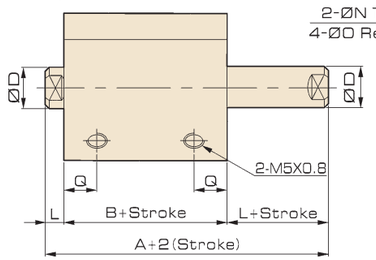

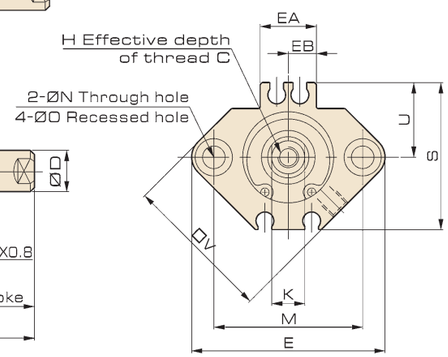

Ø16~Ø25

Male Piston Rod Thread

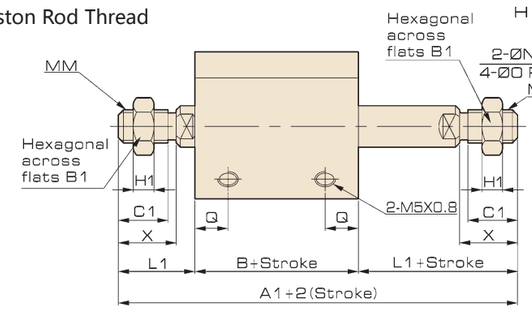

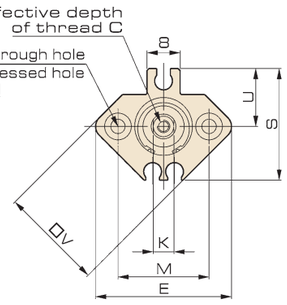

Ø12

Dimension

Bore/Symbol	Stroke Range (mm)	A	B	C	D	E	EA	EB	H	K	L	M	N	O
12	5~30	39.4	32.4	6	6	33	-	-	M3×0.5	5	3.5	22	3.5	6.5 deep 3.5
16	5~30	43	36	8	8	37	13.2	6.6	M4×0.7	6	3.5	28	3.5	6.5 deep 3.5
20	5~50	47	38	7	10	47	13.6	6.8	M5×0.8	8	4.5	36	5.5	9 deep 7
25	5~50	49	39	12	12	52	13.6	6.8	M6×1	10	5	40	5.5	9 deep 7

Bore/Symbol	Q	S	U	V	A1	B1	C1	H1	L1	MM	X	O1	R
12	9	27.5	14	25	60.4	8	9	4	14	M5×0.8	10.5	M4×0.7	7
16	9.5	29.5	15	29	67	10	10	5	15.5	M6×1	12	M4×0.7	7
20	8	35.5	18	36	75	13	12	5	18.5	M8×1.25	14	M6×1	10
25	9	40.5	21	40	84	17	15	6	22.5	M10×1.25	17.5	M6×1	10

ISO9001:2008 CE

Overall Dimension

Ø12~Ø25 With magnet

Both Ends of Thread CDQ2JA

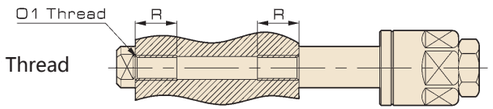

Standard (Thru hole) / CDQ2JB Ø16~Ø25

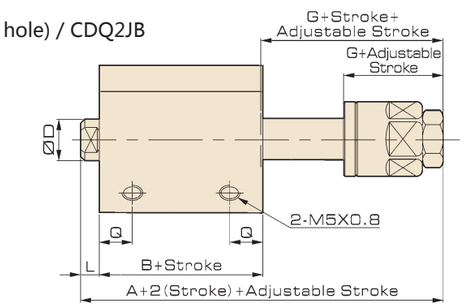

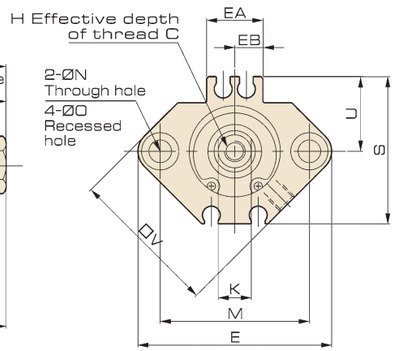

Ø16~Ø25

Male Piston Rod Thread

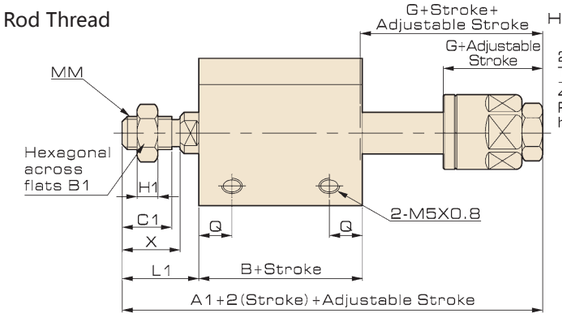

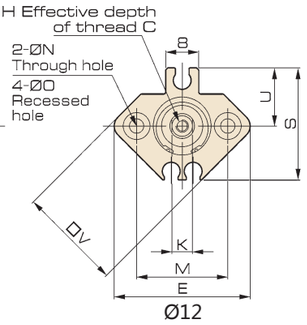

Ø12

Dimension

Bore/Symbol	Stroke Range (mm)	A	B	C	D	E	EA	EB	G	H	K	L	M	N
12	5~30	52.4	32.4	6	6	33	-	-	17	M3×0.5	5	3.5	22	3.5
16	5~30	60	36	8	8	37	13.2	6.6	21	M4×0.7	6	3.5	28	3.5
20	5~50	66	38	7	10	47	13.6	6.8	24	M5×0.8	8	4.5	36	5.5
25	5~50	70.5	39	12	12	52	13.6	6.8	27	M6×1	10	5	40	5.5

Bore/Symbol	O	Q	S	U	V	A1	B1	C1	H1	L1	MM	X	O1	R
12	6.5 deep 3.5	9	27.5	14	25	62.9	8	9	4	14	M5×0.8	10.5	M4×0.7	7
16	6.5 deep 3.5	9.5	29.5	15	29	72	10	10	5	15.5	M6×1	12	M4×0.7	7
20	9 deep 7	8	35.5	18	36	80	13	12	5	18.5	M8×1.25	14	M6×1	10
25	9 deep 7	9	40.5	21	40	88	17	15	6	22.5	M10×1.25	17.5	M6×1	10

Cylinder
Sizing
SI
SI A.
SIB
SQ
DNT
SC / SU
SCT
SC A.
SL
DN
DSN
DN/DSN A.
MA
MAC
MA/MAC A.
MAL
MALC
MAL/MACL A.
SDA
CQ2
TCQ2
ADN
TADN
PPRM
ZX
MHL2
Pneumatic Fingers
MXH
MXQ
CJP
CJ2
CDU
TN
CXS
MGP
MSQ

JELPC® | JELPC — China Pneumatic

Overall Dimension

Ø32~Ø100 Without magnet / With magnet

Standard (Thru hole)
CQ2B / CDQ2B

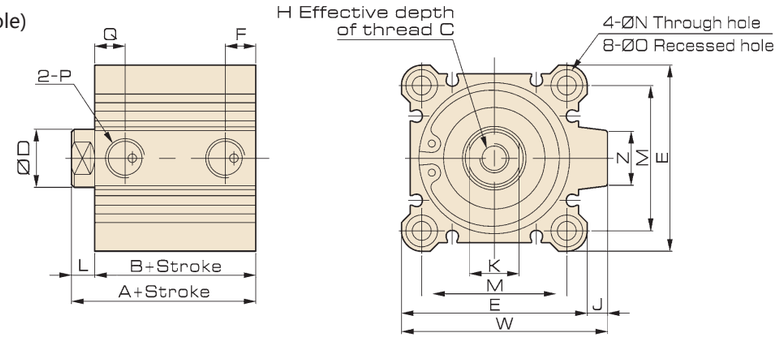

Male Piston Rod Thread

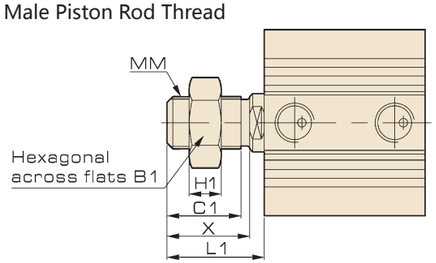

Both Ends of Thread
CQ2A / CDQ2A

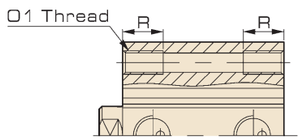

Dimension

Bore/Symbol	Stroke Range (mm)	Without magnet A	Without magnet B	Without magnet F	Without magnet Q	With magnet A	With magnet B	With magnet F	With magnet Q	C	D	E	H	J	K
32	5	30	23	6.5	7.5	40	33	7.5	10	13	16	45	M8×1.25	4.5	14
	10~50			7.5	10										
	50~100	40	33												
40	5	36.5	29.5	8	11	46.5	39.5	7.5	12.5	13	16	52	M8×1.25	5	14
	10~50			7.5	12.5										
	50~100	46.5	39.5												
50	5	38.5	30.5	9	9	48.5	40.5	10.5	10.5	15	20	64	M10×1.5	7	17
	10~50			10.5	10.5										
	50~100	48.5	40.5												
63	5	44	36	9.5	14	54	46	10.5	15	15	20	77	M10×1.5	7	17
	10~50			10.5	15										
	50~100	54	46												
80	5~50	53.5	43.5	12.5	16	63.5	53.5	12.5	16	21	25	98	M16×2	6	22
	50~100	63.5	53.5												
100	5~50	65	53	13	23	75	63	13	23	27	32	117	M20×2.5	6.5	27
	50~100	75	63												

Bore/Symbol	L	M	N	O	P	W	Z	B1	C1	H1	L1	MM	X	O1	R
32	7	34	5.5	9 deep 7	1/8	49.5	14	22	20.5	8	28.5	M14×1.5	23.5	M6×1	10
40	7	40	5.5	9 deep 7	1/8	57	15	22	20.5	8	28.5	M14×1.5	23.5	M6×1	10
50	8	50	6.6	11 deep 8	1/4	71	19	27	26	11	33.5	M18×1.5	28.5	M8×1.25	14
63	8	60	9	14 deep 10.5	1/4	84	19	27	26	11	33.5	M18×1.5	28.5	M10×1.5	18
80	10	77	11	17.5 deep 13.5	3/8	104	25	32	32.5	13	43.5	M22×1.5	35.5	M12×1.75	22
100	12	94	11	17.5 deep 13.5	3/8	123.5	25	41	32.5	13	43.5	M26×1.5	35.5	M12×1.75	22

ISO9001:2008 CE

Overall Dimension

Ø32~Ø100 Without magnet / With magnet

Spring-out (Thru hole)
CQ2SB / CDQ2SB

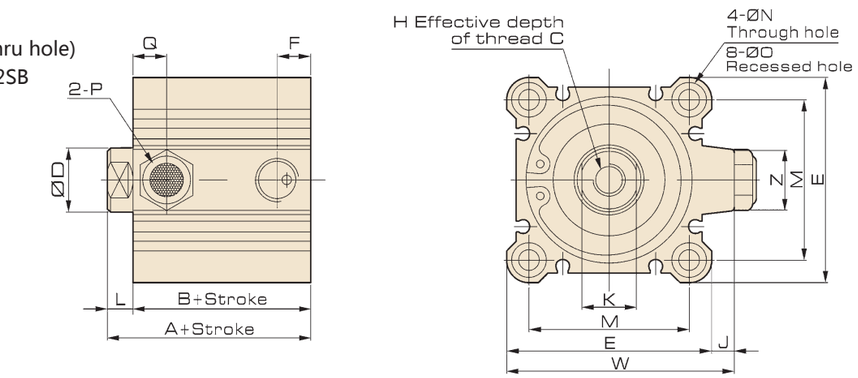

Male Piston Rod Thread

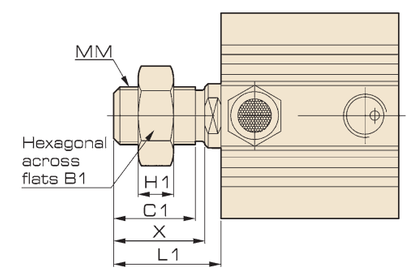

Both Ends of Thread
CQ2SA / CDQ2SA

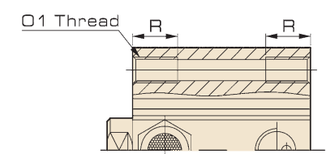

Dimension

Bore/Symbol	Stroke Range (mm)	Without magnet A	Without magnet B	Without magnet F	Without magnet Q	With magnet A	With magnet B	With magnet F	With magnet Q	C	D	E	H	J	K
32	5/10	40	33	7.5	10	50	43	7.5	10	13	16	45	M8×1.25	4.5	14
	15/20/25/30	50	43			60	53								
40	5/10	36.5	29.5	7.5	12.5	56.5	49.5	7.5	12.5	13	16	52	M8×1.25	5	14
	15/20/25/30	46.5	39.5			66.5	59.5								
50	5/10	38.5	30.5	10.5	10.5	58.5	50.5	10.5	10.5	15	20	64	M10×1.5	7	17
	15/20/25/30	48.5	40.5			68.5	60.5								
63	5/10	44	36	10.5	15	64	56	10.5	15	15	20	77	M10×1.5	7	17
	15/20/25/30	54	46			74	66								

Bore/Symbol	L	M	N	O	P	W	Z	B1	C1	H1	L1	MM	X	O1	R
12	7	34	5.5	9 deep 7	1/8	49.5	14	22	20.5	8	28.5	M14×1.5	23.5	M6×1	10
16	7	40	5.5	9 deep 7	1/8	57	15	22	20.5	8	28.5	M14×1.5	23.5	M6×1	10
20	8	50	6.6	11 deep 8	1/4	71	19	27	26	11	33.5	M18×1.5	28.5	M8×1.25	14
25	8	60	9	14 deep 10.5	1/4	84	19	27	26	11	33.5	M18×1.5	28.5	M10×1.5	18

Cylinder
Sizing
SI
SI A.
SIB
SQ
DNT
SC / SU
SCT
SC A.
SL
DN
DSN
DN/DSN A.
MA
MAC
MA/MAC A.
MAL
MALC
MAL/MACL A.
SDA
CQ2
TCQ2
ADN
TADN
PPRM
ZX
MHL2
Pneumatic Fingers
MXH
MXQ
CJP
CJ2
CDU
TN
CXS
MGP
MSQ

JELPC — China Pneumatic

ISO9001:2008 CE

CQ2 Series
Thin Type Cylinder

Overall Dimension

Ø32~Ø100 Without magnet / With magnet

Spring-out (Thru hole) CQ2TB / CDQ2TB

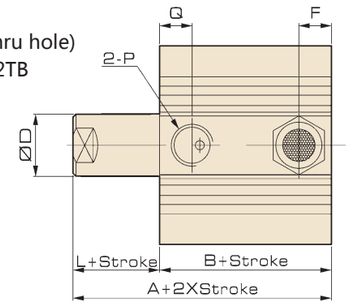

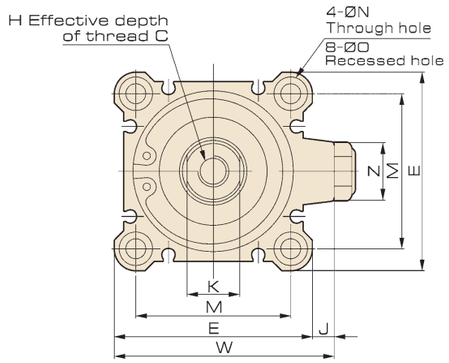

Male Piston Rod Thread

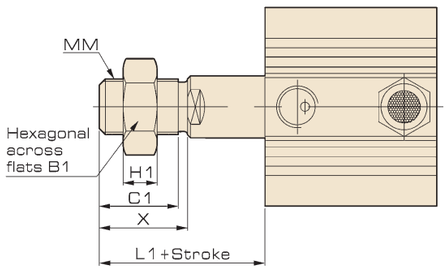

Both Ends of Thread CQ2TA / CDQ2TA

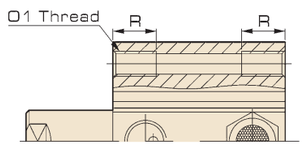

Dimension

Bore/Symbol	Stroke Range (mm)	Without magnet				With magnet				C	D	E	H	J	K
		A	B	F	Q	A	B	F	Q						
32	5/10	40	33	7.5	10	50	43	7.5	10	13	16	45	M8×1.25	4.5	14
	15/20/25/30	50	43			60	53								
40	5/10	36.5	29.5	7.5	12.5	56.5	49.5	7.5	12.5	13	16	52	M8×1.25	5	14
	15/20/25/30	46.5	39.5			66.5	59.5								
50	5/10	38.5	30.5	10.5	10.5	58.5	50.5	10.5	10.5	15	20	64	M10×1.5	7	17
	15/20/25/30	48.5	40.5			68.5	60.5								
63	5/10	44	36	10.5	15	64	56	10.5	15	15	20	77	M10×1.5	7	17
	15/20/25/30	54	46			74	66								

Bore/Symbol	L	M	N	O	P	W	Z	B1	C1	H1	L1	MM	X	O1	R
12	7	34	5.5	9 deep 7	1/8	49.5	14	22	20.5	8	28.5	M14×1.5	23.5	M6×1	10
16	7	40	5.5	9 deep 7	1/8	57	15	22	20.5	8	28.5	M14×1.5	23.5	M6×1	10
20	8	50	6.6	11 deep 8	1/4	71	19	27	26	11	33.5	M18×1.5	28.5	M8×1.25	14
25	8	60	9	14 deep 10.5	1/4	84	19	27	26	11	33.5	M18×1.5	28.5	M10×1.5	18

Overall Dimension

Ø32~Ø100 Without magnet / With magnet

Standard (Thru hole) CQ2WB / CDQ2WB

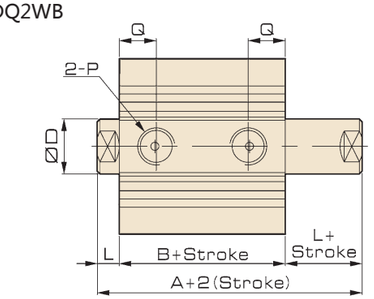

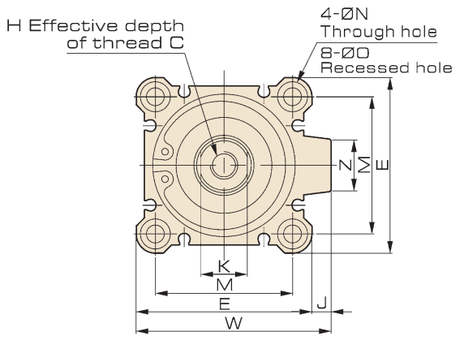

Male Piston Rod Thread

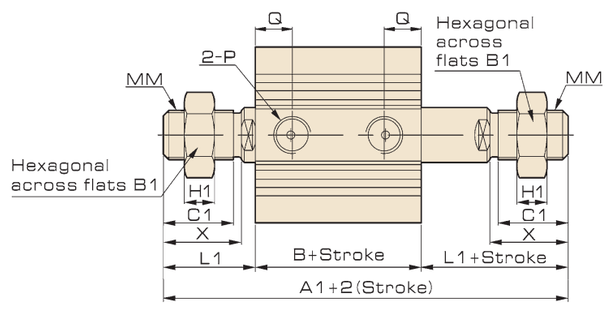

Both Ends of Thread CQ2WA / CDQ2WA

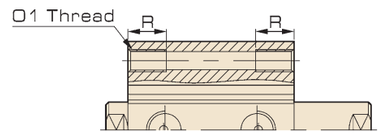

Dimension

Bore/Symbol	Stroke Range (mm)	Without magnet			With magnet			C	D	E	H	J	K	L	M	N	o
		A	A1	B	A	A1	B										
32	5~50	44.5	87.5	30.5	54.5	97.5	40.5	13	16	45	M8×1.25	4.5	14	7	34	5.5	9 deep 7
	50~100	54.5	97.5	40.5													
40	5~50	54	97	40	64	107	50	13	16	52	M8×1.25	5	14	7	40	5.5	9 deep 7
	50~100	64	107	50													
50	5~50	56.5	107.5	40.5	66.5	117.5	50.5	15	20	64	M10×1.5	7	17	8	50	6.6	11 deep 8
	50~100	66.5	117.5	50.5													
63	5 10~50	58	109	42	68	119	52	15	20	77	M10×1.5	7	17	8	60	9	14 deep 10.5
	50~100	68	119	52													
80	5~50	71	138	51	81	148	61	21	25	98	M16×2	6	22	10	77	11	17 deep 13.5
	50~100	81	148	61													
100	5~50	84.5	147.5	60.5	94.5	157.5	70.5	27	32	117	M20×2.5	6.5	27	12	94	11	17 deep 13.5
	50~100	94.5	157.5	70.5													

Bore/Symbol	P	Q	W	Z	B1	C1	H1	L1	MM	X	O1	R
32	1/8	10	49.5	14	22	20.5	8	28.5	M14×1.5	23.5	M6×1	10
40	1/8	13	57	15	22	20.5	8	28.5	M14×1.5	23.5	M6×1	10
50	1/4	13	71	19	27	26	11	33.5	M18×1.5	28.5	M8×1.25	14
63	1/4	Stroke 5mm: 14.5 Stroke10~50mm and 50~100mm: 16	84	19	27	26	11	33.5	M18×1.5	28.5	M10×1.5	18
80	3/8	16	104	25	32	32.5	13	43.5	M22×1.5	35.5	M12×1.75	22
100	3/8	20	123.5	25	41	32.5	16	43.5	M26×1.5	35.5	M12×1.75	22

Cylinder
Sizing
SI
SI A.
SIB
SQ
DNT
SC / SU
SCT
SC A.
SL
DN
DSN
DN/DSN A.
MA
MAC
MA/MAC A.
MAL
MALC
MAL/MACL A.
SDA
CQ2
TCQ2
ADN
TADN
PPRM
ZX
MHL2
Pneumatic Fingers
MXH
MXQ
CJP
CJ2
CDU
TN
CXS
MGP
MSQ

JELPC — China Pneumatic

Overall Dimension

Ø32~Ø100 Without magnet / With magnet

Standard (Thru hole) CQ2JB / CDQ2JB

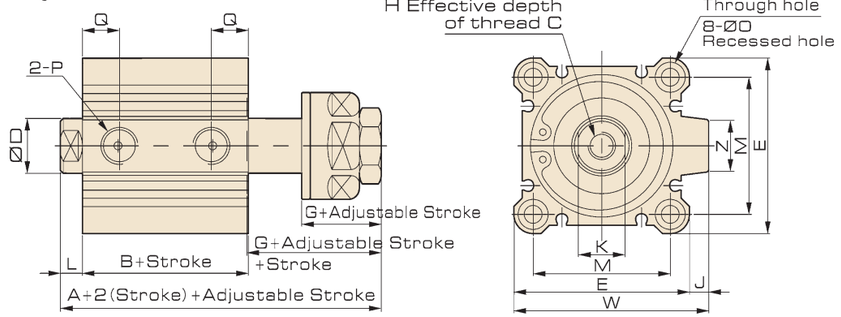

Male Piston Rod Thread

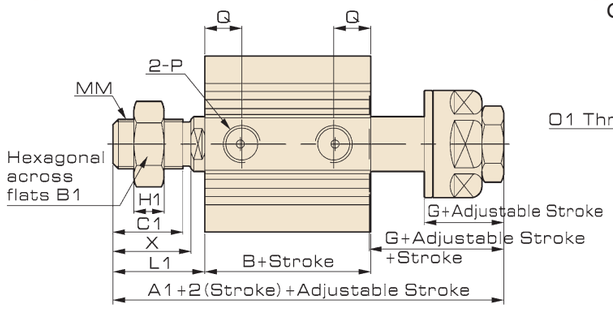

Both Ends of Thread CQ2JA / CDQ2JA

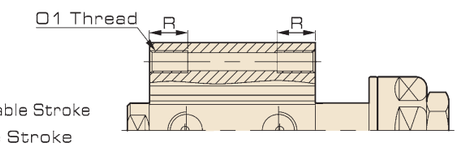

Dimension

Bore/Symbol	Stroke Range (mm)	Without magnet A	Without magnet A1	Without magnet B	With magnet A	With magnet A1	With magnet B	C	D	E	G	H	J	K	L	M	N
32	5~50	65	86.5	30.5	75	96.5	40.5	13	16	45	28	M8×1.25	4.5	14	7	34	5.5
	50~100	75	96.5	40.5													
40	5~50	74.5	96	40	84.5	106	50	13	16	52	28	M8×1.25	5	14	7	40	5.5
	50~100	84.5	106	50													
50	5~50	77	102.5	40.5	87	112.5	50.5	15	20	64	29	M10×1.5	7	17	8	50	6.6
	50~100	87	112.5	50.5													
63	5~50	78.5	104	42	88.5	114	52	15	20	77	29	M10×1.5	7	17	8	60	9
	50~100	88.5	114	52													
80	5~50	96	129.5	51	106	139.5	61	21	25	98	35.5	M16×2	6	22	10	77	11
	50~100	106	139.5	61													
100	5~50	114.5	146	60.5	124.5	156	70.5	27	32	117	42.5	M20×2.5	6.5	27	12	94	11
	50~100	124.5	156	70.5													

Bore/Symbol	O	P	Q	W	Z	B1	C1	H1	L1	MM	X	O1	R
32	9 deep 7	1/8	10	49.5	14	22	20.5	8	28.5	M14×1.5	23.5	M6×1	10
40	9 deep 7	1/8	13	57	15	22	20.5	8	28.5	M14×1.5	23.5	M6×1	10
50	11 deep 8	1/4	13	71	19	27	26	11	33.5	M18×1.5	28.5	M8×1.25	14
63	14 deep 10.5	1/4	Stroke 5~50mm : 14.5 Stroke 50~100mm : 16	84	19	27	26	11	33.5	M18×1.5	28.5	M10×1.5	18
80	17 deep 13.5	3/8	16	104	25	32	32.5	13	43.5	M22×1.5	35.5	M12×1.75	22
100	17 deep 13.5	3/8	20	123.5	25	41	32.5	16	43.5	M26×1.5	35.5	M12×1.75	22

ISO9001:2008 CE

Overall Dimension

Ø32~Ø100 Without magnet / With magnet

Cylinder with or without magnet is the same size

Both Ends of Thread CQ2A / CDQ2A

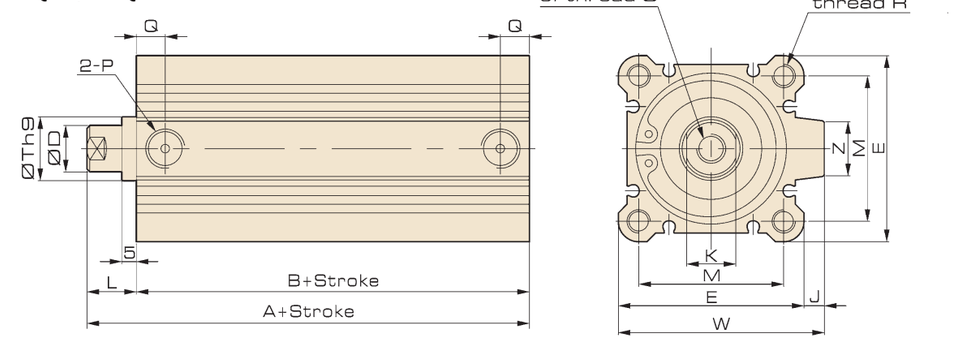

Male Piston Rod Thread

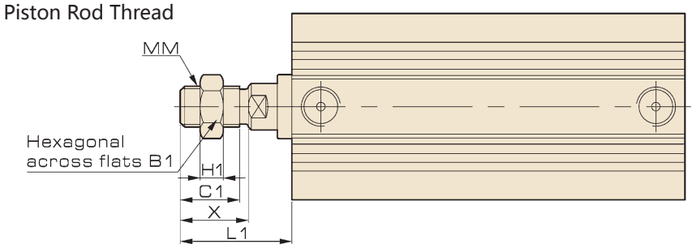

Dimension

Bore/Symbol	Stroke Range (mm)	A	B	C	D	E	H	J	K	L	M	P	Q
32	100~300	62.5	45.5	13	16	45	M8×1.25	4.5	14	17	34	1/8	12.5
40		72	55	13	16	52	M8×1.25	5	14	17	40	1/8	14
50		73.5	55.5	15	20	64	M10×1.5	7	17	18	50	1/4	14
63		75	57	15	20	77	M10×1.5	7	17	18	60	1/4	16.5
80		86	66	21	25	98	M16×2	6	22	20	77	3/8	19
100		97.5	75.5	27	32	117	M20×2.5	6.5	27	22	94	3/8	23

Bore/Symbol	W	Z	B1	C1	H1	L1	MM	X	O	R	Th9
32	49.5	14	22	20.5	8	38.5	M14×1.5	23.5	M6×1	10	$22^{0}_{-0.052}$
40	57	15	22	20.5	8	38.5	M14×1.5	23.5	M6×1	10	$28^{0}_{-0.052}$
50	71	19	27	26	11	43.5	M18×1.5	28.5	M8×1.25	14	$35^{0}_{-0.052}$
63	84	19	27	26	11	43.5	M18×1.5	28.5	M10×1.5	18	$35^{0}_{-0.052}$
80	104	25	32	32.5	13	53.5	M22×1.5	35.5	M12×1.75	22	$43^{0}_{-0.052}$
100	123.5	25	41	32.5	16	53.5	M26×1.5	35.5	M12×1.75	22	$59^{0}_{-0.052}$

JELPC — China Pneumatic

Ordering Code

T	C D Q2	-	C	-	32	x	30	-	MT
Function Code	Inner Magnet		Mounting		Bore		Stroke		Sensor
Thin type with guide cylinder	Blank: Without magnet D: With magnet		Counterbore with thread type		32 40 50 63 80 100		5-50 75,100		D-A93 * Standard wire is 1 meter, please order for other length

Specification

Bore (mm)		32	40	50	63	80	100
Operation		Double Acting					
Working Medium		Air					
Operating Pressure Range	Double Acting	0.1 ~ 1.0MPa					
Proof Pressure		1.5MPa					
Operating Temperature Range		-20 ~ 70℃					
Operating Speed Range	Double Acting	30 ~ 500mm/s	30 ~ 350mm/s		30 ~ 250mm/s		
Port Size		G1/8		G1/4		G3/8	

ISO9001:2008 CE

Cylinder
Sizing
SI
SI A.
SIB
SQ
DNT
SC / SU
SCT
SC A.
SL
DN
DSN
DN/DSN A.
MA
MAC
MA/MAC A.
MAL
MALC
MAL/MACL A.
SDA
CQ2
TCQ2
ADN
TADN
PPRM
ZX
MHL2
Pneumatic Fingers
MXH
MXQ
CJP
CJ2
CDU
TN
CXS
MGP
MSQ

Internal Structure

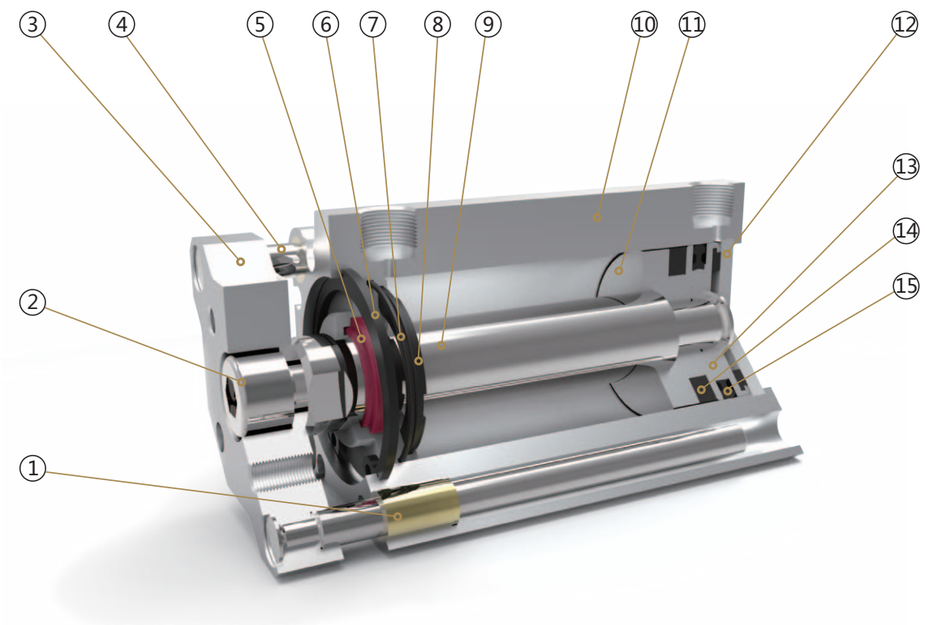

Parts

Number	Name	Number	Name
1	Copper tube	9	Piston rod
2	Socket head screw	10	Barrel
3	Fixed plate	11	Magnet base
4	Guide rod	12	Back cover
5	Dust ring	13	Piston
6	Circlips for holes	14	Magnet
7	O ring	15	C ring
8	Anti-collision gasket		

Overall Dimension

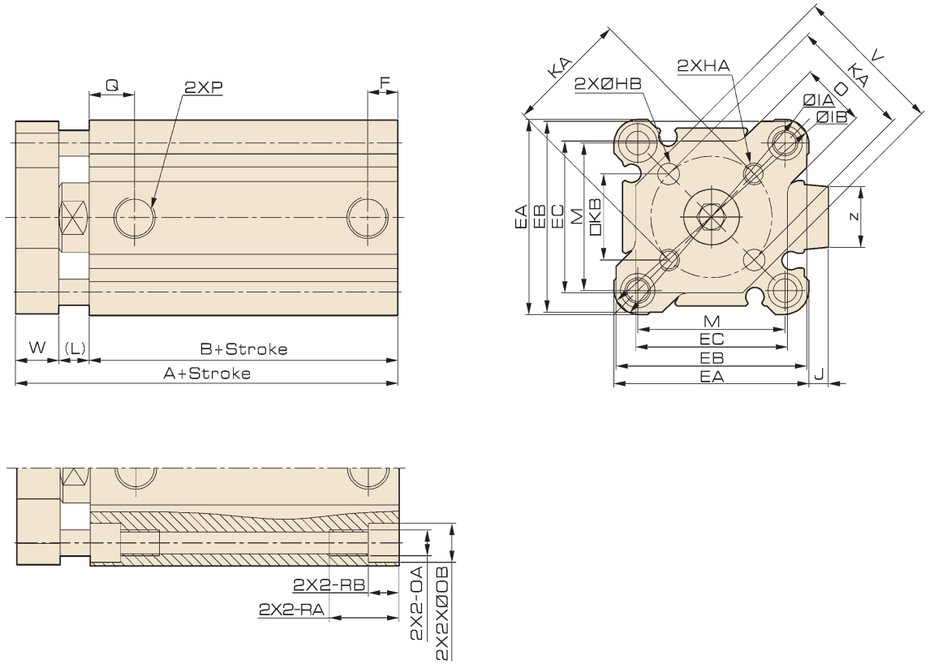

Dimension

Bore/ Symbol	Stroke Range (mm)	Without magnet							With magnet							EA	EB	EC
		A	B	F	Q	P —	P IN	P TF	A	B	F	Q	P —	P IN	P TF			
32	5	40	23	5.5	11.5	M5X0.8	–	–	50	33	7.5	10.5	G1/8	PT1/8	NPT1/8	45	44	35
	10-50			7.5	10.5	G1/8	PT1/8	NPT1/8										
	75、100	50	33															
40	5-50	46.5	29.5	8	11	G1/8	PT1/8	NPT1/8	56.5	39.5	8	11	G1/8	PT1/8	NPT1/8	52	51.5	38
	75、100	56.5	39.5															
50	5-50	50.5	30.5	10.5	10.5	G1/4	PT1/4	NPT1/4	56.5	39.5	10.5	10.5	G1/4	PT1/4	NPT1/4	62	61	48.5
	75、100	60.5	40.5															
63	5-50	56	36	10.5	15	G1/4	PT1/4	NPT1/4	66	46	10.5	15	G1/4	PT1/4	NPT1/4	77	76	59
	75、100	66	46															
80	5-50	67.5	43.5	12.5	16	G3/8	PT3/8	NPT3/8	77.5	53.5	12.5	15	G3/8	PT3/8	NPT3/8	98	97	75
	75、100	77.5	53.5															
100	5-50	79	53	13	23	G3/8	PT3/8	NPT3/8	89	63	13	23	G3/8	PT3/8	NPT3/8	117	116	92.5
	75、100	89	63															

Bore/Symbol	HA	OA	HB	IA	IB	J	KA	KB	L	M	N	OB	RA	RB	V	W	Z	O
32	M5X0.8	M6X1.0	$5^{+0.2}_{0}$	60	58.5	4.5	28±0.02	19.8	7	34	5.5	9	17	7	35	10	14	15
40	M5X0.8	M6X1.0	$5^{+0.2}_{0}$	69	67.5	5	33±0.02	23.3	7	40	5.5	9	17	7	42	10	14	15
50	M6X1.0	M8X1.25	$6^{+0.2}_{0}$	86	84.5	7	42±0.02	29.7	8	50	6.6	11	22	8	54.5	12	19	16
63	M6X1.0	M10X1.5	$6^{+0.2}_{0}$	103	100	7	50±0.02	35.4	8	60	9	14	28.5	10.5	68	12	19	19
80	M8X1.25	M12X1.75	$8^{+0.2}_{0}$	132	129	6	65±0.02	46	10	77	11	17.5	35.5	13.5	86	14	25	22
100	M10X1.5	M12X1.75	$10^{+0.2}_{0}$	156	153	6.5	80±0.02	56.6	10	94	11	17	35.5	13.5	108	16	25	25

ADN32x30-S

ADN40x30-S

ADN50x30-S

Features

1. ADN series compact cylinder accord with ISO21287 standard.
2. ADN series cylinder with compact structure, derived lots of variety types, and wide range of applications.
3. Both end use rubber gasket to absorb the remaining energy of the high speed movement and the machine cycle.
4. Every ammsebly way has large number of accessories, so it is very sample.

Ordering Code

ADN - 25 x 30 - 10 - S - B - LB - MT

Series
- ADN: Double acting

- ADND: Double-shaft type

- ADNJ: Double-shaft with adjustable stroke

Bore: 20, 25, 32, 40, 50, 63, 80, 100

Stroke: 5-200mm

Adjustable Stroke: 10: 10mm; 20: 20mm; 30: 30mm; 50: 50mm; 75: 75mm; 100: 100mm

Magnet: S: With magnet; Blank: Without magnet

Thread Type
- Blank: Female thread

- B: Male thread

Mountings
- Blank: Basic mountings
- LB: Front and back mounting

- FA: Front mounting flange; FB: Back mounting flange

- CA: Back clevis (Single earring)

- CB: Back hinge (Double earring)

- YB: Back hinge

Sensor
- D-Z73
- * Standard wire is 1 meter, please order for other length

Specification

Bore (mm)	20	25	32	40	50	63	80	100
Operation	Double Acting							
Working Medium	Air							
Operating Pressure Range	0.1～1.0MPa							
Proof Pressure	1.5MPa							
Operating Temperature Range	-20～70℃							
Operating Speed Range	30～500mm/s							
Port Size	M5x0.8		G1/8"					

Cylinder
Sizing
SI
SI A.
SIB
SQ
DNT
SC / SU
SCT
SC A.
SL
DN
DSN
DN/DSN A.
MA
MAC
MA/MAC A.
MAL
MALC
MAL/MACL A.
SDA
CQ2
TCQ2
ADN
TADN
PPRM
ZX
MHL2
Pneumatic Fingers
MXH
MXQ
CJP
CJ2
CDU
TN
CXS
MGP
MSQ

Cylinder
Sizing
SI
SI A.
SIB
SQ
DNT
SC / SU
SCT
SC A.
SL
DN
DSN
DN/DSN A.
MA
MAC
MA/MAC A.
MAL
MALC
MAL/MACL A.
SDA
CQ2
TCQ2
ADN
TADN
PPRM
ZX
MHL2
Pneumatic Fingers
MXH
MXQ
CJP
CJ2
CDU
TN
CXS
MGP
MSQ

Internal Structure

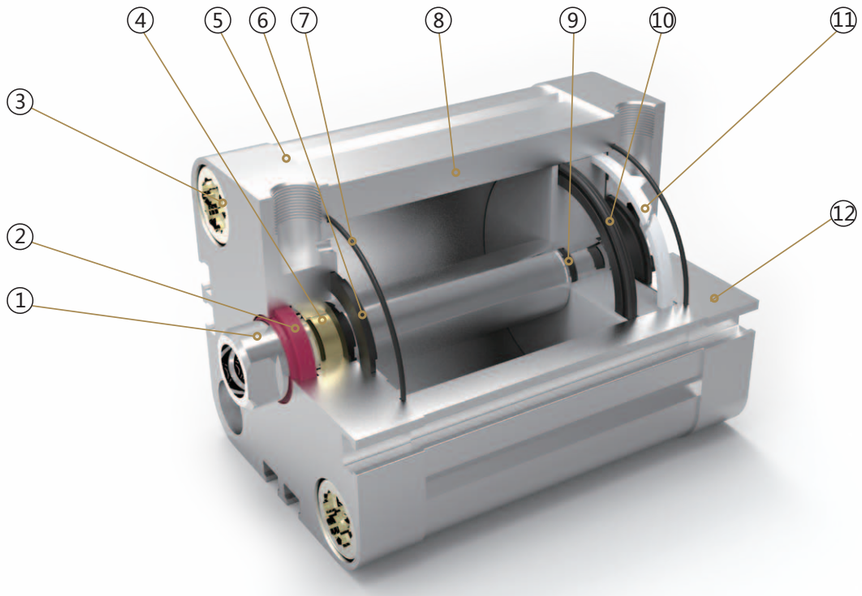

Parts

Number	Name	Number	Name
1	Piston rod	7	O ring
2	Shaft seal	8	Barrel
3	Cover screw	9	O ring
4	DU bearing	10	Piston seal
5	Front cover	11	Anti-friction seal
6	Anti-collision gasket	12	Back cover

ISO9001:2008 CE

ADN Series
New Compact Cylinder
(Conforms to ISO21287 Standard)

Overall Dimension

ADN Ø20~Ø100 Without magnet / With magnet

Standard female thread Ø20~Ø63

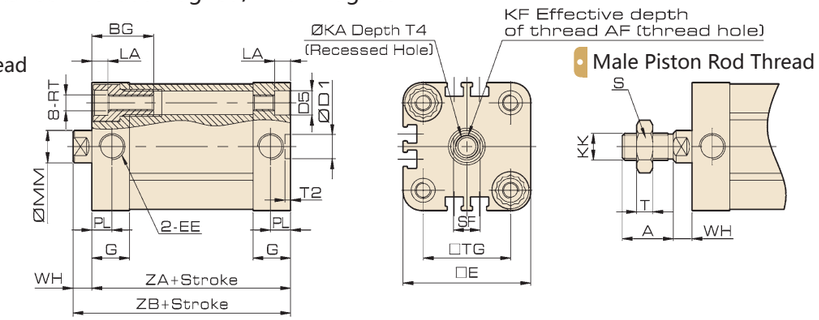

Male Piston Rod Thread

Standard female thread Ø80~Ø100

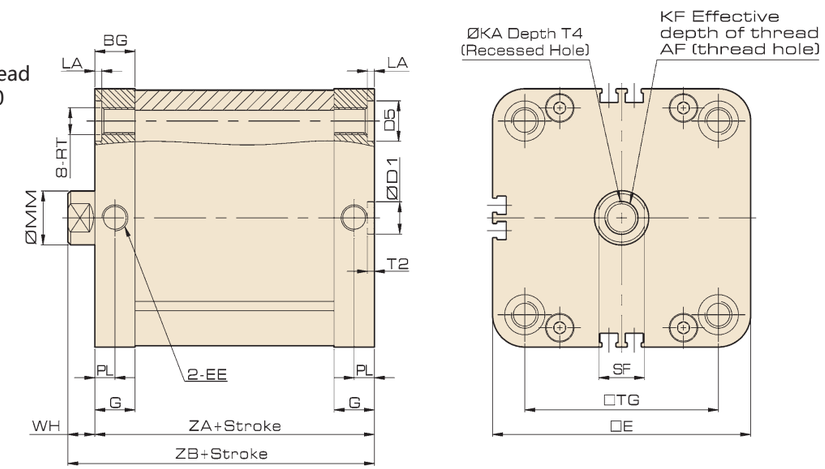

Dimension

Bore/Symbol	Stroke Range (mm)	A	AF	BG Min.	D1	D5	E	EE	G	KA	KF	KK	LA
20	5~200	16	14	15	9	9	36	M5	10.5	6.5	M6×1	M8×1.25	5
25							40		11				
32		19	16	16			47.5	G1/8	14	8.5	M8×1.25	M10×1.25	
40							55						
50		22	20		12	12	66			10.5	M10×1.5	M12×1.25	
63							78.3						
80		28		17		-	96		15	12.5	M12×1.75	M16×1.5	-
100							116		21				

Bore/Symbol	MM	PL	RT	S	SF	T	T2	T4	TG	WH	ZA	ZB
20	10	5	M5×0.8	12	9	5	2.1	2.6	22	6	37	43
25									26		39	45
32	12	7.5	M6×1	17	10	6		3.3	32.5	7	44	51
40									38		45	52
50	16		M8×1.25		13	7	2.6	4.7	46.5	8		53
63									56.5		49	57
80	20		M10×1.5	23	17	8		6.1	72	10	54	64
100									89		67	77

JELPC® | JELPC — China Pneumatic

Overall Dimension

ADND Ø20~Ø100 Without magnet / With magnet

Double shaft with female thread Ø20~Ø63

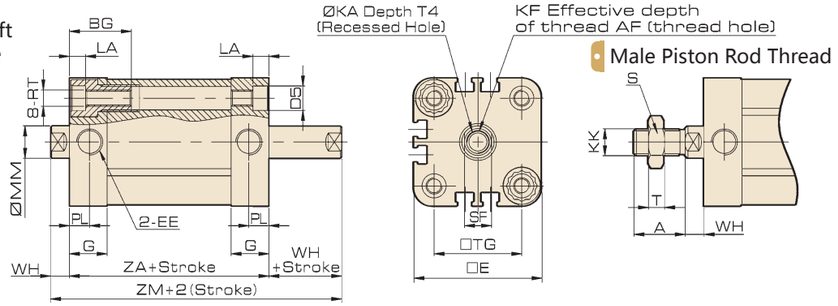

Double shaft with female thread Ø80~Ø100

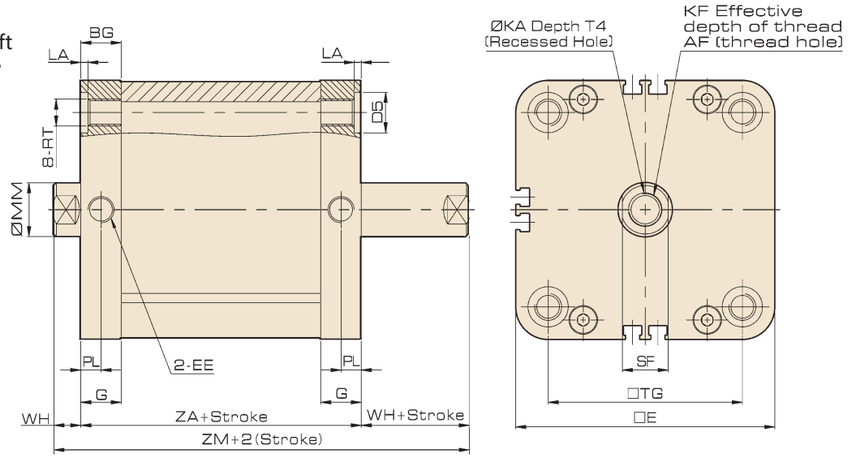

Dimension

Bore/Symbol	Stroke Range (mm)	A	AF	BG Min.	D5	E	EE	G	KA	KF	KK	LA
20	5~200	16	14	15	9	36	M5	10.5	6.5	M6×1	M8×1.25	5
25						40		11				
32		19	16	16		47.5	G1/8	14	8.5	M8×1.25	M10×1.25	
40						55						
50		22	20		12	66			10.5	M10×1.5	M12×1.25	
63						78.3						
80		28		17	-	96		15	12.5	M12×1.75	M16×1.5	-
100						116		21				

Bore/Symbol	MM	PL	RT	S	SF	T	T4	TG	WH	ZA	ZM
20	10	5	M5×0.8	12	9	5	2.6	22	6	37	43
25								26		39	45
32	12	7.5	M6×1	17	10	6	3.3	32.5	7	44	58
40								38		45	59
50	16		M8×1.25		13	7	4.7	46.5	8		61
63								56.5		49	65
80	20		M10×1.5	23	17	8	6.1	72	10	54	74
100								89		67	87

ISO9001:2008 CE

ADN Series
New Compact Cylinder
(Conforms to ISO21287 Standard)

Overall Dimension

ADNJ Ø20~Ø100 Without magnet / With magnet

Adjustable with female thread Ø20~Ø63

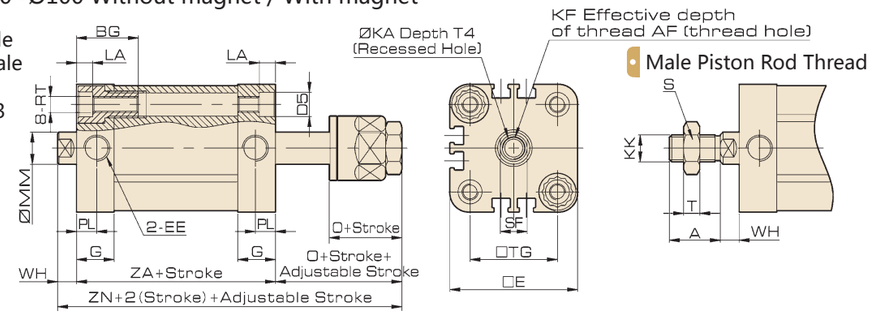

Adjustable with female thread Ø80~Ø100

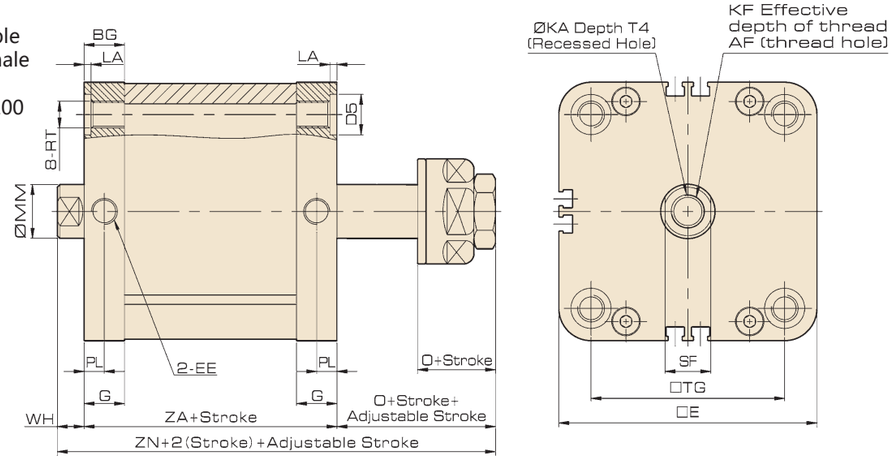

Dimension

Bore/Symbol	Stroke Range (mm)	A	AF	BG Min.	D5	E	EE	G	KA	KF	KK	LA
20	5~200	16	14	15	9	36	M5	10.5	6.5	M6×1	M8×1.25	5
25						40		11				
32		19	16	16		47.5	G1/8	14	8.5	M8×1.25	M10×1.25	
40						55						
50		22	20		12	66			10.5	M10×1.5	M12×1.25	
63						78.3						
80		28		17	-	96		15	12.5	M12×1.75	M16×1.5	-
100						116		21				

Bore/Symbol	MM	O	PL	RT	S	SF	T	T4	TG	WH	ZA	ZN
20	10	19	5	M5×0.8	12	9	5	2.6	22	6	37	62
25									26		39	64
32	12	27	7.5	M6×1	17	10	6	3.3	32.5	7	44	78
40									38		45	79
50	16	28		M8×1.25		13	7	4.7	46.5	8		81
63									56.5		49	85
80	20	29		M10×1.5	23	17	8	6.1	72	10	54	93
100									89		67	96

Cylinder
Sizing
SI
SI A.
SIB
SQ
DNT
SC / SU
SCT
SC A.
SL
DN
DSN
DN/DSN A.
MA
MAC
MA/MAC A.
MAL
MALC
MAL/MACL A.
SDA
CQ2
TCQ2
ADN
TADN
PPRM
ZX
MHL2
Pneumatic Fingers
MXH
MXQ
CJP
CJ2
CDU
TN
CXS
MGP
MSQ

JELPC® | JELPC — China Pneumatic

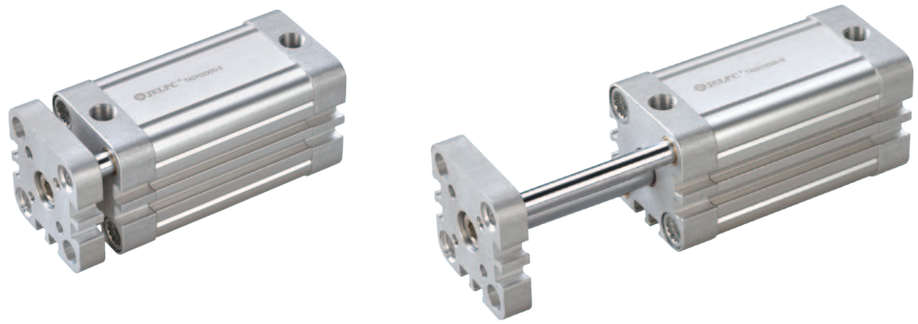

Ordering Code

TADN	-	25	x	30	-	S	-	MT
Series		Bore		Stroke		Magnet		Sensor
TADN : Double acting type guide		20 25 32 40 50 63 80 100				Blank: Without magnet S: With magnet		D-Z73 * Standard wire is 1 meter, please order for other length

Specification

Bore (mm)	20	25	32	40	50	63	80	100
Operation	Double Acting							
Working Medium	Air							
Standard Stroke	5～100mm							
Operating Pressure Range	0.1～1.0MPa							
Proof Pressure	1.5MPa							
Operating Temperature Range	-20～70℃							
Operating Speed Range	30～500mm/s							
Port Size	G1/8							

ISO9001:2008 CE

Cylinder
Sizing
SI
SI A.
SIB
SQ
DNT
SC / SU
SCT
SC A.
SL
DN
DSN
DN/DSN A.
MA
MAC
MA/MAC A.
MAL
MALC
MAL/MACL A.
SDA
CQ2
TCQ2
ADN
TADN
PPRM
ZX
MHL2
Pneumatic Fingers
MXH
MXQ
CJP
CJ2
CDU
TN
CXS
MGP
MSQ

Internal Structure

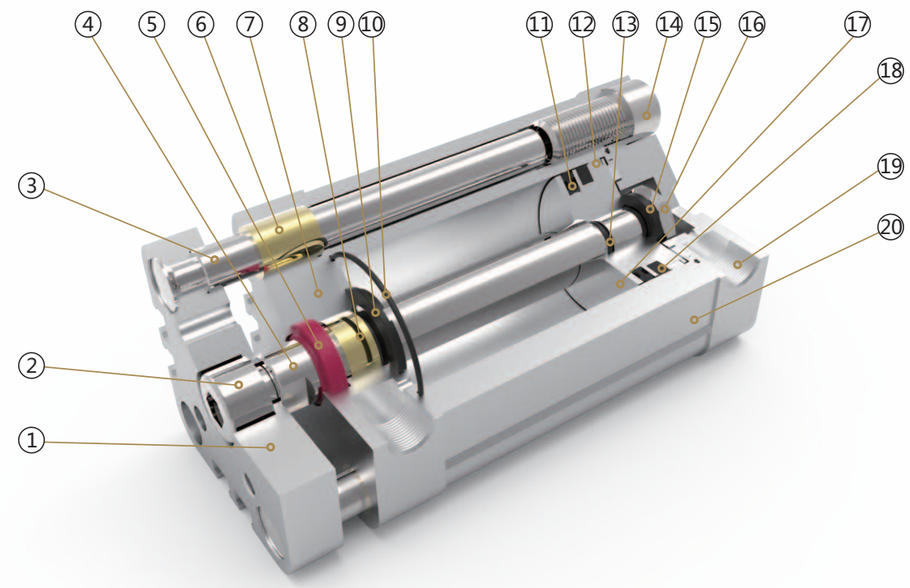

Parts

Number	Name	Number	Name
1	Fixed plate	11	C ring
2	Socket head screw	12	Anti-friction seal
3	Guide rod	13	O ring
4	Piston rod	14	Cover screw
5	Dust ring	15	Small gasket
6	Copper tube	16	Hexagon nut
7	Front cover	17	Piston
8	Bearing	18	Magnet
9	Anti-collision gasket	19	Back cover
10	O ring	20	Barrel

JELPC — China Pneumatic

ISO9001:2008 CE

Cylinder
Sizing
SI
SI A.
SIB
SQ
DNT
SC / SU
SCT
SC A.
SL
DN
DSN
DN/DSN A.
MA
MAC
MA/MAC A.
MAL
MALC
MAL/MACL A.
SDA
CQ2
TCQ2
ADN
TADN
PPRM
ZX
MHL2
Pneumatic Fingers
MXH
MXQ
CJP
CJ2
CDU
TN
CXS
MGP
MSQ

Overall Dimension

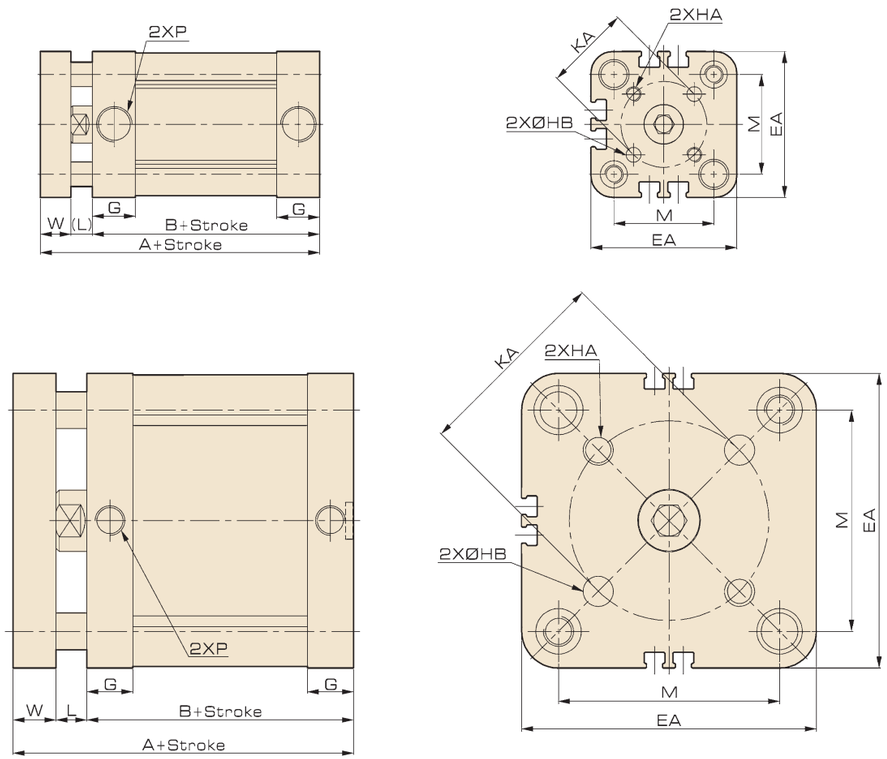

Dimension

Bore Symbol	Stroke Range (mm)	With magnet					EA	M	HA	HB	KA	L	W
		A	B	P									
				—	IN	TF							
20	5-100	51	37	M5X0.8			36	22	M4X0.7	$4^{+0.2}_{0}$	17±0.02	6	8
25	5-100	53	39	M5X0.8			40	26	M5X0.8	$5^{+0.2}_{0}$	22±0.02	6	8
32	5-100	61	44	G1/8	PT1/8	NPT1/8	47.5	32.5	M5X0.8	$5^{+0.2}_{0}$	28±0.02	7	10
40	5-100	62	45	G1/8	PT1/8	NPT1/8	55	38	M5X0.8	$5^{+0.2}_{0}$	33±0.02	7	10
50	5-100	65	45	G1/8	PT1/8	NPT1/8	66	46.5	M6X1.0	$6^{+0.2}_{0}$	42±0.02	8	12
63	5-100	69	49	G1/8	PT1/8	NPT1/8	78.3	56.5	M6X1.0	$6^{+0.2}_{0}$	50±0.02	8	12
80	5-100	78	54	G1/8	PT1/8	NPT1/8	96	72	M8X1.25	$8^{+0.2}_{0}$	65±0.02	10	14
100	5-100	91	67	G1/8	PT1/8	NPT1/8	116	89	M10X1.5	$10^{+0.2}_{0}$	80±0.02	10	14

Features

1. Rotation angle 90+.
2. The cylinder stretched out the double force, effectively increase the cylinder output requirements.
3. The new power connection mechanism reduces the connecting pipe.
4. The front piston shaft hole is pressed with an engineering plastic bearing, which can effectively reduce the friction between the shaft and the shaft hole.
5. Piston seals adopt special composite materials to provide a longer service life when the cylinder expectancy of the load.
6. The connecting plate adopts a stainless steel screw sleeve, which can effectively increase the service life of the screw hole.

Ordering Code

PPRM	-	32	-	WL	-	MT
Specification		Bore		Type		Sensor
PPRM: Elbow cylinder		32 40 50		Blank: Without Lock WL: With Lock		D-A93 * Standard wire is 1 meter, please order for other length

Specification

Model	PPRM-32WL	PPRM-40WL	PPRM-50WL
Port Size	M5×0.8		
Working Medium	40 Micron Filtered Air		
Operating Pressure	0.2~0.8MPa		
Max. Test Pressure	20MPa		
Operating Temperature	-20~120℃		
Rotation Angle	90°		
Adjustable Angle	±2°	±4°	±3°
When the pressure 0.6 MPa, the torque of the cylinder	> 9.5Nm	> 24Nm	> 45Nm
Weight	500g	1050g	1635g

Cylinder
Sizing
SI
SI A.
SIB
SQ
DNT
SC / SU
SCT
SC A.
SL
DN
DSN
DN/DSN A.
MA
MAC
MA/MAC A.
MAL
MALC
MAL/MACL A.
SDA
CQ2
TCQ2
ADN
TADN
PPRM
ZX
MHL2
Pneumatic Fingers
MXH
MXQ
CJP
CJ2
CDU
TN
CXS
MGP
MSQ

JELPC — China Pneumatic

Internal Structure

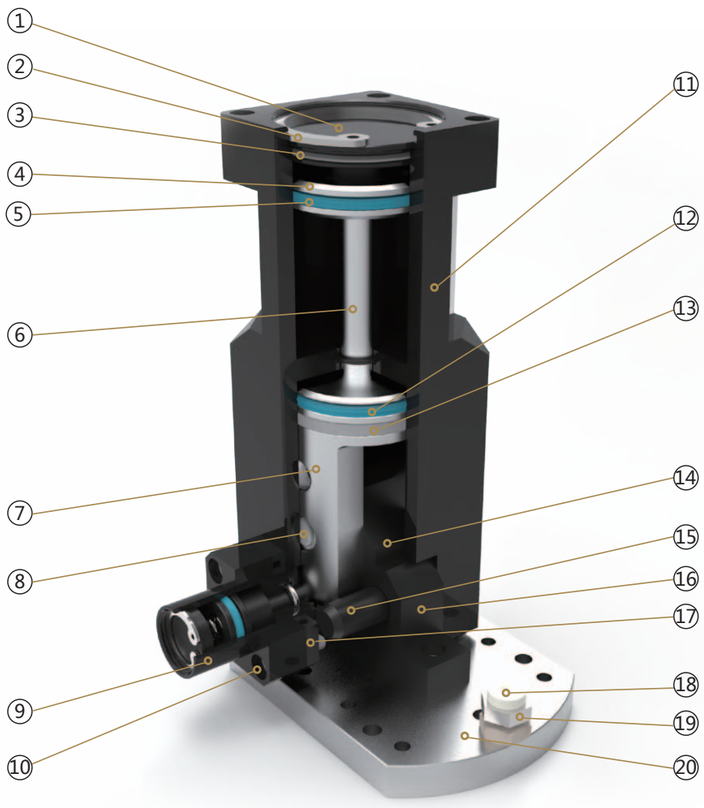

Parts

Number	Name	Number	Name	Number	Name
1	Back cover	8	Bearing	15	Long pin
2	Circlips for holes	9	Lock	16	Connecting base
3	O ring	10	Socket head cap screw	17	Spacer
4	Small piston	11	Barrel	18	Anti-collision gasket
5	C ring	12	Y ring	19	Anti-collision screw
6	Piston rod	13	Magnet	20	Connecting plate
7	Big piston	14	Pin		

ISO9001:2008 CE

Overall Dimension

PPRM-32WL

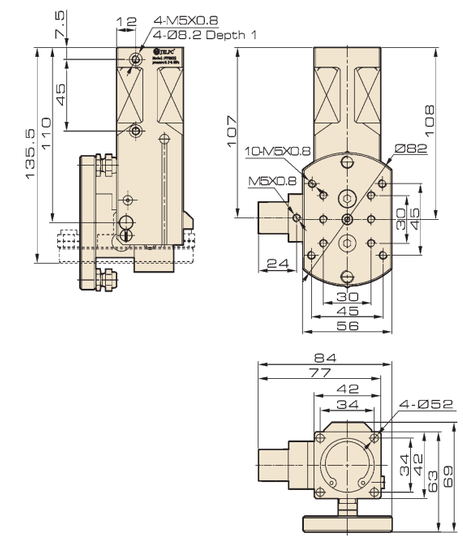

PPRM-40WL

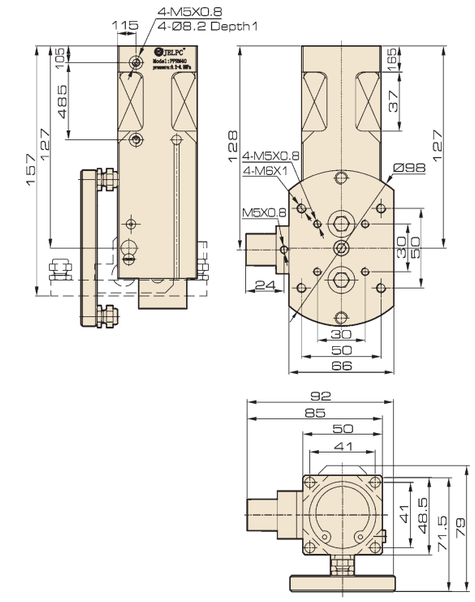

PPRM-50WL

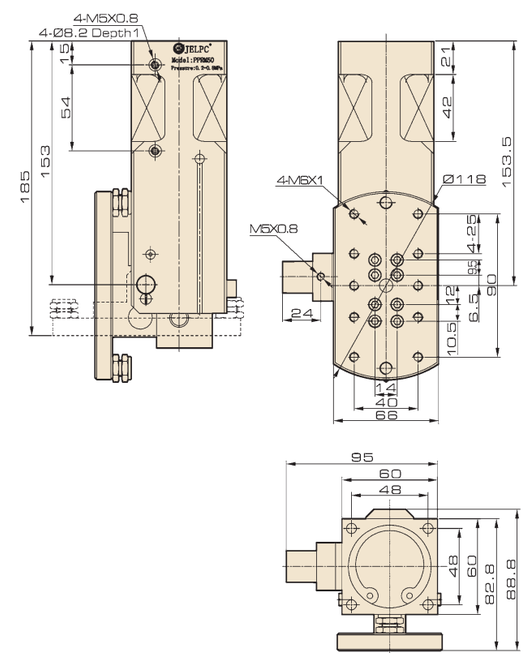

Cylinder
Sizing
SI
SI A.
SIB
SQ
DNT
SC / SU
SCT
SC A.
SL
DN
DSN
DN/DSN A.
MA
MAC
MA/MAC A.
MAL
MALC
MAL/MACL A.
SDA
CQ2
TCQ2
ADN
TADN
PPRM
ZX
MHL2
Pneumatic Fingers
MXH
MXQ
CJP
CJ2
CDU
TN
CXS
MGP
MSQ

Cylinder
Sizing
SI
SI A.
SIB
SQ
DNT
SC / SU
SCT
SC A.
SL
DN
DSN
DN/DSN A.
MA
MAC
MA/MAC A.
MAL
MALC
MAL/MACL A.
SDA
CQ2
TCQ2
ADN
TADN
PPRM
ZX
MHL2
Pneumatic Fingers
MXH
MXQ
CJP
CJ2
CDU
TN
CXS
MGP
MSQ

End Stroke Adjustment

Adjusts the angles β,
Use the wrench open
CH1 CH2 is 12mm.

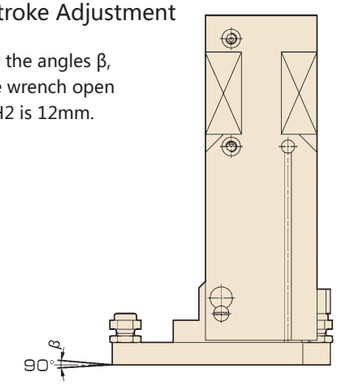

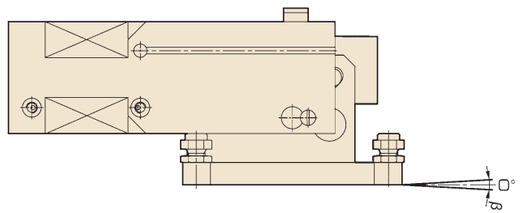

Torque and Safety Load

Torque depends on the rotation Angle and its maximum value between 0 ° to 90 °;
From 90 to 0 double torque, output doubled;
Torque decreases from 0 to 90.
Maximum load force (F)
Maximum load torque (Mf)

	PPRM -32WL	PPRM -40WL	PPRM -50WL
Mf	4Nm	7Nm	10Nm
F	1000N	1000N	1000N

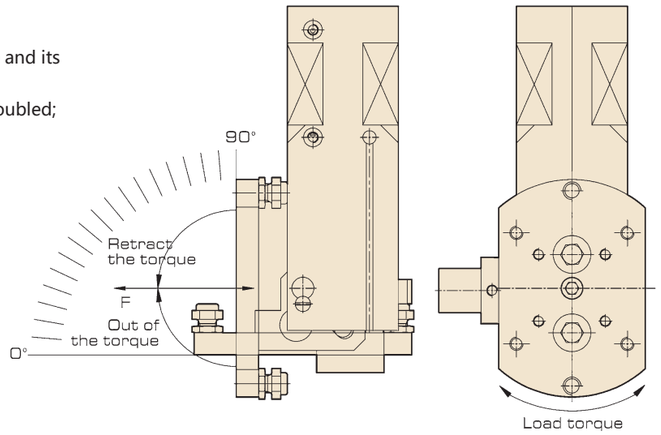

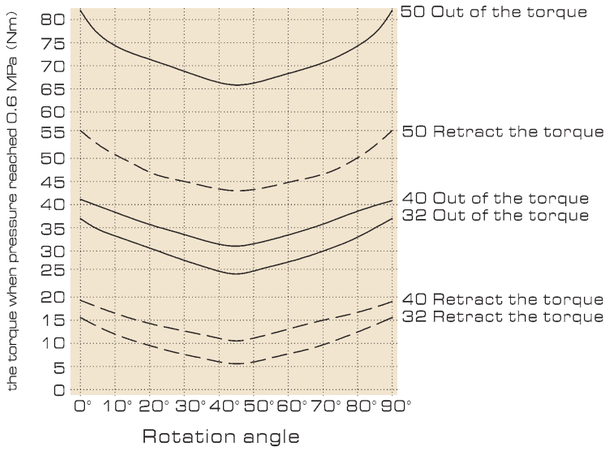

ZX-K

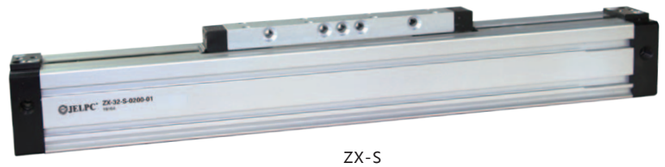

ZX-S

Features

Double-acting rodless cylinders are with adjustable cushion and permanent magnets.
The non-rotating piston can guide the workpiece running back and forth.
Sensor switches can be installed directly in the groove of the aluminum alloy barrel.
This series of cylinders can be used in explosion-proof design.
According to the 94/9/EG(ATEX) standard, if you need further understanding, please refer to the pneumatic and explosion-proof related directives.

Ordering Code

ZX	-	25	-	K	-	0500	-	01	-	ZXB-01	-	MT
Series		Bore		Type		Stroke		Air Supply Port		Mounting Bracket		Sensor Switch
		25		K : Short Slide Type				01 : Side Intake		ZXB-01		JEL-30R
		32		S : Standard Slide Type				02 : Port Intake		ZXB-02		
		40										
		50										
		63										

* Standard wire is 1 meter, please order for other length

Symbol

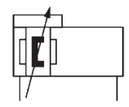

Specification

Bore (mm)	25	32	40	50	63
Operation	Double Acting				
Working Medium	Air				
Operating Pressure Range	1～9.0kgf/cm²				
Proof Pressure	10.5kgf/cm²				
Operating Temperature Range	-20～80℃				
Operating Speed Range	30~500mm/s			30~350mm/s	
Stroke Length	Arbitrary up to 6000mm		Max. 5950mm	Max. 5910mm	Max. 5860mm
Port Size	G1/8	G1/8	G1/4	G3/8	G3/8

Cylinder
Sizing
SI
SI A.
SIB
SQ
DNT
SC / SU
SCT
SC A.
SL
DN
DSN
DN/DSN A.
MA
MAC
MA/MAC A.
MAL
MALC
MAL/MACL A.
SDA
CQ2
TCQ2
ADN
TADN
PPRM
ZX
MHL2
Pneumatic Fingers
MXH
MXQ
CJP
CJ2
CDU
TN
CXS
MGP
MSQ

Force and Torque Instructions

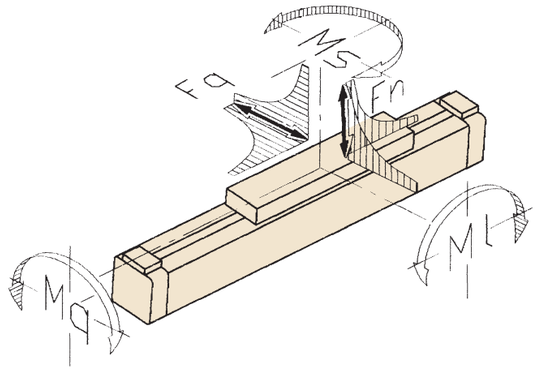

Max. Force and Torque Parameters

Model	Force*	Fn Max.	Fq Max.	Ml Max.	Mq Max.	Ms Max.
ZX-25-S	255 N (57 lbf)	270 N (61 lbf)	-	13 Nm (9.59 ft. lbf.)	2.5 Nm (1.84 ft. lbf.)	11 Nm (8.11 ft. lbf.)
ZX-25-K	255 N (57 lbf)	270 N (61 lbf)	-	8 Nm (5.90 ft. lbf.)	2.0 Nm (1.47 ft. lbf.)	7 Nm (5.16 ft. lbf.)
ZX-32-S	420 N (94 lbf)	300 N (67 lbf)	-	30 Nm (22.1 ft. lbf.)	3.0 Nm (2.21 ft. lbf.)	24 Nm (17.7 ft. lbf.)
ZX-32-K	420 N (94 lbf)	300 N (67 lbf)	-	15 Nm (11.1 ft. lbf.)	3.0 Nm (2.21 ft. lbf.)	12 Nm (8.85 ft. lbf.)
ZX-40-S	655 N (147 lbf)	650 N (146 lbf)	-	60 Nm (44.2 ft. lbf.)	4.0 Nm (2.95 ft. lbf.)	54 Nm (39.8 ft. lbf.)
ZX-40-K	655 N (147 lbf)	650 N (146 lbf)	-	30 Nm (22.1 ft. lbf.)	4.0 Nm (2.95 ft. lbf.)	27 Nm (19.9 ft. lbf.)
ZX-50-S	1000 N (225 lbf)	800 N (180 lbf)	-	80 Nm (59.0 ft. lbf.)	17.0 Nm (12.5 ft. lbf.)	74 Nm (54.6 ft. lbf.)
ZX-50-K	1000 N (225 lbf)	800 N (180 lbf)	-	38 Nm (28.0 ft. lbf.)	17.0 Nm (12.5 ft. lbf.)	32 Nm (23.6 ft. lbf.)
ZX-63-S	1600 N (360 lbf)	1400 N (315 lbf)	-	110 Nm (81.0 ft. lbf.)	17.0 Nm (12.5 ft. lbf.)	100 Nm (73.7 ft. lbf.)
ZX-63-K	1600 N (360 lbf)	1400 N (315 lbf)	-	50 Nm (36.8 ft. lbf.)	17.0 Nm (12.5 ft. lbf.)	48 Nm (35.4 ft. lbf.)

To avoid extra tension or gap in the guiding system, the mounting surface of the mounting part must not exceed a straight line tolerance of 0.1 mm.

Max. Friction at composed load

If more than one force and torque occur simultaneously, they must be calculated as follows:

$$\frac{Fn}{Fn_{Max.}} + \frac{Fq}{Fq_{Max.}} + \frac{Ml}{Ml_{Max.}} + \frac{Mq}{Mq_{Max.}} + \frac{Ms}{Ms_{Max.}} \leq 1$$

The calculation of force and torque refers to the speed of the guide rail. The speed of the sliding guide rail (S, K series) should be ≤ 0.2 m/s (0.656 ft/s).
If the speed exceeds the permissible value of 0.2 m/s (0.656 ft/s) for the sliding guide rail, multiply the load factor (see table on the right).
As for ZX-S and ZX-K cylinder, the torque parameters are given in the center of the slider, i.e. the center of the tube. The type of sliding guide rail, the center point of the guide rail is in the slider.

*Operating force is 6 bar (87 psi).

Load Factor

V in m/s	V in ft/s	Factor
0.2	0.656	1
0.3	0.984	0.75
0.4	1.312	0.5
0.5	1.640	0.4
0.75	2.460	0.27
1	3.281	0.2

Overall Dimension

ZX-K

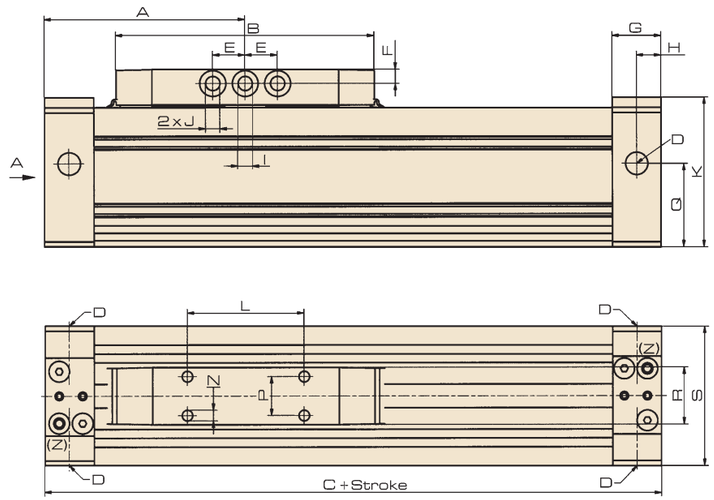

A View

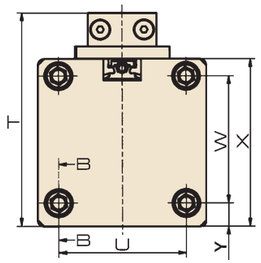

Cross Section B-B

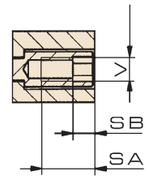

SA=Depth of thread
SB= Length of hexagonal head
(Z)=Cushion adjustment screw
The drawing shows the air supply port at both pressure ends is 01 type.

Dimension

Bore/Symbol	A	B	C	D	E	F	G	H	I	J	K	L
25	67.5	84.6	135	G1/8	12.5	5	19	9.5	6 H7	4.5	49	35
32	77.5	99.6	155	G1/8	12.5	5.5	19	9.5	6 H7	5.5	58	45
40	95	112.6	190	G1/4	12.5	7	23	11.5	7 H7	6.5	68	50
50	105	122	210	G3/8	17.5	9	30	17	10 H7	8.5	94	64
63	125	150	250	G3/8	25	9.5	30	17	10 H7	8.5	110	80

Bore/Symbol	N	P	Q	R	S	T	U	V	W	X	Y	SA	SB
25	M5 x 7 mm Depth	15	25	22	45	60	36	M4	36	45	4.5	11	3
32	M5 x 7 mm Depth	15	32.3	22	54	69	41	M5	41	54	7.5	11	4
40	M5 x 9 mm Depth	15	38.3	22	64	82	49	M6	49	64	7.5	12	4
50	M8 x 16 mm Depth	34	59	46	90	115	65	M8	65	90	12.5	17	5
63	M8 x 16 mm Depth	34	68.4	46	106	131	78	M8	78	106	14	17	5

Cylinder
Sizing
SI
SI A.
SIB
SQ
DNT
SC / SU
SCT
SC A.
SL
DN
DSN
DN/DSN A.
MA
MAC
MA/MAC A.
MAL
MALC
MAL/MACL A.
SDA
CQ2
TCQ2
ADN
TADN
PPRM
ZX
MHL2
Pneumatic Fingers
MXH
MXQ
CJP
CJ2
CDU
TN
CXS
MGP
MSQ

Cylinder
Sizing
SI
SI A.
SIB
SQ
DNT
SC / SU
SCT
SC A.
SL
DN
DSN
DN/DSN A.
MA
MAC
MA/MAC A.
MAL
MALC
MAL/MACL A.
SDA
CQ2
TCQ2
ADN
TADN
PPRM
ZX
MHL2
Pneumatic Fingers
MXH
MXQ
CJP
CJ2
CDU
TN
CXS
MGP
MSQ

Overall Dimension

ZX-S

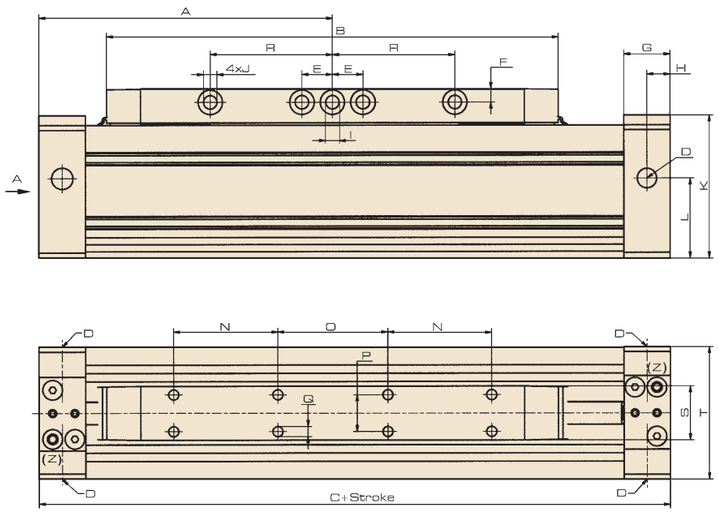

A View

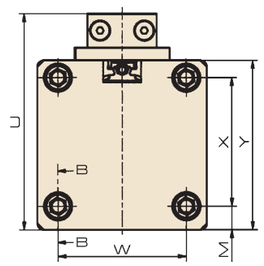

Cross Section B-B

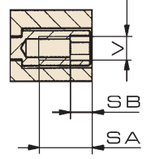

SA=Depth of thread
SB= Length of hexagonal head
(Z)=Cushion adjustment screw
The drawing shows the air supply port at both pressure ends is 01 type.

Dimension

Bore/Symbol	A	B	C	D	E	F	G	H	I	J	K	L	M	N
25	100	149.6	200	G1/8	12.5	5	19	9.5	6 H7	4.5	49	25	4.5	20
32	120	184.5	240	G1/8	12.5	5.5	19	9.5	6 H7	5.5	58	32.3	7.5	42.5
40	150	222.6	300	G1/4	12.5	7	23	11.5	7 H7	6.5	68	38.2	7.5	35
50	175	262	350	G3/8	17.5	9	30	17	10	8.5	94	59	12.5	45
63	200	300	400	G3/8	25	9.5	30	17	10	8.5	110	68.4	14.0	80

Bore/Symbol	O	P	Q	R	S	T	U	V	W	X	Y	SA	SB
25	50	15	M5 x 7 mm 深	35	22	45	60	M4	36	36	45	11	3
32	45	15	M5 x 7 mm 深	50	22	54	69	M5	41	41	54	11	4
40	90	15	M5 x 9 mm 深	65	22	64	82	M6	49	49	64	12	4
50	60	34	M8 x 16 mm 深	90	46	90	115	M8	65	65	90	17	5
63	80	34	M8 x 16 mm 深	90	46	106	131	M8	78	78	106	17	5

ZXB-01 Head mounting

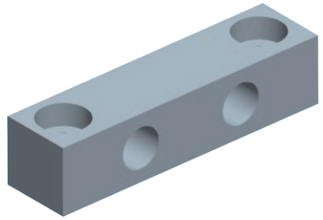

Material: Aluminum (oxidation)
Cylinder mounting head screws are included.
When using head mounting, the port of the surface must be blocked.

Overall Dimension

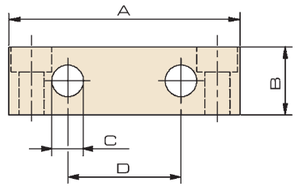

Dimension

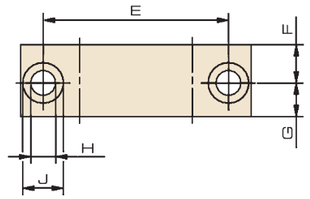

Bore/Symbol	A	B	C	D	E	F	G	H	J
25	45	10	5.5	22	36	4.5	5.5	4.5	7.4
32	51	15	7	25	41	7.5	8.5	5.5	9
40	64	15	9	25	49	7.5	8.5	6.5	11
50	89	15	8.5	40	65	12.5	13.5	8.5	15
63	105	15	8.5	50	78	14	15	8.5	15

ZXB-02 Head mounting

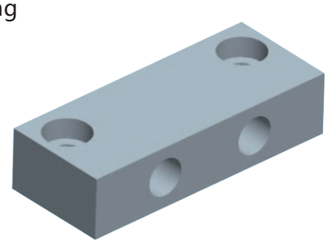

Material: Aluminum (oxidation)
Cylinder mounting head screws are included.
When using head mounting, the port of the surface must be blocked.

Overall Dimension

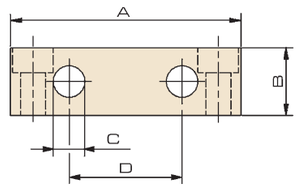

Dimension

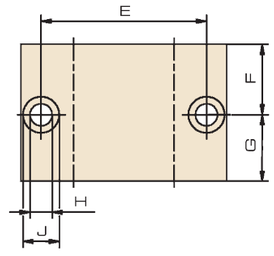

Bore/Symbol	A	B	C	D	E	F	G	H	J
25	45	15	5.5	22	36	12.5	5.5	4.5	8
32	51	15	7	25	41	16.5	17.5	5.5	9
40	64	15	9	25	49	17.5	8.5	6.5	11
50	89	15	8.5	40	65	27.5	12.5	8.5	15
63	105	15	8.5	50	78	29	11	8.5	15

ZXB-10 and ZXB-02 Center mounting

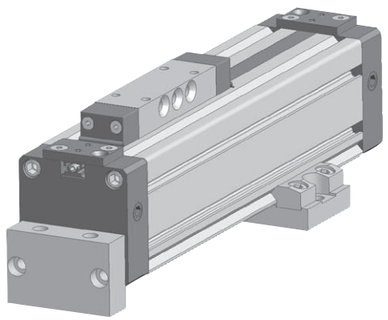

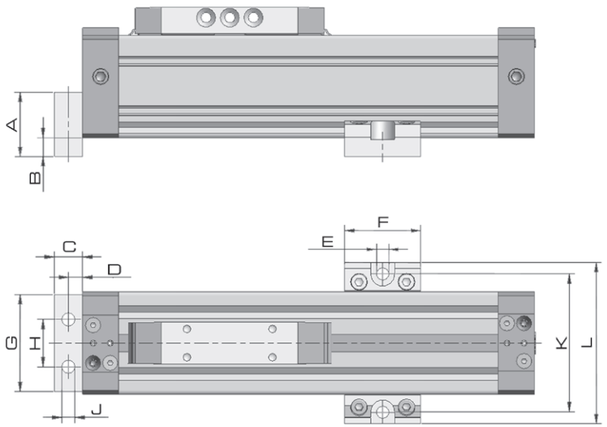

Material: Aluminum (oxidation)
Cylinder mounting head screws are included.
Cylinders don't have to head mounting but use two centers mounting.

According to the symmetrical appearance of Ø25、Ø40、Ø50、Ø63, the three sides outside the cylinder can use center mounting. As for Ø32, ZXB-32-10 center mounting can only be used on the side when the slider operating. If mounted on the other two sides, ZXB-32-11 can use center mounting.

Dimension

Bore/Symbol	A	B	C	D	E	F	G	H	J	K	L
25	18	8	15	7.5	5.5	35	45	22	5.5	60	70
32	34	10	15	7.5	6.6	40	51	25	7	73	85
40	26	10	15	7.5	9	40	64	25	9	90.5	105
50	40	15	15	7.5	11	70	89	40	8.5	120	138
63	40	15	15	7.5	11	70	105	40	8.5	136	154

MHL2 Series
Wide Type Gripper
(Parallel Opening and Closing Type)

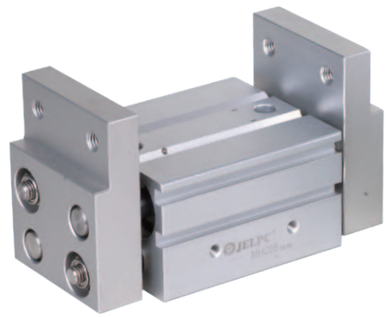

Ordering Code

MHL	2	-	16	D	1	-	MT	□
	Number		Bore	Operation	Finger Opening and Closing Stroke		Sensor Switch	Number of Sensor Switch

Number: Two Fingers

Bore:
- 10: Φ10mm
- 16: Φ16mm
- 20: Φ20mm
- 25: Φ25mm
- 32: Φ32mm
- 40: Φ40mm

Operation: Double Acting

Finger Opening and Closing Stroke

Bore	Blank	1	2
Φ10	20	40	60
Φ16	30	60	80
Φ20	40	80	100
Φ25	50	100	120
Φ32	70	120	160
Φ40	100	160	200

Sensor Switch: D-A93

* Standard wire is 1 meter, please order for other length

Number of Sensor Switch
- Blank : 2
- S : 1
- n : n

Cylinder
Sizing
SI
SI A.
SIB
SQ
DNT
SC / SU
SCT
SC A.
SL
DN
DSN
DN/DSN A.
MA
MAC
MA/MAC A.
MAL
MALC
MAL/MACL A.
SDA
CQ2
TCQ2
ADN
TADN
PPRM
ZX
MHL2
Pneumatic Fingers
MXH
MXQ
CJP
CJ2
CDU
TN
CXS
MGP
MSQ

Cylinder
Sizing
SI
SI A.
SIB
SQ
DNT
SC / SU
SCT
SC A.
SL
DN
DSN
DN/DSN A.
MA
MAC
MA/MAC A.
MAL
MALC
MAL/MACL A.
SDA
CQ2
TCQ2
ADN
TADN
PPRM
ZX
MHL2
Pneumatic Fingers
MXH
MXQ
CJP
CJ2
CDU
TN
CXS
MGP
MSQ

Features

1. The jaw part adopts powder metallurgy technology, it is not easy to break, it has high toughness and high strength.
2. The high rigidity and precision linear guide rail is used in the integral structure design.
3. The bottom of the linear guide rail with a positioning pin to prevent the track and the body offset.
4. Open and close stroke has a standard type and long stroke type.

CKZ Series

CKC Series

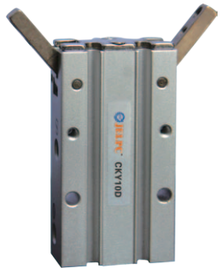

CKY Series

CKZ Series Pneumatic Fingers (Parallel Guide)

Ordering Code

CKZ - 16 - D - 1 - E - MT

Claw Type	Bore	Acting Type	Claw Fixation	Air Intake Mode	Sensor Switch
CKZ : Standard	6	D : Double acting	Blank: Basic	Blank: Basic	Blank: Without magnetic switch
CKZA : Small	10	S : Single acting (normal open)	1: Installation with side screw	E: End side piping (Double/ Single acting)	JEL-30R
CKZL : Long stroke	16	C : Single acting (normal close)	2: Installation with though-hole in open and close direction	M: End to M5 port in axial (Single acting)	or D-A93
	20		3: Flat finger type	H: The end of with Ø4 axial pipe connector (Single acting) 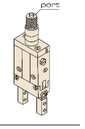	*Small (ZA) type without magnetic switch
	25				
	32				
	40				

*Small (A): Ø6 only ; Long Stroke (L): Ø10~Ø25 only

CKC Series Pneumatic Fingers (Y Type)

Ordering Code

CKC - 20 - D - MT

Type	Bore	Acting Type	Sensor Switch
CKC: Standard	10	D : Double acting	Blank: Without magnet switch (built-in magnetic ring)
CKCA: Short Stroke Ø6	16	S : Single acting (normal open)	JEL-30R
	20		
	25		

CKY Series Pneumatic Fingers (180°)

Ordering Code

CKY - 16 - D - 2 - MT

Type	Bore	Acting Type	Finger Mounting Form	Sensor Switch
	10	D: Double acting	Blank: Installation with screw (Standard)	Blank: Without magnetic switch
	16		2: Installation with though-hole in open and close direction	JEL-30R
	20			
	25			

CKS2 Series

CKS3 Series

CKS4 Series

Features

1. Internal use of the wedge structure, get a larger clamping force.
2. The front end of the piston is provided with the design of collision proof, which can effectively reduce the metal impact sound when the jaw is released.
3. Clamp with high precision repeat, convenience for the installation of the animation device.
4. A variety of series of pneumatic finger for customers to choose, the clamping of various forms of work material.

CKS2 Series Pneumatic Finger (Two Jaw)

Ordering Code

CKS - 2 - 20 - D - MT

Series	Number	Bore	Acting Type	Sensor Switch
	Two Jaw	16 20	D: Double acting	Blank: Without magnetic switch
		25 32		JEL-30R
		40 50		
		63		

CKS3 Series Pneumatic Finger (Three Jaw)

Ordering Code

CKS - L - 3 - 32 - D - MT

Series	Type	Number	Bore	Acting Type	Sensor Switch
	Blank: Standard	Three Jaw	16 20	D: Double acting	Blank: Without magnet switch (built-in magnetic ring)
	L: Long Stroke		25 32		JEL-30R
			40 50		
			63 80		
			100 125		

CKS4 Series Pneumatic Finger (Four Jaw)

Ordering Code

CKS - 4 - 20 - D - MT

Series	Number	Bore	Acting Type	Sensor Switch
	Four Jaw	16 20 25	D : Double acting	Blank: Without magnet switch (built-in magnetic ring)
		32 40 50		JEL-30R
		63		

Cylinder
Sizing
SI
SI A.
SIB
SQ
DNT
SC / SU
SCT
SC A.
SL
DN
DSN
DN/DSN A.
MA
MAC
MA/MAC A.
MAL
MALC
MAL/MACL A.
SDA
CQ2
TCQ2
ADN
TADN
PPRM
ZX
MHL2
Pneumatic Fingers
MXH
MXQ
CJP
CJ2
CDU
TN
CXS
MGP
MSQ

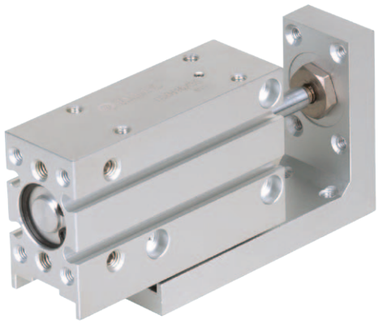

Ordering Code

MXH	10	-	30	-	MT	□
Series	Bore		Stroke		Sensor Switch	Number of Sensor Switch
Built-in magnetic ring	6: Φ6mm		5		D-A93	Blank : 2
	10: Φ10mm		10		* Standard wire is 1 meter, please order for other length	S : 1
	16: Φ16mm		15			
	20: Φ20mm		20			
			25			
			30			
			40			
			50			
			60			

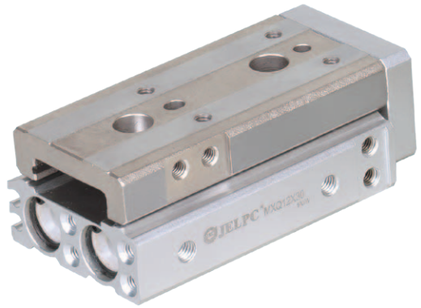

Ordering Code

MXQ	12	L	-	50	AS	FR	-	MT	□
	Bore			Stroke	Stroke Adjuster (Options)	Functional Options		Sensor Switch	Number of Sensor Switch
	6: Φ6mm	Blank: Standard		10	Blank: No	Blank: No		D-A93	Blank : 2
	8: Φ8mm	L: Symmetrical type		20	AS: Rubber Stopper, Front End	F: Spring Buffer		* Standard wire is 1 meter, please order for other length	S : 1
	12: Φ12mm			30	AT: Rubber Stopper, Back End	R: End Lock (*2)			n : n
	16: Φ16mm			40	A: Rubber Stopper, Both End	P: Axial Takeover			
	20: Φ20mm			50	BS: Hydraulic Buffer (*1), Front End	FR: Spring Buffer and End Lock (*2)			
	25: Φ25mm			75	BT: Hydraulic Buffer (*1), Back End	FP: Spring Buffer and Axial Takeover			
				100	B: Hydraulic Buffer (*1), Both End	*2: Not applicable to MXQ6			
				125	CS: Metal Stopper, Front End				
				150	CT: Metal Stopper, Back End				
					C: Metal Stopper, Both End				

*1: Not applicable to MXQ6

Cylinder
Sizing
SI
SI A.
SIB
SQ
DNT
SC / SU
SCT
SC A.
SL
DN
DSN
DN/DSN A.
MA
MAC
MA/MAC A.
MAL
MALC
MAL/MACL A.
SDA
CQ2
TCQ2
ADN
TADN
PPRM
ZX
MHL2
Pneumatic Fingers
MXH
MXQ
CJP
CJ2
CDU
TN
CXS
MGP
MSQ

CJP Series
Pin Cylinder (Single Acting)

Cylinder
Sizing
SI
SI A.
SIB
SQ
DNT
SC / SU
SCT
SC A.
SL
DN
DSN
DN/DSN A.
MA
MAC
MA/MAC A.
MAL
MALC
MAL/MACL A.
SDA
CQ2
TCQ2
ADN
TADN
PPRM
ZX
MHL2
Pneumatic Fingers
MXH
MXQ
CJP
CJ2
CDU
TN
CXS
MGP
MSQ

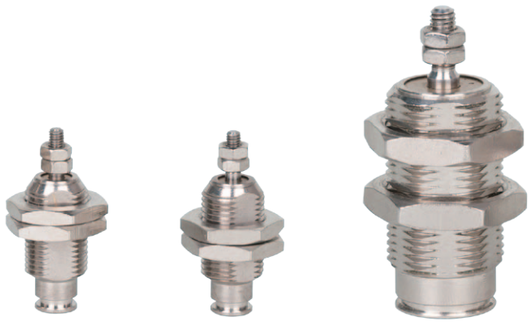

Ordering Code

CJP	B	10	-	15	H4	-	B
	Mountings	Bore		Stroke	Hose Nipple		Rod End Thread
	B: Panel Mount Type	6: Φ6mm		5	Blank: Without hose nipple		Blank: With thread
	S: Embedded Type	10: Φ10mm		10	H4: For Φ4 / Φ2.5 tubing (Nipple model : CJ-5H-4)		B: Without thread
		15: Φ15mm		15	H6: For Φ6 / Φ4 tubing (Fitting model : CJ-5H-6)		

CJ2 Series (Ø6 ~ Ø16)
Stainless Steel Mini Cylinder Double Acting

Cylinder
Sizing
SI
SI A.
SIB
SQ
DNT
SC / SU
SCT
SC A.
SL
DN
DSN
DN/DSN A.
MA
MAC
MA/MAC A.
MAL
MALC
MAL/MACL A.
SDA
CQ2
TCQ2
ADN
TADN
PPRM
ZX
MHL2
Pneumatic Fingers
MXH
MXQ
CJP
CJ2
CDU
TN
CXS
MGP
MSQ

Ordering Code

CDJ2	-	B	-	F	-	6	x	15	-	R	-	MT
Magnet		Installation Type		Foot		Bore		Stroke		Position of port on end cover without rod		Sensor
Blank: Without magnet		B: Bacis type		F: Flange type		6				Blank: Radial (except Ø6)		Blank: Without sensor
D: With magnet		D: Double earing (except Ø6)		L: Foot type		10				R: Axial		* Standard wire is 1 meter, please order for other length
						16				Only double bearing type has radial		

Symbol

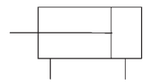

Stroke/Sensor Switch Model

* To choose proper sensor switch, please refer to stroke/ sensor switch chart.
Lead wire length code: Blank - 0.5 m, L - 3 m. Example: C73, C73L.
No additional accessary is required for sliding type of sensor switch installation.

Bore (mm)	Standard Stroke	Sensor Switch Code Tie-up Type Sensor Switch	Sensor Switch Code (Direct installation)	Channel installation type Sensor switch Not Suitable
6	15, 30, 45, 60	D-C73L D-H7A1L D-C76L DH7BL D-C80L	BJ2-006	D-A72L D-A73L D-A76L D-A80L D-F79L D-J79L
10	15, 30, 45, 60, 75, 100, 125, 150		BJ2-010	
16	15, 30, 45, 60, 75, 100, 125, 150, 175, 200		BJ2-016	

Specification

Bore (mm)	6	10	16
Operation Fluid	Air		
Operation	Double Acting		
Min. Operation Pressure	1.05 MPa		
Max. Operation Pressure	0.7 MPa		
Ambient and fluid temp	5 ~ 60 ℃		
Cushion	Rubber Gasket Cushion / Air Cushion		
Rod Operation Speed	50 ~ 750 mm/s		
Tolerance Stroke	+1.0 mm 0 mm		
Lubricant	Non-lub		
Port Size	M5 x 0.8		

JELPC® — China Pneumatic

Overall Dimension

CJ2B Double Acting

Ø6

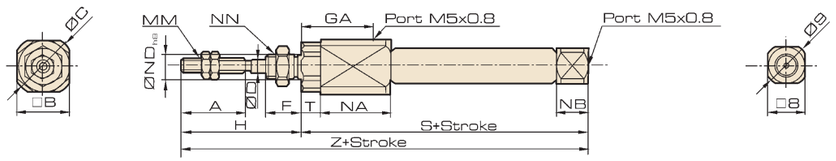

Ø10, 16

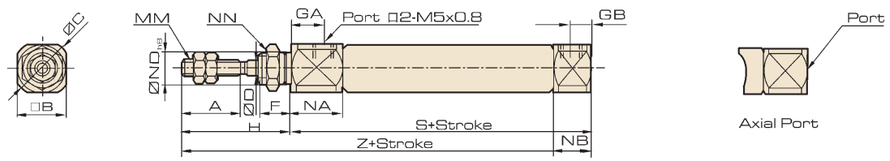

Dimension

Bore (mm)	A	B	C	D	F	GA	GB	H	MM	NA	NB	ND h8	NN	S	T	Z
6	15	12	14	3	8	14.5	-	28	M3x0.5	16	7	6	M6x1.0	49	3	77
10	15	12	14	4	8	8	5	28	M4x0.7	12.5	9.5	8	M8x1.0	46	-	74
16	15	18	20	5	8	8	5	28	M5x0.8	12.5	9.5	10	M10x1.0	47	-	75

Foot/ Flange

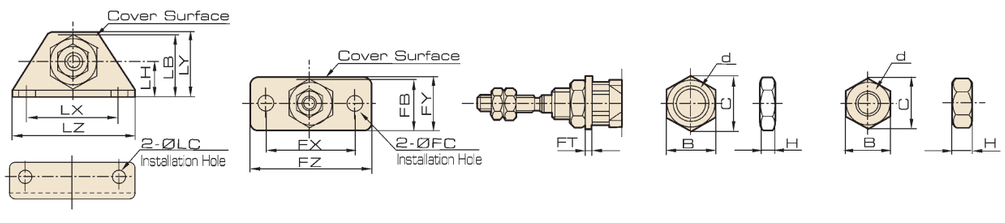

Dimension

Bore (mm)	Foot Seat							Flange							Installation Nut					Rod end Nut				
	Parts No.	LB	ΦLC	LH	LX	LY	LZ	Parts No.	FB	ΦFC	FX	FY	FZ	FT	Parts No.	B	C	d	H	Parts No.	B	C	d	H
6	CJ-L006B	13	4.5	9	24	16.5	32	CJ-F006B	11	4.5	24	14	32	1.6	SNJ-006B	8	9.2	M6x1	4	NTJ006A	5.5	6.4	M3x0.5	2.4
10	CJ-L010B	15	4.5	9	24	16.5	32	CJ-F010B	13	4.5	24	14	32	1.6	SNJ-010B	11	12.7	M8x1	4	NTJ010A	7	8.1	M4x0.7	3.2
16	CJ-L016B	23	5.5	14	33	25	42	CJ-F016B	19	5.5	33	20	42	2.3	SNJ-016B	14	16.2	M10x1	4	NTJ015A	8	9.2	M5x0.8	4

ISO9001:2008 CE

Overall Dimension

CJ2D Double Earring Type

Ø10, 16

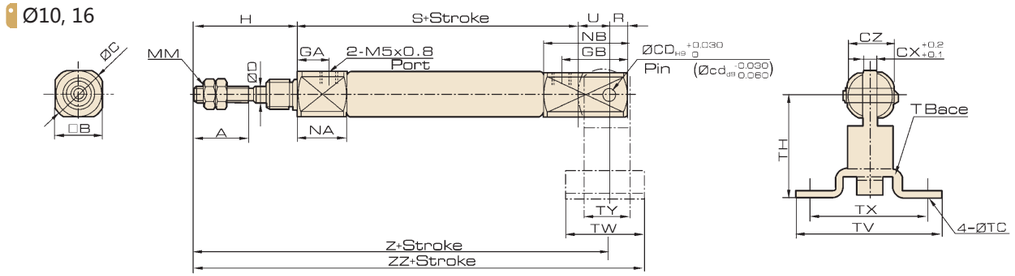

Bore (mm)	A	B	C	CD(cd)	CX	CZ	D	GA	GB	H	MM	NA	NB	R	S	U	Z	ZZ
10	15	12	14	3.3	3.2	12	4	8	18	28	M4x0.7	12.5	22.5	5	46	8	82	93
16	15	18	20	5	6.5	18	5	8	23	28	M5x0.8	12.5	27.5	8	47	10	85	99

T Base

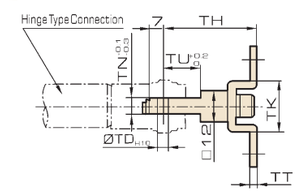

Hinge with Pin

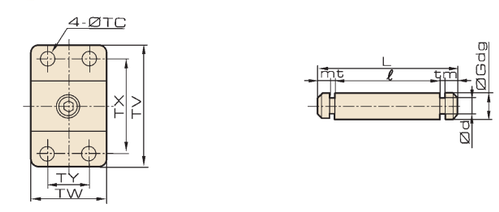

Bore (mm)	T Type piston rod clevis												Pin for piston rod clevis					
	Part Code	TC	TD H10	TH	TK	TN	TT	TU	TV	TW	TX	TY	Part Code	Dd9	Φd	L	e	m	t
10	CJ-T010B	4.5	3.3 +0.048 0	29	18	3.1	2	9	40	22	32	12	CD-J010	3.3 -0.03 -0.06	3	15.2	12.2	1.2	0.3
16	CJ-T016B	5.5	5 +0.048 0	35	20	6.4	2.3	14	48	28	38	16	CD-Z015	5 -0.03 -0.06	4.8	22.7	18.3	1.5	0.7

I Type Piston rod clevis

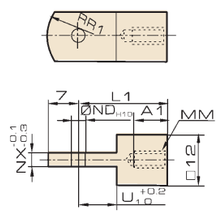

Y Type Piston rod clevis

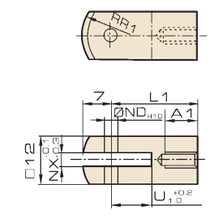

Pin for piston rod clevis

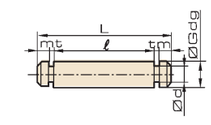

Bore (mm)	I Type piston rod clevis								Y Type piston rod clevis								Pin for piston rod clevis						
	Part Code	A1	ND H10	L1	MM	U1	NX	R1	Part Code	A1	ND H10	L1	MM	U1	NX	R1	Part Code	ΦDdg	L	d	e	m	t
10	I-J010B	8	3.3 +0.048 0	21	M4x0.7	9	3.1	8	Y-J010B	8	3.3 +0.048 0	21	M4x0.7	10	3.2	8	IY-J010	3.3 -0.03 -0.06	16.2	3	12.2	1.7	0.3
16	I-J016B	8	5 +0.048 0	25	M5x0.8	14	6.4	12	Y-J016B	11	5 +0.048 0	21	M5x0.8	10	6.5	12	IY-J015	5 -0.03 -0.06	16.6	4.8	12.2	1.5	0.7

JELPC® | JELPC — China Pneumatic

Ordering Code

C D U	K	-	25	x	30	-	D	-	MT
Magnet	Type		Bore		Standard Stroke		Motion Type		Sensor
Blank: Without magnet D: With magnet	Blank: Basic type K: Non-rotating		6 20 10 25 16 32		5 30 10 40 15 50 20		D: Double acting S: Single acting (Spring-in) T: Single acting (Spring-out)		D-A93 * Standard wire is 1 meter, please order for other length

Symbol

Double Acting Non-rotating Rod

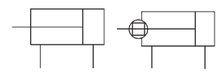

Spring-in Spring-out

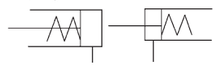

Stroke/Sensoric Switch Model

Bore (mm)	Standard Stroke		Stroke Length (Double Acting)	*Sensor Switch Model (Direct mounting)
	Double Acting	Single Acting		
6	5, 10, 15, 20, 25, 30	5, 10, 15,	40, 50, 60	D-A90L D-A93L D-A96L D-A80L D-F9NL D-F98L
10				
16				
20	5, 10, 15, 20, 25, 30, 40, 50		60, 70, 80, 90, 100	
25				
32				

Specification

Bore (mm)	6	10	16	20	25	32
Operating Fluid	Air					
Operation	D: Double Acting, S: Single Acting (Spring-in), T: Single Acting (Spring-out)					
Max. Operating Pressure	0.7 MPa					
Proof Pressure	1.0 MPa					
Ambient and fluid temp	5 ~ 60 ℃					
Cushion	Both end with Rubber Gasket Cushion					
Lubricant	Non-lub					
Installation Type	Free (Multi- installation)					
Precision non-rotating rod	± 0.8°			± 0.5°		
Port Size	M5 x 0.8					1/8

ISO9001:2008 CE

Overall Dimension

C D U Double/Single Acting

Ø6, Ø10

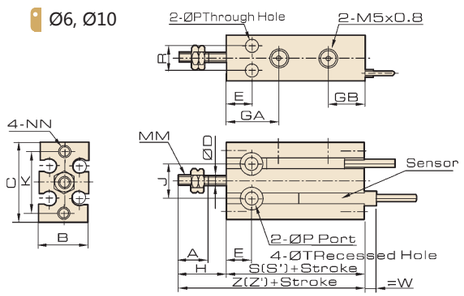

Ø16, Ø25

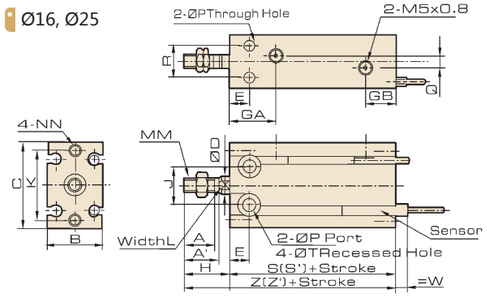

Ø32

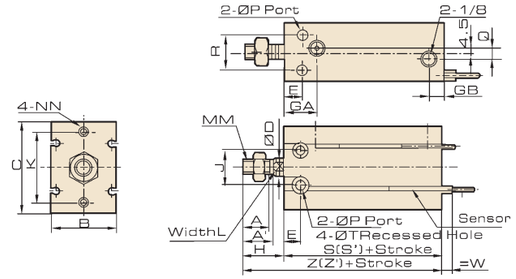

Dimension

Model	A	A'	B	C	ØD	E	GA	GB	J	K	L	MM	NN	ØP	Q	R	ØT
C□U6	7	-	13	22	3	7	14.5	10	10	17	-	M3x0.5	M3x0.5deep5	3.4	-	7	6deep4.8
C□U10	10	-	15	24	4	7	15.5	10	11	18	-	M4x0.7	M3x0.5deep5	3.4	-	9	6deep5
C□U16	11	12.5	20	32	6	7	16.5	11.5	14	25	5	M5x0.8	M4x0.7deep6	4.5	4	12	7.6deep6.5
C□U20	12	14	26	40	8	9	19	12.5	16	30	6	M6x1.0	M5x0.8deep8	5.5	9	16	9.5deep8
C□U25	15.5	18	32	50	10	10	21.5	13	20	38	8	M8x1.25	M5x0.8deep8	5.5	9	20	9.5deep9
C□U32	19.5	22	40	62	12	11	23	13	24	48	10	M10x1.25	M6x1.0deep9	6.6	13.5	24	11deep11.5

Double Acting

Model	H	Basic Type		With Magnet		
		S	Z	W	S'	Z'
C□U6-□D	13	33	46	2.5	33	46
C□U10-□D	16	36	52	1	36	52
C□U16-□D	16	30	46	0	40	56
C□U20-□D	19	36	55	1	46	65
C□U25-□D	23	40	63	-1	50	73
C□U32-□D	27	42	69	-4	52	79

Single Acting (Spring-in)

Model	H	Basic Type						W	With Magnet					
		S			Z				S'			Z'		
		5st	10st	15st	5st	10st	15st		5st	10st	15st	5st	10st	15st
C□U6-□D	13	38	43	48	51	56	61	2.5	38	43	48	51	56	61
C□U10-□D	16	41	46	56	57	62	72	1	41	46	56	57	62	72
C□U16-□D	16	35	40	50	511	56	66	0	45	50	60	61	66	76
C□U20-□D	19	41	46	56	60	65	75	1	51	56	66	70	75	85
C□U25-□D	23	45	50	60	68	73	83	-1	55	60	70	78	83	93
C□U32-□D	27	47	52	62	74	79	89	-4	57	62	72	84	89	99

Single Acting (Spring-out)

Model	H			Basic Type						W	With Magnet					
				S			Z				S'			Z'		
	5st	10st	15st	5st	10st	15st	5st	10st	15st		5st	10st	15st	5st	10st	15st
C□U6-□T	18	23	28	38	43	48	56	66	76	2.5	38	43	48	56	66	76
C□U10-□T	21	26	31	41	46	56	62	72	87	1	41	46	56	62	72	87
C□U16-□T	21	26	31	45	50	60	66	76	91	0	45	50	60	66	76	91
C□U20-□T	24	29	34	41	46	46	65	75	90	1	51	56	66	75	85	100
C□U25-□T	28	33	38	45	50	50	73	73	98	-1	55	60	70	83	93	108
C□U32-□T	32	37	42	47	52	52	79	79	104	-4	57	62	72	89	99	114

Cylinder
Sizing
SI
SI A.
SIB
SQ
DNT
SC / SU
SCT
SC A.
SL
DN
DSN
DN/DSN A.
MA
MAC
MA/MAC A.
MAL
MALC
MAL/MACL A.
SDA
CQ2
TCQ2
ADN
TADN
PPRM
ZX
MHL2
Pneumatic Fingers
MXH
MXQ
CJP
CJ2
CDU
TN
CXS
MGP
MSQ

Overall Dimension

CDUK

Ø6, Ø10

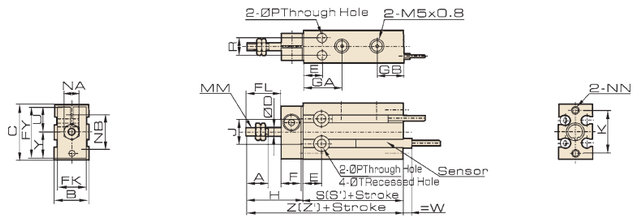

Ø16, Ø25

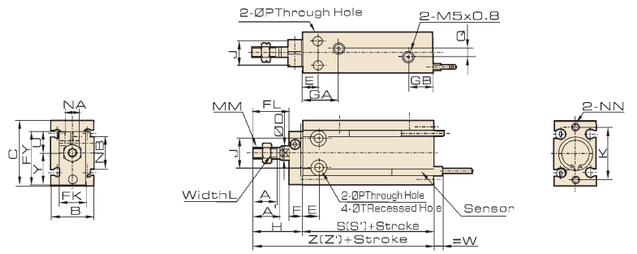

Ø32

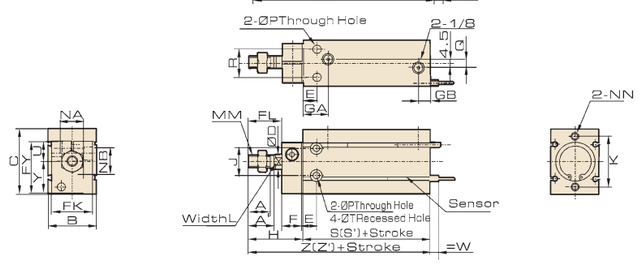

Dimension

Model	A	A'	B	C	ØD	E	F	FL	FK	FY	GA	GB	H	J	K	L	MM	NA	NB	NN	ØP	Q	R	ØT	U	Y
C□UK6	7	-	13	22	3	7	8	9	11	20.5	14.5	10	18	10	17	-	M3x0.5	6	14	M3x0.5 deep5	3.4	-	7	6 deep4.8	10	10.5
C□UK10	10	-	15	24	4	7	8	12	12	22	15.5	10	21	11	18	-	M4x0.7	7	15	M3x0.5 deep5	3.4	-	9	6 deep5	10.5	11.5
C□UK16	11	12.5	20	32	6	7	8	17	13	28	16.5	11.5	26	14	25	5	M5x0.8	6	18	M4x0.7 deep6	4.5	4	12	7.6 deep6.5	12.5	15.5
C□UK20	12	14	26	40	8	9	8	20	16	33	19	12.5	29	16	30	6	M6x1.0	8	20	M5x0.8 deep8	5.5	9	16	9.3 deep8	13.5	19.5
C□UK25	15.5	18	32	50	10	10	10	22	20	43.5	21.5	13	33	20	38	8	M8x1.25	10	28	M5x0.8 deep8	5.5	9	20	9.3 deep9	19	24.5
C□UK32	19.5	22	40	62	12	11	12	29	24	51.5	23	12.5	42	24	48	10	M10x1.25	12	32	M6x1.0 deep9	6.6	13.5	24	11 deep11.5	21	30.5

Double Acting

Model	H	Without Magnet		With Magnet		
		S	Z	W	S'	Z'
C□UK6-□D	18	33	51	2.5	33	51
C□UK10-□D	21	36	57	1	36	57
C□UK16-□D	26	30	56	0	40	66
C□UK20-□D	29	36	65	1	46	75
C□UK25-□D	33	40	73	-1	50	83
C□UK32-□D	42	42	84	-4	52	94

Single Acting (Spring-in)

Model	H	Without Magnet						W	With Magnet					
		S			Z				S'			Z'		
		5st	10st	15st	5st	10st	15st		5st	10st	15st	5st	10st	15st
C□UK6-□D	18	38	43	48	56	61	66	2.5	38	43	48	56	61	66
C□UK10-□D	21	41	46	56	62	67	77	1	41	46	56	62	67	77
C□UK16-□D	26	35	40	50	61	66	76	0	45	50	60	71	76	86
C□UK20-□D	29	41	46	56	70	75	85	1	51	56	66	80	85	95
C□UK25-□D	33	45	50	60	78	83	93	-1	55	60	70	88	93	103
C□UK32-□D	42	47	52	62	89	94	104	-4	57	62	72	99	104	114

Single Acting (Spring-out)

Model	H			ØT	U	Y	Without Magnet						W	With Magnet					
							S			Z				S'			Z'		
	5st	10st	15st				5st	10st	15st	5st	10st	15st		5st	10st	15st	5st	10st	15st
C□UK6-□T	23	28	33	6 deep 4.8	10	10.5	38	43	48	61	71	81	2.5	38	43	48	61	71	81
C□UK10-□T	26	31	36	6 deep 5	10.5	11.5	41	46	56	67	77	92	1	41	46	56	67	77	92
C□UK16-□T	31	36	41	7.6 deep 6.5	12.5	15.5	45	50	60	76	86	101	0	45	50	60	76	86	101
C□UK20-□T	34	39	44	9.3 deep 8	13.5	19.5	41	46	56	75	85	100	1	51	56	66	85	95	110
C□UK25-□T	38	43	48	9.3 deep 9	19	24.5	45	50	60	83	93	108	-1	55	60	70	93	103	118
C□UK32-□T	47	52	57	11 deep 11.5	21	30.5	47	52	62	94	104	119	-4	57	62	72	104	114	129

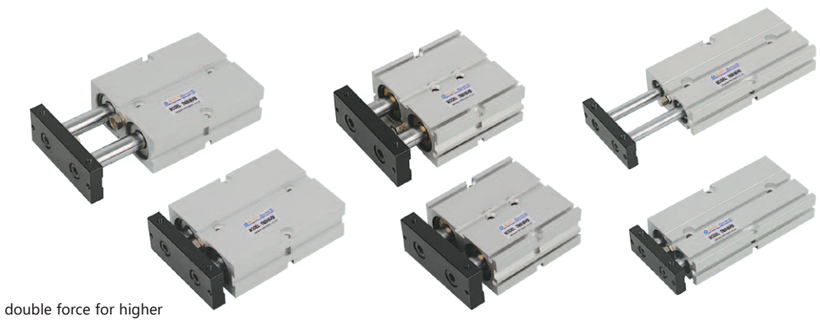

Features

Double rod with double force for higher anti-bending and anti-twisted strength ensured durable life and perfect directional characteristic.

Ordering Code

TN	-	20	x	50	-	MT
Type		Bore		Stroke		Sensor
TN: Double-shaft double acting		10 16 20 25 32				CSI-J * Standard wire is 1 meter, please order for other length

* TN Series attached magnetic ring

Symbol

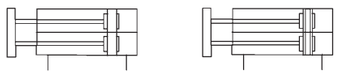

Specification

Bore (mm)	10	16	20	25	32
Working Medium	Air				
Operation	Double Acting				
Operation Pressure Range	0.1~0.9 MPa				
Ensure Pressure Resistance	1.35 MPa				
Operation Temperature Range	0~70 °C				
Operation Speed Range	100~500 mm/s				
Adjustable Stroke	-10~0 mm				
Cushion	Not Available	Cushion Gasket			
Presion Of Non-rotating	0.4°	0.3°			
Port Size	M5 x 0.8				PT 1/8"

The Max. operating pressure is subject to the Max. load of hydralic buffer.

Stroke

Bore (mm)	Standard Stroke	Max. Stroke	Allowable Stroke
10	10 20 30 40 50 60 70	70	100
16	10 20 30 40 50 60 70 80 90 100 125 150	150	200
20	10 20 30 40 50 60 70 80 90 100 125 150	150	200
25	10 20 30 40 50 60 70 80 90 100 125 150	150	200
32	10 20 30 40 50 60 70 80 90 100 125 150	150	200

Internal Structure

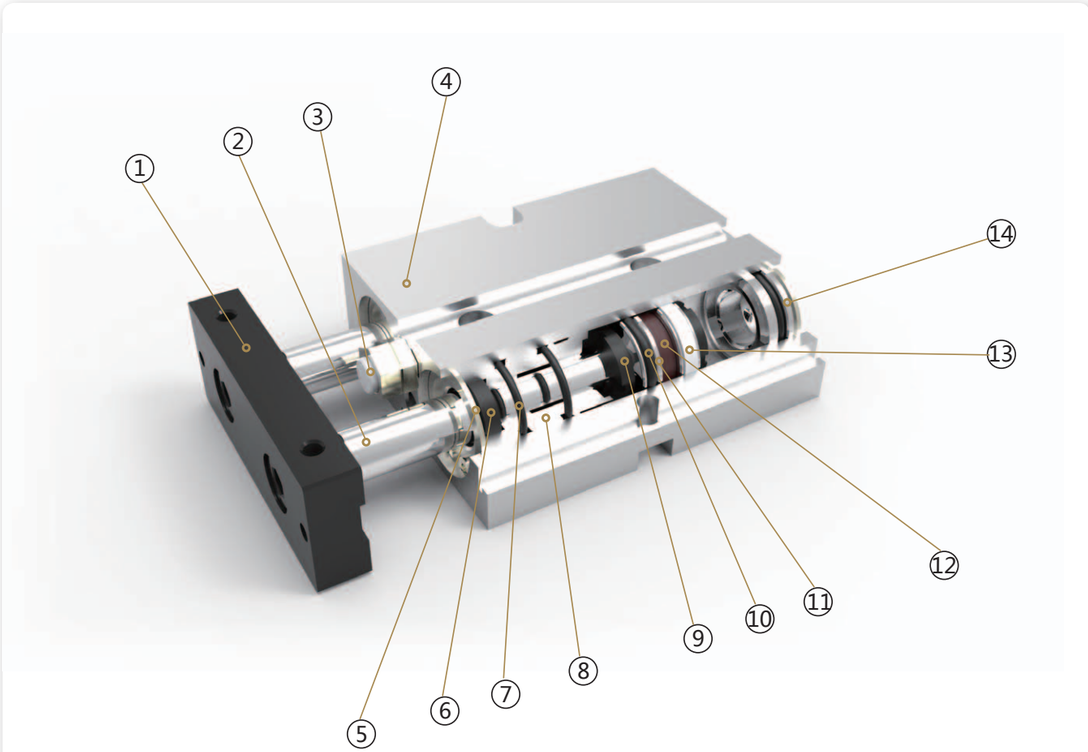

Parts

Number	Name	Number	Name
1	Fixing plate	8	Front cover
2	Piston rod	9	Anti-collision washer
3	Anti-collision head	10	Piston seal
4	Cylinder body	11	Piston
5	Circlips for holes	12	Magnet
6	Shaft seal	13	Anti-friction ring
7	O ring	14	Back cover

Overall Dimension

TN

Ø16~Ø25

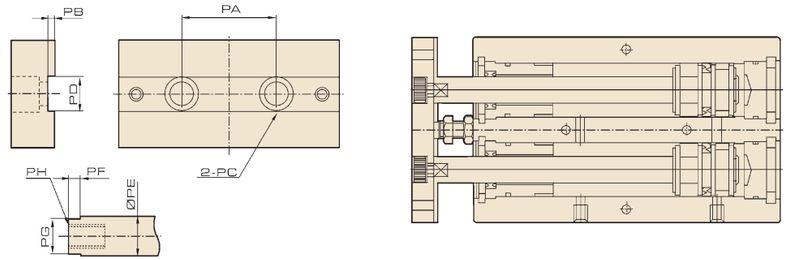

Dimension

Bore / Symbol	PA	PB	PC	PD	PE	PF	PG	PH
10	18	0.5	Φ6.2 deep 3.5 mm, Through Hole: Φ4.5	5.2	6	3	5.2	M3 × 0.5 deep 5 mm
16	24	1	Φ7.8 deep 4.6 mm, Through Hole: Φ4.5	6.2	8	3	6.2	M4 × 0.7 deep 46 mm
20	28	1	Φ11 deep 6.8 mm, Through Hole: Φ4.5	8.2	10	3	8.2	M6 × 1 deep 48 mm
25	34	1	Φ11 deep 6.8 mm, Through Hole: Φ4.5	10.2	12	3	10.2	M6 × 1 deep 48 mm
32	42	2	Φ17 deep 12 mm, Through Hole: Φ4.5	14	16	3	14	M10 × 1.5 deep 14 mm

Overall Dimension

Allowable size load

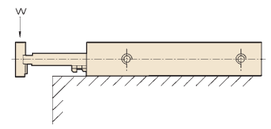

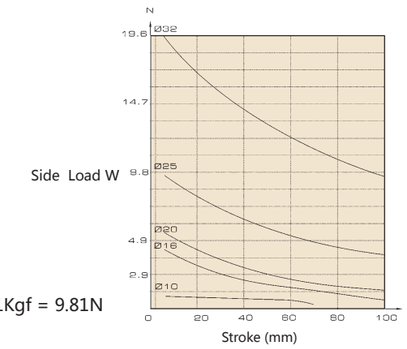

*1Kgf = 9.81N

Dimension

O-ring List

Inner Diameter Quantity	Front cover seal	Piston O-ring	Rear cover O-ring	Piston rod O-ring
	1	2	2	1
10	PDU-6	APA-10	10×1.5	P12
16	PDU-8	APA-16	16×1.5	P16
20	PDU-10	APA-20	20×1.5	P20
25	PDU-12	APA-25	25×1.5	P20
32	PDU-16	APA-32	32×1.5	P25

Cylinder
Sizing
SI
SI A.
SIB
SQ
DNT
SC / SU
SCT
SC A.
SL
DN
DSN
DN/DSN A.
MA
MAC
MA/MAC A.
MAL
MALC
MAL/MACL A.
SDA
CQ2
TCQ2
ADN
TADN
PPRM
ZX
MHL2
Pneumatic Fingers
MXH
MXQ
CJP
CJ2
CDU
TN
CXS
MGP
MSQ

Overall Dimension

TN

Ø10

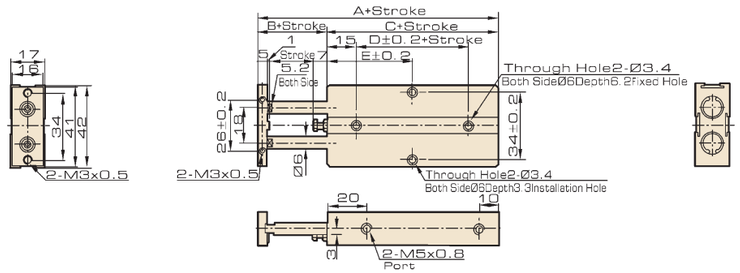

Ø16~Ø25

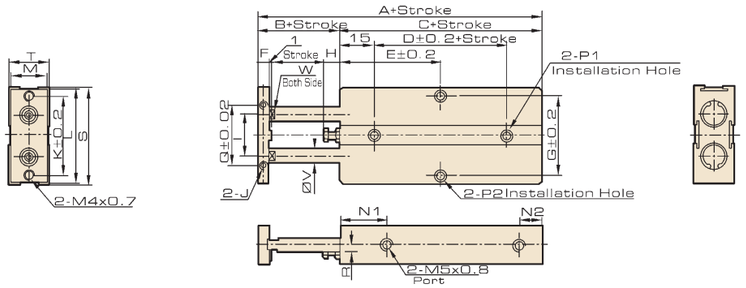

Ø32

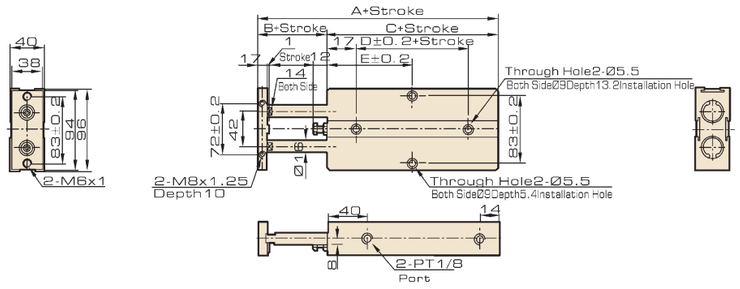

Dimension

Bore Symbol	A	B	C	D	E												F	G	H	I
					10	20	30	40	50	60	70	80	90	100	125	150				
16	68	15	53	20	30	35	40	45	50	55	60	65	70	75	87.5	100	8	47	6	24
20	78	20	58	20	35	35	40	45	50	55	60	65	70	75	87.5	100	10	55	9	28
25	81	19	62	30	40	40	45	50	55	60	65	70	75	80	92.5	105	10	66	8	34

Bore Symbol	J	K	L	M	N1	N2	P1	P2	Q	R	S	T	V	W
16	M4×0.7 deep 5	47	53	20	22	10	Double side: Φ7.5 Deep: 7.2mm, Through Hole: Φ4.5	Double side: Φ8 Deep: 4.4mm, Through Hole: Φ4.5	34	3	54	21	8	6.2
20	M4×0.7 deep 5	55	61	24	25	12	Double side: Φ7.5 Deep: 7.2mm, Through Hole: Φ4.5	Double side: Φ8 Deep: 4.4mm, Through Hole: Φ4.5	44	3.5	62	25	10	8.1
25	M4×0.8 deep 6	66	72	27	30	12	Double side: Φ7.5 Deep: 7.2mm, Through Hole: Φ4.5	Double side: Φ8 Deep: 4.4mm, Through Hole: Φ4.5	56	7	73	30	12	10.2

Bore Symbol	A	B	C	D	E												
					10	20	30	40	50	60	70						
10	63	12	51	10	30	30	35	40	45	50	55						
32	108	30	78	35	10	20	30	40	50	60	70	80	90	100	125	150	
					45	50	55	60	65	70	75	80	85	90	102.5	115	

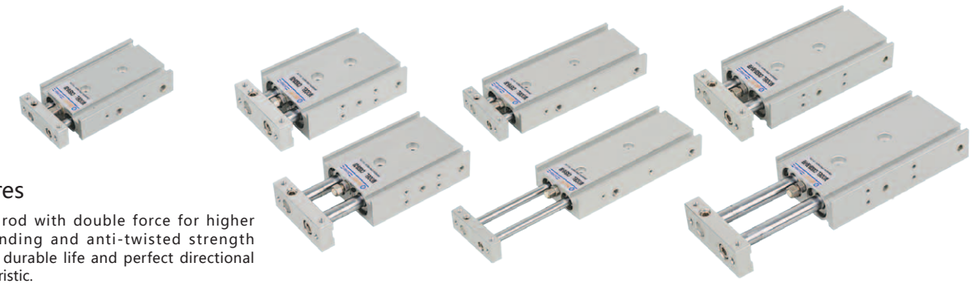

Features

Double rod with double force for higher anti-bending and anti-twisted strength ensured durable life and perfect directional characteristic.

Ordering Code

CXS M	-	20	x	100	-	MT
Type Bearing		Bore		Stroke		Sensor
M: Slidable bearing		6 20		As S/M chart		D-Z73
L: Ball bearing		10 25				* Standard wire is 1 meter, please order for other length
		15 32				

* CXS Series attached magnetic ring

Symbol

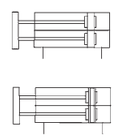

Stroke/Sensor Switch Model

Bore (mm)	Standard Stroke	*Sensor Switch Model (Install by Orbit type)
6	10, 20, 30, 40, 50	D-Z73L D-Z76L D-Z80L D-Y59AL D-Y59BL
10	10, 15, 20, 25, 30, 40, 45,50, 60, 70,75,	
15	10, 15, 20, 25, 30, 40, 45,50, 60, 70, 75, 80, 90, 100	
20		
25		
32		

Specification

Bore (mm)		6	10	15	20	25	32
Operation Fulid		Air					
Operation		Double Acting					
Proof Pressure		1.05 MPa					
Max. Operation Pressure		0.7 MPa					
Ambient and fluid temp		5 ~ 60 ℃					
Cushion		Both end Rubber Gasket Cushion					
Piston Speed		30 ~ 800 mm/s	30 ~ 800 mm/s	30 ~ 700 mm/s	30 ~ 600 mm/s		
*Lubrication		Non-lub					
Adjustable stroke range		Returned Stroke 0 ~ -5 mm					
Bearing		Slidable bearing/Ball Bearing					
Non-rotating rod precision	Slidable bearing	± 0.1°					
	Ball Bearing	± 0.1°					
Port Size Rc		M5 x 0.8					1/8
Structure		Double Cylinder (Double force)					

Cylinder body can be fixed, position port can be choosed

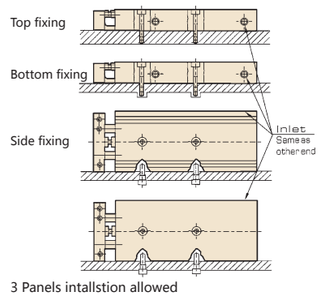

3 Panels intallstion allowed

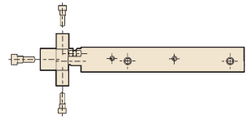

Suitable Bore Size Ø6

Model	Stroke				
	10	20	30	40	50
CXSM6	0.8	0.66	0.54	0.46	0.40
CXLM6	1.08	0.88	0.69	0.59	0.49

Suitable bore size Ø6

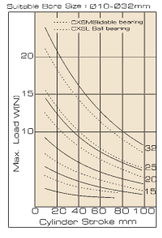

Max. Allowable Load

Below A indicates type of mouting, and below B indicates type of installation.

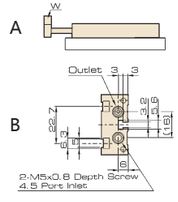

Overall Dimension

CXS

Ø6

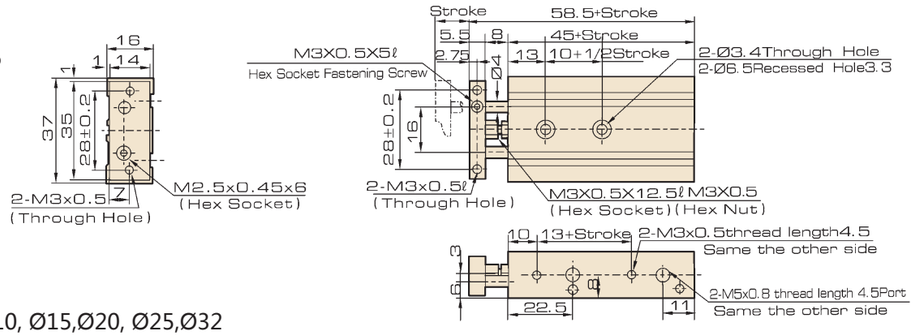

Ø10, Ø15,Ø20, Ø25,Ø32

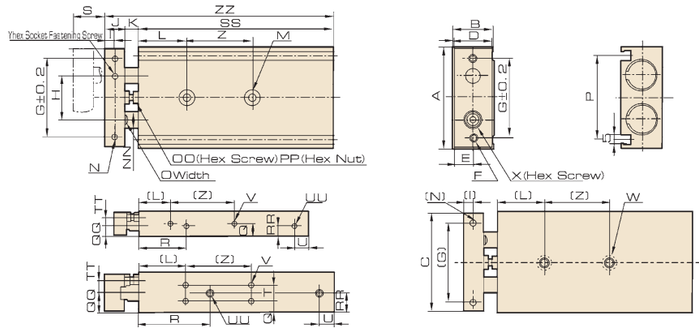

Dimension

Model	A	B	C	D	E	F	G	H	I	J	K	L	M	N	NN	O	OO	P	PP	Q	QQ	R	RR	S	SS	T	TT	U	UU	V	W	X	Y	Z	ZZ
CXS○10-10	46	17	44	15	7.5	2-M4 x0.7 (Port)	35	20	4	8	9	20	2-Ø3.4 Port 2-Ø6.5 Thread length 3.3	2-M3 x0.5 Thread length 5	Ø6	5	M4 x 0.7 x 14.5L	33.6	M4 x 0.7	8.5	7	30	7	10	65	-	5	8	4-M5 x0.8 Thread length 4.5 (Port) (Same the other side)	4-M3 x0.5 Thread length 4.5 (Same the other side)	2-M4 x0.7 Thread length 7	M3 x 0.5 x 10L	M3 x 0.5 x 5L	30	82
CXS○10-20																								20	75										92
CXS○10-30																								30	85								40		102
CXS○10-40																								40	95										112
CXS○10-50																								50	105										122
CXS○15-10	58	20	56	18	9	2-M5 x0.8 (Port)	45	25	5	10	9	30	2-Ø4.3 Port 2-Ø8 Thread length 4.4	2-M4 x0.7 Thread length 6	Ø8	6	M4 x 0.7 x 14.5L	48	M4 x 0.7	10	10	38.5	10	10	70	-	5	8	4-M5 x0.8 Thread length 4.5 (Port) (Same the other side)	4-M4 x0.7 Thread length 5 (Same the other side)	2-M5 x0.8 Thread length 8	M5 x 0.8 x 10L	M4 x 0.7 x 4L	25	89
CXS○15-20																								20	80										99
CXS○15-30																								30	90								35		109
CXS○15-40																								40	100										119
CXS○15-50																								50	110										129
CXS○20-10	64	25	62	23	11.5	2-M5 x0.8 (Port)	50	28	6	12	12	30	2-Ø5.5 Port 2-Ø9.5 Thread length 5.3	2-M4 x0.7 Thread length 6	Ø10	8	M6 x 1.0 x 18.5L	53	M6 x 1.0	12.5	12.5	45	7.76	10	80	9.5	6.5	8	4-M5 x0.8 Thread length 4.5 (Port) (Same the other side)	8-M4 x0.7 Thread length 6 (Same the other side)	2-M6 x1.0 Thread length 10	M6 x 1.0 x 12L	M5 x 0.8 x 5L	30	104
CXS○20-20																								20	90										114
CXS○20-30																								30	100								40		124
CXS○20-40																								40	110										134
CXS○20-50																								50	120										144
CXS○20-75																								75	145								60		169
CXS○20-100																								100	170										194
CXS○25-10	80	30	78	28	14	2-M6 x1.0 (Port)	60	35	6	12	12	30	2-Ø6.9 Port 2-Ø11 Thread length 6.3	2-M5 x0.8 Thread length 7.5	Ø12	10	M6 x 1.0 x 18.5L	64	M6 x 1.0	15	15	46	15	10	82	13	9	9	4-1/8 Thread length 6.5 (Port) (Same the other side)	8-M5 x0.8 Thread length 7.5 (Same the other side)	2-M8 x1.25 Thread length 12	M6 x 1.0 x 14L	M6 x 1.0 x 5L	30	106
CXS○25-20																								20	92										116
CXS○25-30																								30	102								40		126
CXS○25-40																								40	112										136
CXS○25-50																								50	122										146
CXS○25-75																								75	147								60		171
CXS○25-100																								100	172										196
CXS○32-10	98	38	96	36	18	2-M6 x1.0 (Port)	75	44	8	16	14	30	2-Ø6.9 Port 2-Ø11 Thread length 6.3	2-M5 x0.8 Thread length 8	Ø16	13	M8 x 1.25 x 23L	76	M8 x 1.25	19	19	56	19	10	92	20	11.5	10	4-1/8 Thread length 6.5 (Port) (Same the other side)	8-M5 x0.8 Thread length 7.5 (Same the other side)	2-M8 x1.25 Thread length 12	M8 x 1.25 x 16L	M8 x 1.25 x 8L	40	122
CXS○32-20																								20	102										132
CXS○32-30																								30	112								50		142
CXS○32-40																								40	122										152
CXS○32-50																								50	132										162
CXS○32-75																								75	157								70		187
CXS○32-100																								100	182										212

Features

1. Light weight and compact.
2. Strong transverse load capacity.
3. Strong torque capacity.
4. High Non-rotating precision.
5. Either ball joint or slide joint are available for directional bearing for directional rod.
6. Easy for installation.
7. Position of both side ports are changeable.

Ordering Code

MGPM	-	32	-	50	-	MT
Type Bearing		Bore		Stroke		Sensor
M: Slidable bearing		12 16				MT2
L: Ball bearing		20 25				* Standard wire is 1 meter, please order for other length
		32 40				
		50 63				
		80 100				

Ordering Code: (examples)

- Cylinder dia needed: 12 , stroke: 50, slid able bearing. Right model number: MGPM 12-50
- Cylinder dia needed: 40, stroke: 100 , Ball bearing with two sensor switches, lead wire length 0.5 m. Right model number: MGPL 40-100-MT2

Specification

Bore (mm)		12	16	20	25	32	40	50	63	80	100
Operation Fluid		Air									
Operation		Double Acting									
Anti-pressure testing pressure		1.5 MPa (15.3 kgf/cm^2)									
Max. Operation Pressure		1.0 MPa (10.2 kgf/cm^2)									
Min. Operation Pressure		0.12 MPa (1.2 kgf/cm^2)									
Ambient and fluid temperature		5 ~+60 ℃									
Piston Speed		50~500 mm/s								50~400 mm/s	
Buffer		Rubber Buffer									
Stroke Tolerance		+1.5 mm 0									
*Lubrication		Non-lub									
Bearing		Slidable bearing/Ball Bearing									
Non-rotating rod precision	Slidable bearing	± 0.08°		± 0.07°		± 0.06°		± 0.05°		± 0.04°	
	Ball Bearing	± 0.10°		± 0.09°		± 0.08°		± 0.06°		± 0.05°	
Port Size Rc (PT)		M5 x 0.8		1/8"				1/4"		3/8"	

* If lubricant is demanded, please choose clear No.1 lubricant, ISOVG32.

Stroke

Bore (mm)	Standard Stroke (mm)	** Sensor Switch Optional Model (For slide installation)
12 , 16	10 , 20 , 30 , 40 , 50 , 75 , 100	D-Z73L D-Z76L D-Z80L D-Y59AL D-Y59BL
20 , 25	20 , 30 , 40 , 50 , 75 , 100 , 125 , 175 , 200	
32 , 40 , 50 , 63 , 80 , 100	20 , 50 , 75 , 100 , 125 , 150 , 175 , 200	

* Strokes (from 5, 10, 20, 30, 35.....) are added with 5, 10, 15, 20 mm thick gasket respectively, ex: MGPM50-10 is with 15 mm thickness gasket (MGPM50-25).

** Please refer to sensor switch series pages in this catalog for spec. and characteristic. Code for lead wire length as follow: Blank - 0.5 m, L-3 m. Example: D-Y59AL, D-Y59AL.

Load and Torque

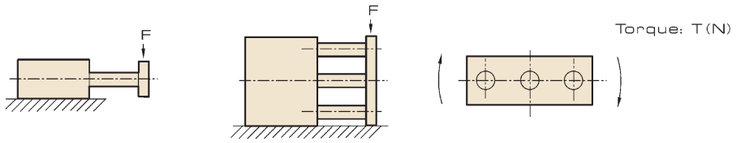

Bore (mm)	Sreies	Max. Transverse Load F (N) Stroke (mm)											
		10	20	25	30	40	50	75	100	125	150	175	200
12	MGPM	24	19	-	17	14	13	26	22	-	-	-	-
	MGPL	37	27	-	22	35	30	23	18	-	-	-	-
16	MGPM	38	31	-	27	23	21	37	32	-	-	-	-
	MGPL	54	40		32	54	47	35	28	-	-	-	-
20	MGPM	-	49	-	43	38	35	87	75	66	59	54	49
	MGPL	-	58	-	48	101	90	70	58	62	54	48	43
25	MGPM	-	69	-	60	54	49	116	100	88	79	71	65
	MGPL	-	82	-	68	132	118	93	77	80	70	62	55
32	MGPM	-	-	203	-	-	164	182	159	142	127	116	106
	MGPL	-	-	113	-	-	78	130	107	130	114	101	90
40	MGPM	-	-	203	-	-	164	182	159	142	127	116	106
	MGPL	-	-	113	-	-	78	129	106	130	114	101	90
50	MGPM	-	-	296	-	-	245	273	241	216	195	179	164
	MGPL	-	-	120	-	-	83	178	148	148	129	114	102
63	MGPM	-	-	296	-	-	245	273	241	216	195	179	164
	MGPL	-	-	117	-	-	81	176	145	145	126	111	99
80	MGPM	-	-	352	-	-	297	368	329	298	272	251	232
	MGPL	-	-	125	-	-	99	281	240	208	184	163	147
100	MGPM	-	-	515	-	-	445	498	450	410	377	349	325
	MGPL	-	-	138	-	-	108	395	340	297	263	235	211

Max. Forque T (N*m) Stroke (mm)											
10	20	25	30	40	50	75	100	125	150	175	200
0.39	0.32	-	0.27	0.24	0.21	0.43	0.36	-	-	-	-
0.78	0.66	-	0.57	0.93	0.85	0.69	0.58	-	-	-	-
0.69	0.58	-	0.49	0.43	0.38	0.69	0.58	-	-	-	-
1.23	1.06	-	0.92	1.53	1.40	1.16	0.99	-	-	-	-
-	1.05	-	0.93	0.83	0.75	1.88	1.63	1.44	1.28	1.16	1.06
-	1.70	-	1.52	3.06	2.87	2.47	2.17	2.38	2.16	1.98	1.82
-	1.76	-	1.55	1.38	1.25	2.96	2.57	2.26	2.02	1.83	1.67
-	2.80	-	2.53	4.67	4.39	3.81	3.36	3.65	3.31	3.02	2.78
-	-	6.35	-	-	5.13	5.69	4.97	4.42	3.98	3.61	3.31
-	-	4.76	-	-	3.86	6.53	5.75	7.10	6.46	5.92	5.47
-	-	7.00	-	-	5.66	6.27	5.48	4.87	4.38	3.98	3.65
-	-	5.24	-	-	4.25	7.19	6.33	7.81	7.11	6.52	6.02
-	-	13.0	-	-	10.8	12.0	10.6	9.50	8.60	7.86	7.24
-	-	7.02	-	-	5.76	12.3	10.9	11.2	10.2	9.40	8.69
-	-	14.7	-	-	12.1	13.5	12.0	10.7	9.69	8.86	8.16
-	-	77.7	-	-	6.35	13.7	12.2	12.5	11.4	10.5	9.65
-	-	22.0	-	-	18.6	22.9	20.5	18.6	17.0	15.6	14.5
-	-	10.3	-	-	9.35	24.8	22.7	20.9	19.4	18.0	16.9
-	-	38.8	-	-	33.5	37.5	33.8	30.9	28.4	26.2	24.4
-	-	13.6	-	-	12.2	41.1	37.9	35.1	32.7	30.5	28.6

Overall Dimension

MGP

Ø12～Ø25

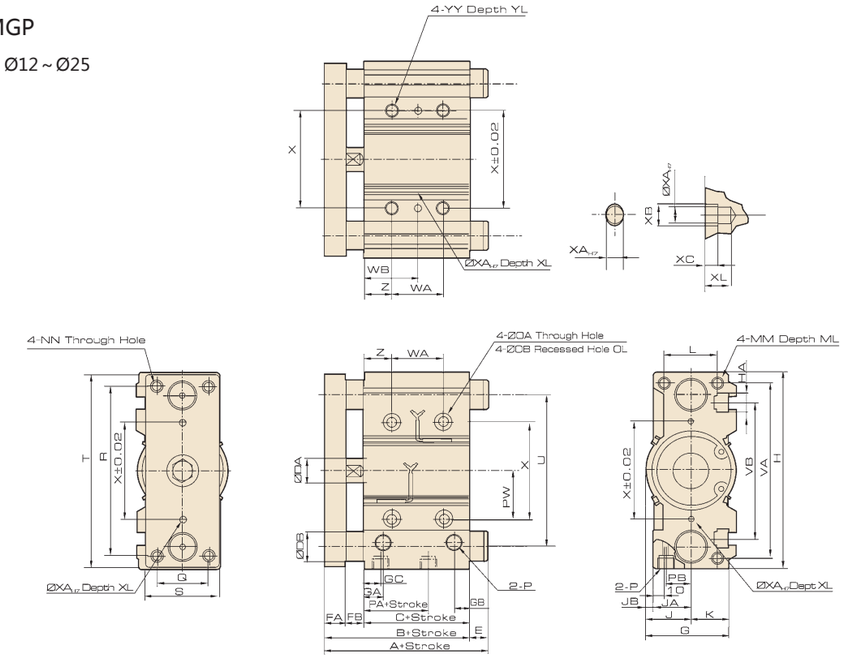

Dimension

MGPM, MGPL (Ø12～Ø25)

Bore (mm)	Standard Stroke	B	C	DA	FA	FB	G	GA	GB	H	HA	J	K	L	MM	ML	NN	OA	OB	OL	P	PA	PB	PW	Q
12	10,20,30,40,	42	29	6	8	5	26	11	7.5	58	M4	13	13	18	M4x0.7	10	M4x0.7	4.3	8	4.5	M5x0.8	13	8	18	14
16	50,75,100	46	33	8	8	5	30	11	8	64	M4	15	15	22	M5x0.8	12	M5x0.8	4.3	8	4.5	M5x0.8	15	10	19	16
20	20,30,40,50, 75,100,125, 150,175,200	53	37	10	10	6	36	10.5	8.5	83	M5	18	18	24	M5x0.8	13	M5x0.8	5.6	9.5	5.5	Rc1/8	12.5	10.5	25	18
25		53.5	37.5	12	10	6	42	11.5	9	93	M5	21	21	30	M6x1.0	15	M6x1.0	5.6	9.5	5.5	Rc1/8	12.5	13.5	28.5	26

Bore (mm)	Standard Stroke	R	S	T	U	VA	VB	WA Below 30st	WA 40st to 100st	WA 125st or above	WB Below 30st	WB 40st to 100st	WB 125st or below	X	XA	XB	XC	XL	YY	YL	Z
12	10,20,30,40,	48	22	56	41	50	37	20	40	-	15	25	-	23	3	3.5	3	6	M5x0.8	10	5
16	50,75,100	54	25	62	46	56	38	24	44	-	17	27	-	24	3	3.5	3	6	M5x0.8	10	5
20	20,30,40,50,75,	70	30	81	54	72	44	24	44	120	29	39	77	28	3	3.5	3	6	M6x1.0	12	17
25	100,125,150,175,200	78	38	91	64	82	50	24	44	120	29	39	77	34	4	4.5	3	6	M6x1.0	12	17

MGPM (Slidable Bearing)

Bore (mm)	A Below 50st	A Above 50st	DB	E Below 50st	E Above 50st
12	42	60.5	8	0	18.5
16	46	64.5	10	0	18.5
20	53	84.5	12	0	31.5
25	53.5	85	16	0	31.5

MGPL (Ball Bearing)

Bore (mm)	A Below 30st	A 30st to 100st	A 100st or Above	DB	E Below 30s	E 30st to 100st	E 100st or Above
12	43	55	85	6	1	13	43
16	49	65	95	8	3	19	49
20	63	80	104	10	10	27	51
25	69.5	80.5	104.5	13	16	32	51

Cylinder
Sizing
SI
SI A.
SIB
SQ
DNT
SC / SU
SCT
SC A.
SL
DN
DSN
DN/DSN A.
MA
MAC
MA/MAC A.
MAL
MALC
MAL/MACL A.
SDA
CQ2
TCQ2
ADN
TADN
PPRM
ZX
MHL2
Pneumatic Fingers
MXH
MXQ
CJP
CJ2
CDU
TN
CXS
MGP
MSQ

Overall Dimension

MGP

Ø32～Ø63

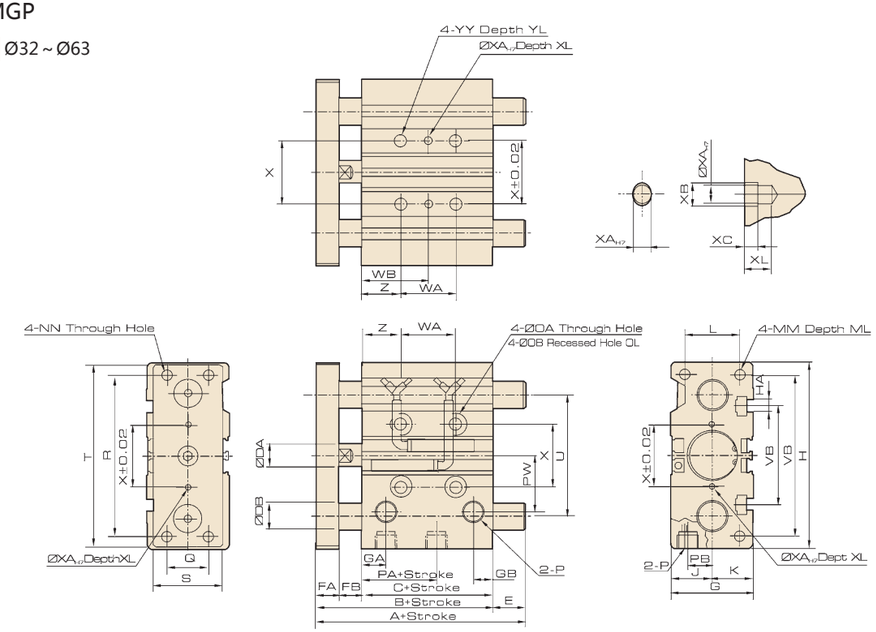

Dimension

MGPM, MGPL (Ø32～Ø63)

Bore (mm)	Standard Stroke	B	C	DA	FA	FB	G	GA	GB	GC	H	HA	J	K	L	MM	ML	NN	OA	OB	OL	P	PA	PB	PW	Q
32	25,50,75, 100,125, 150,175, 200	59.5	37.5	16	12	10	48	12.5	112	9	112	M6	24	24	34	M8x1.25	20	M8x1.25	6.6	11	7.5	Rc1/8	7	15	34	30
40		66	44	16	12	10	54	14	120	10	120	M6	27	27	40	M8x1.25	20	M8x1.25	6.6	11	7.5	Rc1/8	13	18	38	30
50		72	44	20	16	12	64	12	148	11	148	M8	32	32	46	M10x1.5	22	M10x1.5	8.6	14	9	Rc1/4	9	21.5	47	40
63		77	49	20	16	12	78	16.5	162	13.5	162	M10	39	39	58	M10x1.5	22	M10x1.5	8.6	14	9	Rc1/4	14	28	55	50

Bore (mm)	Standard Stroke	R	S	T	U	VA	VB	WA			WB			X	XA	XB	XC	XL	YY	YL	Z
								25st	50,75,100st	Above 100st	25st	50,75,100st	Above 100st								
32	25,50,75, 100,125, 150,175, 200	96	44	110	78	98	63	24	48	124	33	45	83	42	4	4.5	3	6	M8x1.25	16	21
40		104	44	118	86	106	72	24	48	124	34	46	84	50	4	4.5	3	6	M8x1.25	16	22
50		130	60	146	110	130	92	24	48	124	36	48	86	66	5	6	4	8	M10x1.5	20	24
63		130	70	158	124	142	110	28	52	128	38	50	88	80	5	6	4	8	M10x1.5	20	24

MGPM (Slidable Bearing)

Bore (mm)	A		DB	E	
	25,50st	Above 50st		Below 25,50st	Above 50st
32	97	102	20	37.5	42.5
40	97	102	20	31	36
50	106.5	118	25	34.5	46
63	106.5	118	25	29.5	41

MGPL (Ball Bearing)

Bore (mm)	A			DB	E		
	50st	75,100st	Above 100st		50st	75,100st	Above 100st
32	81	98	118	16	21.5	38.5	58.5
40	81	98	118	16	15	32	52
50	93	114	134	20	21	42	62
63	93	114	134	20	16	37	57

MGP New Compact
Tri-Rod Cylinder (Ø20～Ø100)

Cylinder
Sizing
SI
SI A.
SIB
SQ
DNT
SC / SU
SCT
SC A.
SL
DN
DSN
DN/DSN A.
MA
MAC
MA/MAC A.
MAL
MALC
MAL/MACL A.
SDA
CQ2
TCQ2
ADN
TADN
PPRM
ZX
MHL2
Pneumatic Fingers
MXH
MXQ
CJP
CJ2
CDU
TN
CXS
MGP
MSQ

Overall Dimension

MGP

Ø80～Ø100

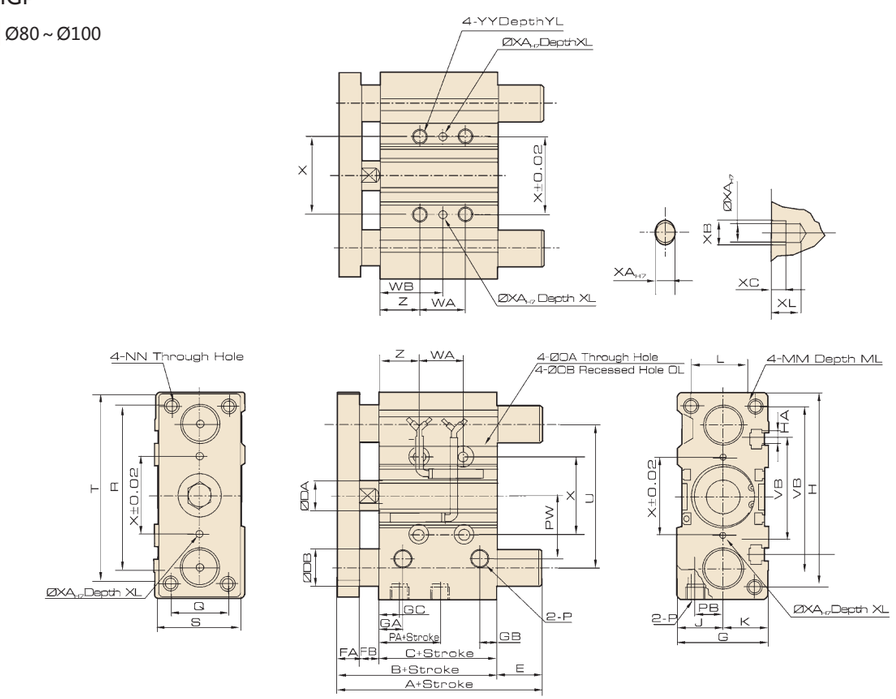

Dimension

MGPM, MGPL Dimension (Ø80～Ø100)

Bore (mm)	Standard Stroke	B	C	DA	FA	FB	G	GA	GB	GC	H	HA	J	JA	JB	K	L	MM	ML	NN	OA	OB	OL	P	PA	PB	PW	Q
80	25,50,75, 100,125,150, 175,200	96.5	56.5	25	22	18	91.5	19	15.5	14.5	202	M12	45.5	38	7.5	46	54	M12x1.75	30	M12x1.75	10.6	17.5	8	Rc3/8	14.5	25.5	74	52
100		116	66	30	25	25	111.5	23	19	18	240	M14	55.5	45	10.5	56	62	M14x2.0	32	M14x2.0	12.5	20	8	Rc3/8	17.5	32.5	89	64

Bore (mm)	Standard Stroke	R	S	T	U	VA	VB	WA			WB			X	XA	XB	XC	XL	YY	YL	Z
								25st	50,75,100st	Above 100st	25st	50,75,100st	Above 100st								
80	25,50,75, 100,125,150, 175,200	174	75	198	156	180	140	28	52	128	42	54	92	100	6	7	5	10	M12x1.75	24	28
100		210	90	236	188	210	166	48	72	148	35	47	85	124	6	7	5	10	M14x2.0	28	11

MGPM (Slidable Bearing)

Bore (mm)	A		DB	E	
	25,50st	Above 50st		Below 25,50st	Above 50st
80	115	142	30	18.5	45.5
100	137	162	36	21	46

MGPL (Ball Bearing)

Bore (mm)	A			DB	E		
	25,50st	75,100st	Above 100st		25,50st	75,100st	Above 100st
80	109.5	130	160	25	13	33.5	63.5
100	121	147	180	30	5	31	64

JELPC® | JELPC — China Pneumatic

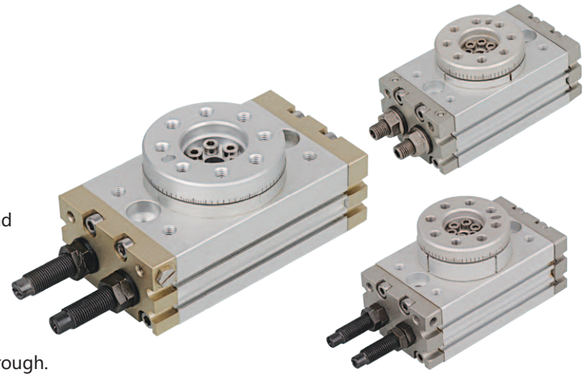

Features

1. High precision balls used in bearing, vertical and horizontal precision are up to ±0.01 mm.
2. Rotational type is easy for installation.
3. Rolling bearing design, load is 3 to 4 times larger than CRQ series.
4. Rotation is smooth and accurate.
5. Hollowed center rods for wire or tube to go through.
6. Standard angle adjusting device for wider angle adjustment (0° ~ 190°).
7. With magnet ring for sensor switch application.

Ordering Code

MSQB	-	10	-	A	-	MT
Model		Bore		Type		Sensor

Bore	Type	Sensor
10 70	A: With angle adjusting screw	Blank: Without sensor
20 100	R: With hydralic Cushion device	* To choose proper sensor switch, please refer to stroke/ sensor switch chart.
30 200		
50		

Stroke / Sensor Switch Model

Model	*Sensor Switch Model (For Slide Installation)
10	D-A90L D-A93L D-A96L D-F9NL D-F9BL
20	
30	
50	
70	
100	
200	

Specification

Bore (mm)		10	20	30	50	70	100	200
Operation Fulid		Air (Non-lub)						
Operation		Double Acting						
Max. Operation Pressure	With angle adjusting screw	1 MPa						
	With hydralic Cushion	0.6 MPa						
Min. Operation Pressure		0.1 MPa						
Ambient and fluid temperature		0~60 ℃						
Cushion		Rubber Buffer (Standard) / Hydralic Cushion device (Optional)						
Function	With angle adjusting screw	0.007J	0025J	0.048 J	0.081J	0.24J	0.32J	0.56J
	With hydralic Cushion	0.039J	0.116J		0.294J	1.1J	1.6J	2.9J
Angle adjusting range		0~190°						
Max. rotating angle		190°						
Steady rotating Time range	With angle adjusting screw	0.2~1.0s/90°				0.2~1.5s/90°	0.2~2.0s/90°	0.2~2.5s/90°
	With hydralic Cushion	0.2~0.7s/90°				0.2~1.0s/90°		
Bore		Φ15	Φ18	Φ21	Φ25	Φ28	Φ32	Φ40
Port Size		M5 x 0.8		Rc1/8				

Max. operation pressure is subject to the Max. load of hydraulic Cushion device.

ISO9001:2008 CE

MSQ Series
Rotational Platform (Gear Type)

Max. Load

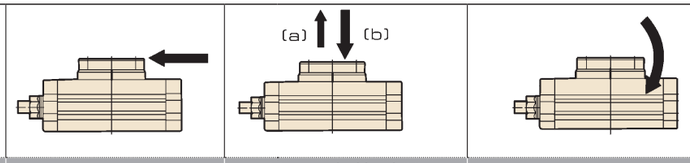

Model	Max.honjontal load (N)	Max. vertical load (N)		Max. bending (N.m)
		(a)	(b)	
MSQ□10□	78	74	78	2.4
MSQ□20□	147	137	137	4.0
MSQ□30□	196	197	363	5.3
MSQ□50□	314	296	451	9.7
MSQ□70□	333	296	476	12.0
MSQ□100□	390	493	708	18.0
MSQ□200□	543	740	1009	25.0

Overall Dimension

MSQA

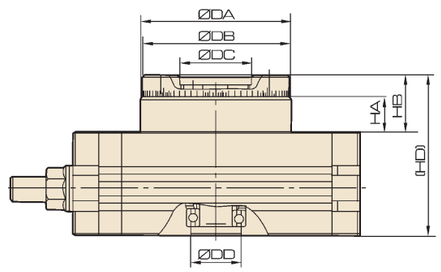

Model	DA	DB	DC	DD	HA	HB	BD
MSQA10□	46h8	45h8	20H8	15H8	10	18.5	52.5
MSQA20□	61h8	60h8	28H8	17H8	15.5	26	63
MSQA30□	67h8	65h8	32H8	22H8	16.5	27	67
MSQA50□	77h8	75h8	35H8	26H8	17.5	30	76

Cylinder
Sizing
SI
SI A.
SIB
SQ
DNT
SC / SU
SCT
SC A.
SL
DN
DSN
DN/DSN A.
MA
MAC
MA/MAC A.
MAL
MALC
MAL/MACL A.
SDA
CQ2
TCQ2
ADN
TADN
PPRM
ZX
MHL2
Pneumatic Fingers
MXH
MXQ
CJP
CJ2
CDU
TN
CXS
MGP
MSQ

JELPC® | JELPC — China Pneumatic

Overall Dimension

MSQB

Ø10, 20, 30, 50

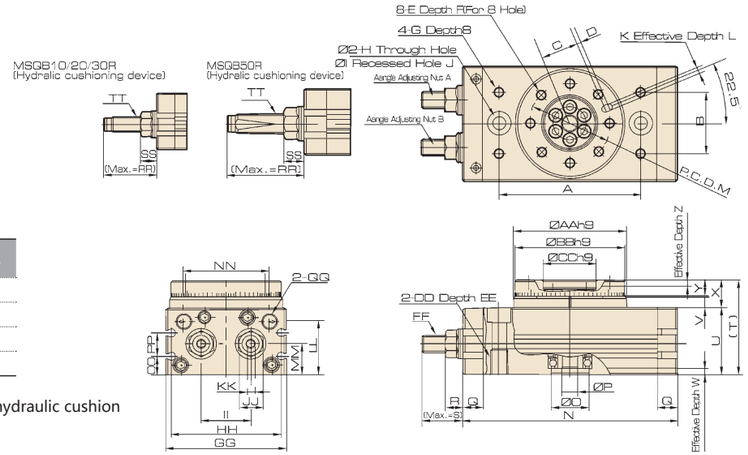

Model	Adjusting angle reached per round*
MSQB10□	Aboves 10.2°
MSQB20□	Aboves 7.2°
MSQB30□	Aboves 6.5°
MSQB50□	Aboves 8.2°

In case of angle adjusting screw or hydraulic cushion twisting one circle.

Dimension

Model	A	B	C	D	E	F	G	H	I	J	K	L	M	N	O	P	Q	R	S	T	U	V	W	X	Y	Z
MSQB10□	60	27	15	2	M5 x 0.8	8	M5x0.8	6.8	11	6.5	3H9	3.5	32	92	15H9	5	9.5	8.6	17.7	47	34	4.5	3	13	8	4
MSQB20□	76	34	20.5	2	M6 x 1	10	M6x1	8.6	14	8.5	4H9	4.5	43	117	17H9	9	12	10.6	25	54	37	6.5	2.5	17	10	6
MSQB30□	84	37	23	2	M6 x 1	10	M6x1	8.6	14	8.5	4H9	4.5	48	127	22H9	9	12	10.6	25	57	40	6.5	3	17	10	4.5
MSQB50□	100	50	26.5	2	M8 x 1.25	12	M8x1.25	10.5	18	10.5	5H9	5.5	55	152	26H9	10	15.5	14	31.4	66	46	7.5	3	20	12	5

Model	AA	BB	CC	DD	EE	FF	GG	HH	II	JJ	KK	LL	MM	NN	OO	PP	QQ	RR	SS	TT	Code of Hydralic Cushion device
MSQB10□	46	45	20	M8 x 1.25	12	M8 x 1	50	45	20	12	4	27.8	15.5	34.5	9	13	M5 x 0.8	31.5	8.6	M8 x 1	RBA0805-X692
MSQB20□	61	60	28	M10 x 1.5	15	M10 x 1	65	60	27.5	14	5	28.8	16	51	10	12	M5 x 0.8	34.7	10.6	M10 x 1	RBA1006-X692
MSQB30□	67	65	32	M10 x 1.5	15	M10 x 1	70	65	29	14	5	32	18.5	50	11.5	14	1/8	34.7	10.6	M10 x 1	RBA1006-X692
MSQB50□	77	75	35	M12 x 1.75	18	M14 x 1.5	80	75	38	19	6	37.5	22	63	14.5	15	1/8	51.7	14	M14 x 1.5	RBA1411-X692

Max. measurement is at Max. rotation angle (190°)

Overall Dimension

MSQB

Ø70

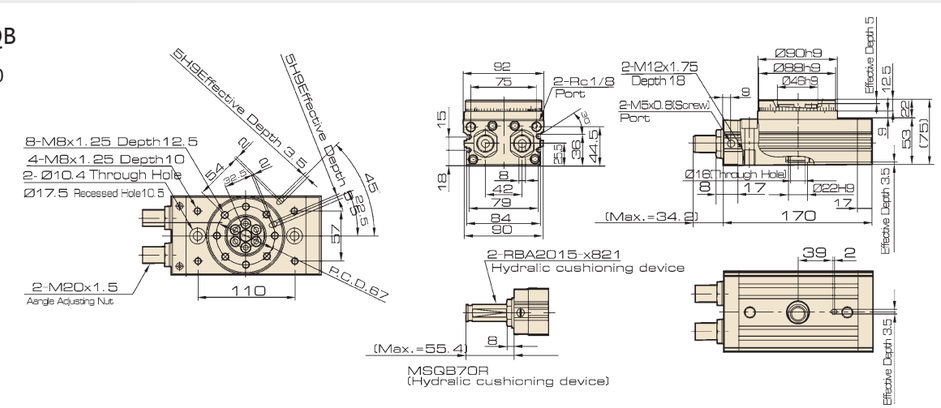

ISO9001:2008 CE

Overall Dimension

MSQB

Ø100

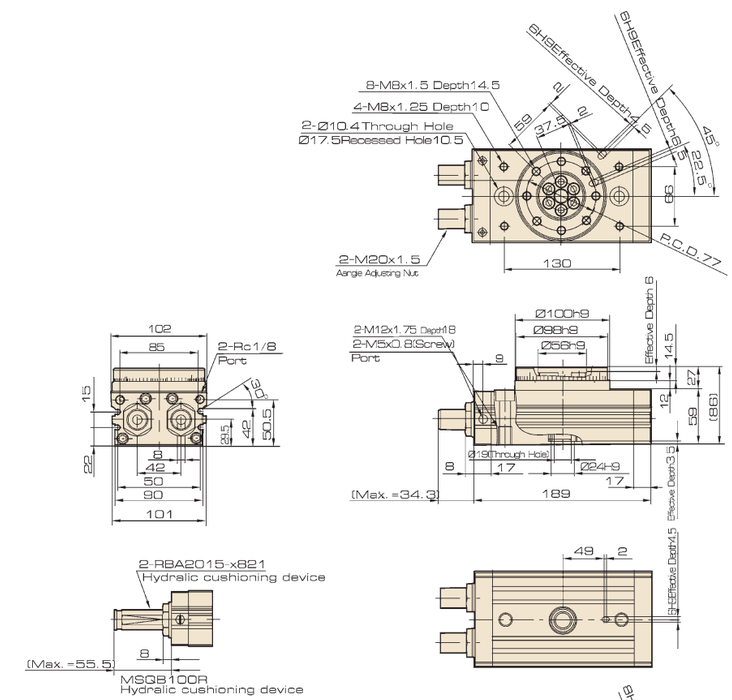

MSQB

Ø200

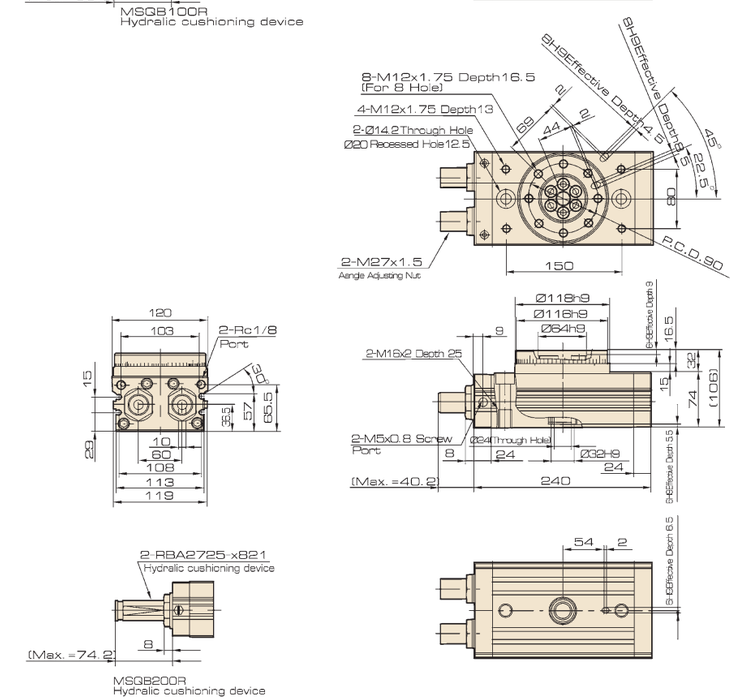

1 Control Element

2 Air SourceTreatment Unit

3 Execution Element

4

JELPC®

PNEUMATIC ACCESSORY

PNEUMATIC ACCESSORY CONTENTS

4-01 HAC, HAD Series Buffer

4-05 HR Series Hydraulic Speed Regulator

4-06 HAC, HAD Series Buffer Accessories

4-07 Pneumatic Accessories

4-13 Metal Fast Fitting

4-13 Silencer

4-13 PU Spiral Fitting / Nylon / Polyurethane / PU Tube

JELPC — China Pneumatic

Ordering Code

HAD	-	25	x	50	-	2	-	N
Series Code		Male Size		Stroke		Impact Speed		Cushion Cap

Series Code
- HAC: Multi-hole Non-adjustable mode
- HAD: Adjustable mode
- HACD: Multi directional cushion mode

Male Size

Stroke
- 6-150 mm

Impact Speed
- 1: High impact speed
- 2: Medium impact speed
- 3: Low impact speed

Cushion Cap
- Blank: With cushion cap
- N: Without cushion cap

CE
ISO9001:2008

HAC, HAD Series
Buffer

HAC Series

Specification

Item	Stroke (mm)	Max. absorbing Energy (Nm)	Absorbing Energy/Hour (Nm)	Max. Availability Weight (Kg)			The highest impact Speed (m/s)		
				1	2	3	1	2	3
HAC-0806	6	2	7,200	0.5	2	6	2	1	0.5
HAC-1005	5	3	10,800	1	3	7	3	1.5	0.8
HAC-1008	8	4	14,400	2	4	9	3	1.5	0.8
HAC-1210	10	5	18,000	5	10	30	2	1.5	0.8
HAC-1412	12	15	36,000	8	50	100	3	1.5	0.8
HAC-1416	16	20	40,000	10	70	150	3	1.5	0.8
HAC-1420	20	25	48,000	12	80	160	3	1.5	0.8
HAC-2020	20	40	48,000	30	200	700	3.5	2	1
HAC-2030	30	50	54,000	30	200	700	3.5	2	1
HAC-2050	50	60	66,000	60	400	1200	3.5	2	1
HAC-2525	25	80	60,000	200	800	1500	4	2.5	1
HAC-2540	40	120	84,000	300	1200	2000	4	2.5	1
HAC-2550	50	98	98,000	15	40	160	4	2.5	1
HAC-2580	80	150	127,500	20	50	200	4	2.5	1
HAC-3660	60	250	125,000	400	1500	2400	4	2.5	1
HACD-2030	30	45	54,000	40	300	900	3.5	2	1
HACD-2035	35	52	62,400	40	200	650	3.5	2	1

* Working Temperature -10 ~ 80 ℃

HAD Series

Specification

Item	Stroke (mm)	Max. absorbing Energy (Nm)	Absorbing Energy/ Hour (Nm)	Max. Availability Weight (Kg)	The highest impact Speed (m/s)
HAD-1410	10	20	24,000	80	3.2
HAD-1415	15	22	26,400	120	3.2
HAD-2016	16	25	32,000	200	3.6
HAD-2025	25	39	39,000	312	3.6
HAD-2525	25	85	51,000	400	3.6
HAD-2530	30	95	57,000	480	3.6
HAD-2540	40	100	84,000	700	3.6
HAD-2550	50	98	98,000	720	4.2
HAD-2580	80	150	127,500	800	4.2
HAD-3625	25	150	90,000	1,400	3.2
HAD-3650	50	300	108,000	1,400	3.2
HAD-4225	25	260	130,000	3,000	3.6
HAD-4250	50	500	155,000	4,000	4.8
HAD-4275	75	750	187,000	6,000	4.8
HAD-64050	50	12,000	1,560,000	12,727	1.6
HAD-64100	100	24,000	1,920,000	18,181	1.6
HAD-64150	150	36,000	2,520,000	23,636	1.6

* Working Temperature -10 ~ 80 ℃

Accessories
HAC/ HAD
HR
HAC/ D A.
Accessories

JELPC® | JELPC — China Pneumatic

Overall Dimension

- HAC-2540
- HAC-3660

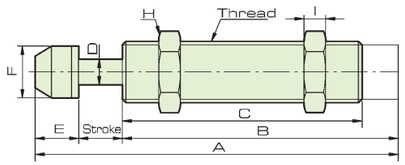

- HAC-2030
- HAC-2035

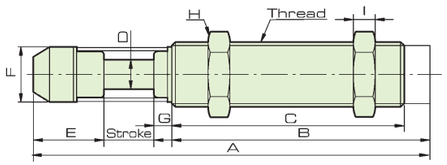

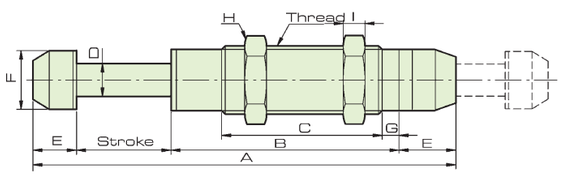

Dimension

Specification/ Symbol	Thread	A	B	C	D	E	F	G	H	I
HAC-0806	M8×1.0	50	38	33	2.8	6	6.6	-	11	3
HAC-1005	M10×1.0	38.7	27.7	22.9	3	6	8.6	-	12.7	3
HAC-1008	M10×1.0	57	43	38	3	6	8.6	-	12.7	3
HAC-1210	M12×1.0	69.5	50	45.5	3	9.5	10.3	-	14	4
HAC-1412	M14×1.5	102.3	76	67	4	14.3	12	-	19	6
HAC-1416	M14×1.5	125.3	95	86	4	14.3	12	-	19	6
HAC-1420	M14×1.5	129.3	95	86	4	14.3	12	-	19	6
HAC-2020	M20×1.5	148	110	101	6	18	18	-	26	8
HAC-2030	M20×1.5	158	110	101	6	18	18	-	26	8
HAC-2050	M20×1.5	235	167	158	6	18	18	-	26	8
HACD-2030	M20×1.5	189	123	44	6	18	18	5	26	8
HACD-2035	M20×1.5	223	123	40	6	15	18	3	26	8
HAC-2525	M25×1.5	155.5	111	101	6	19.5	22	-	32	10
HAC-2540	M25×1.5	213	137	117	8	36	22	10	32	10
HAC-2550	M25×1.5	240	170.5	100	8	19.5	22	-	32	10
HAC-2580	M25×1.5	336.5	237	100	8	19.5	22	-	32	10
HAC-3660	M36×1.5	248	162	134	10	26	35	17	46	15

CE
ISO9001:2008

HAC, HAD Series
Buffer

Accessories
HAC/ HAD
HR
HAC/ D A.
Accessories

Overall Dimension

- HAD-2540
- HAD-3625
- HAD-3650

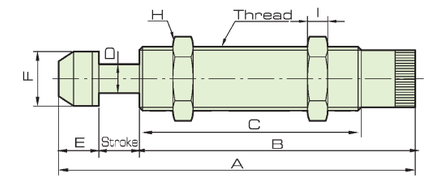

- HAD-64050
- HAD-64100
- HAD-64150

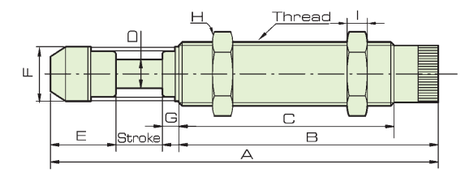

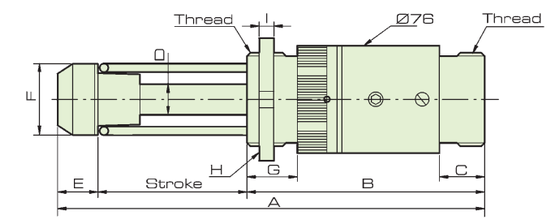

Specification

Specification/ Symbol	Thread	A	B	C	D	E	F	G	H	I
HAD-1410-N	M14×1.5	-	88.5	72.5	4	-	-	-	19	6
HAD-1410	M14×1.5	112.8	88.5	72.5	4	14.3	12	-	19	6
HAD-1415-N	M14×1.5	-	88.5	72.5	4	-	-	-	19	6
HAD-1415	M14×1.5	117.8	88.5	72.5	4	14.3	12	-	19	6
HAD-2016-N	M20×1.5	-	117	101	6	-	-	-	26	8
HAD-2016	M20×1.5	151	117	101	6	18	18	-	26	8
HAD-2025-N	M20×1.5	-	117	101	6	-	-	-	26	8
HAD-2025	M20×1.5	160	117	101	6	18	18	-	26	8
HAD-2525-N	M25×1.5	-	118.5	101	8	-	-	-	32	10
HAD-2525	M25×1.5	163	118.5	101	8	19.5	22	-	32	10
HAD-2530-N	M25×1.5	-	118.5	101	8	-	-	-	32	10
HAD-2530	M25×1.5	168	118.8	101	8	19.5	22	-	32	10
HAD-2540	M25×1.5	220	144.5	117	8	36	-	10	32	10
HAD-2550	M25×1.5	247.5	178	100	8	19.5	22	-	32	10
HAD-2580	M25×1.5	344	244.5	100	8	19.5	-	12.5	32	10
HAD3625	M36×1.5	183.8	133	103	10	25.8	35.5	10	46	10
HAD-3650	M36×1.5	246.8	171	134	10	25.8	35.5	17	46	15
HAD-4225	M42×1.5	186.4	127.5	88	12	33.9	44.5	28.5	50	15
HAD-4250	M42×1.5	240.9	157	117.5	12	33.9	44.5	28.5	50	15
HAD-4275	M42×1.5	301.4	187.5	148	12	33.9	44.5	28.5	50	15
HAD-64050	UNF21/2-12	247.8	146	26	20	51.8	59	23	76.2	9.4
HAD-64100	UNF21/2-12	247.8	196	26	20	51.8	59	23	76.2	9.4
HAD-64150	UNF21/2-12	467.8	256	26	20	51.8	59	23	76.2	9.4

HR Series
Hydraulic Speed Regulator

JELPC® | JELPC — China Pneumatic

HR15 HR30

Ordering Code

HR	-	30	x	F
Series Code		Stroke		Bracket

HR: Adjustable hydraulic speed regulator

Overall Dimension

HR Series

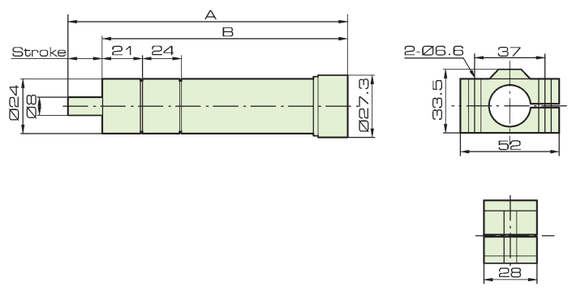

Dimension

Specification/ Symbol	A	B	Max. Stroke (mm)	Working Temperature (℃)	Max. Charge (kgf)
HR15	151	136	15	-10～85	550
HR30	203	172	30	-10～85	550
HR60	280	219	60	-10～85	550
HR80	336	256	80	-10～85	550
HR100	390	290	100	-10～85	550

CE
ISO9001:2008

HAC, HAD Series
Buffer Accessories

Ordering Code

HSC	-	12
Series Code		Specification
HSC: Buffer Orientation Nut		F: M36 ~ M64

Overall Dimension

HSC-08

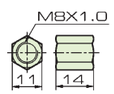

HSC-10

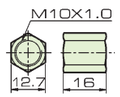

HSC-12

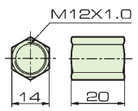

HSC-14

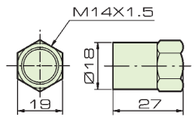

HSC-20

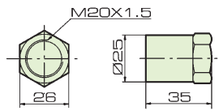

HSC-25

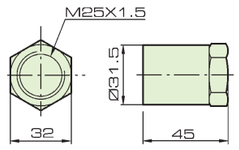

HSC-40

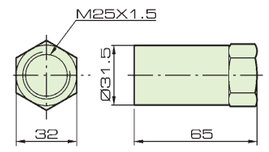

HSC-50

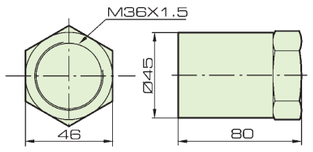

F-36

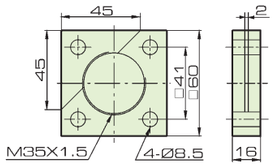

F-42

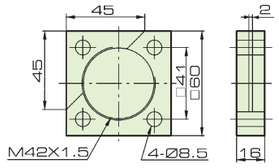

F-64

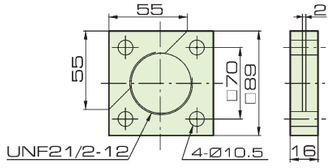

Selection

Specification	HSC-08	HSC-10	HSC-12	HSC-14	HSC-20	HSC-25	HSC-40	HSC-50	F36	F42	F64
Select Item	HAC-0806	HAC-1005 HAC-1007 HAC-1008	HAC-1210	HAC-1412 HAC-1415 HAC-1416 HAC-1420 HAD-1410 HAD-1415	HAC-2015 HAC-2020 HAC-2030 HAC-2050 HACD-2030 HAD-2016 HAD-2025	HAC-2525 HAC-2550 HAC-2580 HAD-2525 HAD-2530 HAD-2550 HAD-2580	HAC-2540 HAD-2540	HAC-3660 HAD-3625 HAD-3650	HAC-3660 HAD-3650	HAD-4225 HAD-4250 HAD-4275	HAD-46015 HAD-64100 HAD-64150

Push-in Fittings Quick Type for Pneumatic Tubing

PC-(G) Male Straight

Model (ΦD-T)				
Tube Dia(mm) - Thread Size (R)/(G)			Tube Dia(inch) - Thread Size (NPT)	
PC04-M5	PC06-04 (G)	PC12-02 (G)	PC5/32-N01	PC5/16-N03
PC04-M6	PC08-01 (G)	PC12-03 (G)	PC5/32-N02	PC5/16-N04
PC04-01 (G)	PC08-02 (G)	PC12-04 (G)	PC3/16-N01	PC3/8-N01
PC04-02 (G)	PC08-03 (G)	PC14-03 (G)	PC3/16-N02	PC3/8-N02
PC04-03 (G)	PC08-04 (G)	PC14-04 (G)	PC1/4-N01	PC3/8-N03
PC06-M5	PC10-01 (G)	PC15-03 (G)	PC1/4-N02	PC3/8-N04
PC06-M6	PC10-02 (G)	PC15-04 (G)	PC1/4-N03	PC1/2-N01
PC06-01 (G)	PC10-03 (G)	PC16-03 (G)	PC1/4-N04	PC1/2-N02
PC06-02 (G)	PC10-04 (G)	PC16-04 (G)	PC5/16-N01	PC1/2-N03
PC06-03 (G)	PC12-01 (G)	PC16-06	PC5/16-N02	PC1/2-N04

PCF-(G) Female Straight

Model (ΦD-T)				
Tube Dia(mm) - Thread Size (R)/(G)			Tube Dia(inch) - Thread Size (NPT)	
PCF04-M5	PCF06-04 (G)	PCF12-02 (G)	PCF5/32-N01	PCF5/16-N03
PCF04-M6	PCF08-01 (G)	PCF12-03 (G)	PCF5/32-N02	PCF5/16-N04
PCF04-01 (G)	PCF08-02 (G)	PCF12-04 (G)	PCF3/16-N01	PCF3/8-N01
PCF04-02 (G)	PCF08-03 (G)		PCF3/16-N02	PCF3/8-N02
PCF04-03 (G)	PCF08-04 (G)		PCF1/4-N01	PCF3/8-N03
PCF06-M5	PCF10-01 (G)		PCF1/4-N02	PCF3/8-N04
PCF06-M6	PCF10-02 (G)		PCF1/4-N03	PCF1/2-N01
PCF06-01 (G)	PCF10-03 (G)		PCF1/4-N04	PCF1/2-N02
PCF06-02 (G)	PCF10-04 (G)		PCF5/16-N01	PCF1/2-N03
PCF06-03 (G)	PCF12-01 (G)		PCF5/16-N02	PCF1/2-N04

PB-(G) Male Branch Tee

Model (ΦD-T)				
Tube Dia(mm) - Thread Size (R)/(G)			Tube Dia(inch) - Thread Size (NPT)	
PB04-M5	PB06-04 (G)	PB12-02 (G)	PB5/32-N01	PB5/16-N03
PB04-M6	PB08-01 (G)	PB12-03 (G)	PB5/32-N02	PB5/16-N04
PB04-01 (G)	PB08-02 (G)	PB12-04 (G)	PB3/16-N01	PB3/8-N01
PB04-02 (G)	PB08-03 (G)	PB14-03 (G)	PB3/16-N02	PB3/8-N02
PB04-03 (G)	PB08-04 (G)	PB14-04 (G)	PB1/4-N01	PB3/8-N03
PB06-M5	PB10-01 (G)	PB15-03 (G)	PB1/4-N02	PB3/8-N04
PB06-M6	PB10-02 (G)	PB15-04 (G)	PB1/4-N03	PB1/2-N01
PB06-01 (G)	PB10-03 (G)	PB16-03 (G)	PB1/4-N04	PB1/2-N02
PB06-02 (G)	PB10-04 (G)	PB16-04 (G)	PB5/16-N01	PB1/2-N03
PB06-03 (G)	PB12-01 (G)		PB5/16-N02	PB1/2-N04

PL-(G) Male Elbow

Model (ΦD-T)				
Tube Dia(mm) - Thread Size (R)/(G)			Tube Dia(inch) - Thread Size (NPT)	
PL04-M5	PL06-04 (G)	PL12-02 (G)	PL5/32-N01	PL5/16-N03
PL04-M6	PL08-01 (G)	PL12-03 (G)	PL5/32-N02	PL5/16-N04
PL04-01 (G)	PL08-02 (G)	PL12-04 (G)	PL3/16-N01	PL3/8-N01
PL04-02 (G)	PL08-03 (G)	PL14-03 (G)	PL3/16-N02	PL3/8-N02
PL04-03	PL08-04 (G)	PL14-04 (G)	PL1/4-N01	PL3/8-N03
PL06-M5	PL10-01 (G)	PL15-03 (G)	PL1/4-N02	PL3/8-N04
PL06-M6	PL10-02 (G)	PL15-04 (G)	PL1/4-N03	PL1/2-N01
PL06-01 (G)	PL10-03 (G)	PL16-03 (G)	PL1/4-N04	PL1/2-N02
PL06-02 (G)	PL10-04 (G)	PL16-04 (G)	PL5/16-N01	PL1/2-N03
PL06-03 (G)	PL12-01 (G)		PL5/16-N02	PL1/2-N04

PD-(G) Male Run Tee

Model (ΦD-T)				
Tube Dia(mm) - Thread Size (R)/(G)			Tube Dia(inch) - Thread Size (NPT)	
PD04-M5	PD06-04 (G)	PD12-02 (G)	PD5/32-N01	PD5/16-N03
PD04-M6	PD08-01 (G)	PD12-03 (G)	PD5/32-N02	PD5/16-N04
PD04-01 (G)	PD08-02 (G)	PD12-04 (G)	PD3/16-N01	PD3/8-N01
PD04-02 (G)	PD08-03 (G)	PD14-03 (G)	PD3/16-N02	PD3/8-N02
PD04-03	PD08-04 (G)	PD14-04 (G)	PD1/4-N01	PD3/8-N03
PD06-M5	PD10-01 (G)	PD15-03 (G)	PD1/4-N02	PD3/8-N04
PD06-M6	PD10-02 (G)	PD15-04 (G)	PD1/4-N03	PD1/2-N01
PD06-01 (G)	PD10-03 (G)	PD16-03 (G)	PD1/4-N04	PD1/2-N02
PD06-02 (G)	PD10-04 (G)	PD16-04 (G)	PD5/16-N01	PD1/2-N03
PD06-03 (G)	PD12-01 (G)		PD5/16-N02	PD1/2-N04

PX-(G) Male Branch Y

Model (ΦD-T)				
Tube Dia(mm) - Thread Size (R)/(G)			Tube Dia(inch) - Thread Size (NPT)	
PX04-M5	PX06-04 (G)	PX12-02 (G)	PX5/32-N01	PX5/16-N04
PX04-M6	PX08-01 (G)	PX12-03 (G)	PX5/32-N02	PX3/8-N01
PX04-01 (G)	PX08-02 (G)	PX12-04 (G)	PX3/16-N01	PX3/8-N02
PX04-02 (G)	PX08-03 (G)		PX3/16-N02	PX3/8-N03
PX04-03 (G)	PX08-04 (G)		PX1/4-N01	PX3/8-N04
PX06-M5	PX10-01 (G)		PX1/4-N02	PX1/2-N01
PX06-M6	PX10-02 (G)		PX1/4-N03	PX1/2-N02
PX06-01 (G)	PX10-03 (G)		PX5/16-N01	PX1/2-N03
PX06-02 (G)	PX10-04 (G)		PX5/16-N02	PX1/2-N04
PX06-03 (G)	PX12-01 (G)		PX5/16-N03	

POC-(G) Inner Hex. Straight

Model (ΦD-T)				
Tube Dia(mm) - Thread Size (R)/(G)				
POC04-M5	POC06-M6	POC08-01 (G)	POC10-02 (G)	POC12-03 (G)
POC04-M6	POC06-01 (G)	POC08-02 (G)	POC10-03 (G)	POC12-04 (G)
POC04-01 (G)	POC06-02 (G)	POC08-03 (G)	POC10-04 (G)	
POC04-02 (G)	POC06-03 (G)	POC08-04 (G)	POC12-01 (G)	
POC06-M5	POC06-04 (G)	POC10-01 (G)	POC12-02 (G)	

PLN-(G) New Elbow

Model (ΦD-T)				
Tube Dia(mm) - Thread Size (R)/(G)				
PLN04-M5	PLN06-M5	PLN06-04 (G)	PLN10-01 (G)	PLN12-02 (G)
PLN04-M6	PLN06-M6	PLN08-01 (G)	PLN10-02 (G)	PLN12-03 (G)
PLN04-01 (G)	PLN06-01 (G)	PLN08-02 (G)	PLN10-03 (G)	PLN12-04 (G)
PLN04-02 (G)	PLN06-02 (G)	PLN08-03 (G)	PLN10-04 (G)	
PLN04-03	PLN06-03 (G)	PLN08-04 (G)	PLN12-01 (G)	

*-G为平面密封的接头。

Push-in Fittings Quick Type for Pneumatic Tubing

Accessories
HAC/ HAD
HR
HAC/ D A.
Accessories

PY Union Y

Model (ΦD)			
Tube Dia(mm)		Tube Dia(inch)	
PY04	PY06-04	PY5/32	PY3/16-5/32
PY06	PY08-04	PY3/16	PY1/4-3/16
PY08	PY08-06	PY1/4	PY3/8-5/16
PY10	PY10-06	PY5/16	PY1/2-3/8
PY12	PY10-08	PY3/8	
	PY12-08	PY1/2	
	PY12-10		

PE Union Tee

Model (ΦD)			
Tube Dia(mm)		Tube Dia(inch)	
PE04	PE06-04-06	PE5/32	PE3/16-5/32-3/16
PE06	PE08-04-08	PE3/16	PE1/4-3/16-1/4
PE08	PE08-06-08	PE1/4	PE5/16-1/4-5/16
PE10	PE10-06-10	PE5/16	PE3/8-5/16-3/8
PE12	PE10-08-10	PE3/8	PE1/2-3/8-1/2
PE14	PE12-08-12	PE1/2	
PE15	PE12-10-12		
PE16			

PV Union Elbow

Model (ΦD)	
Tube Dia(mm)	Tube Dia(inch)
PV04	PV5/32
PV06	PV3/16
PV08	PV1/4
PV10	PV5/16
PV12	PV3/8
PV14	PV1/2
PV15	
PV16	

PMF Female Bulkhead Straight

Model (ΦD-T)	
Tube Dia(mm) -Thread Size (R)	
PMF04-01	PMF08-04
PMF04-02	PMF10-01
PMF06-01	PMF10-02
PMF06-02	PMF10-03
PMF06-03	PMF10-04
PMF06-04	PMF12-01
PMF08-01	PMF12-02
PMF08-02	PMF12-03
PMF08-03	PMF12-04

PKD-(G) Male Triple Run Tee

Model (ΦD-T)	
Tube Dia(mm) - Thread Size (R)/(G)	
PKD04-M5	PKD08-01 (G)
PKD04-01 (G)	PKD08-02 (G)
PKD04-02 (G)	PKD08-03 (G)
PKD04-03	PKD08-04 (G)
PKD06-M5	PKD10-01 (G)
PKD06-01 (G)	PKD10-02 (G)
PKD06-02 (G)	PKD10-03 (G)
PKD06-03 (G)	PKD10-04 (G)
PKD06-04 (G)	

PK Unequal Triple Tee

Model (ΦD)	
Tube Dia(mm)	Tube Dia(inch)
PK04	PK3/16-5/32
PK06	PK1/4-3/16
PK08	PK5/16-1/4
PK10	PK3/8-5/16
PK06-04	
PK08-04	
PK08-06	
PK10-06	
PK10-08	

PXG Unequal Double Branch Y

Model (ΦD-T)
Tube Dia(mm)
PXG06-04
PXG08
PXG08-04
PXG08-06

PLL-(G) Male Long Elbow

Model (ΦD-T)	
Tube Dia(mm) - Thread Size (R)/(G)	
PLL04-M5	PLL08-02 (G)
PLL04-M6	PLL08-03 (G)
PLL04-01 (G)	PLL08-04 (G)
PLL04-02 (G)	PLL10-01 (G)
PLL06-M5	PLL10-02 (G)
PLL06-M6	PLL10-03 (G)
PLL06-01 (G)	PLL10-04 (G)
PLL06-02 (G)	PLL12-01 (G)
PLL06-03 (G)	PLL12-02 (G)
PLL06-04 (G)	PLL12-03 (G)
PLL08-01 (G)	PLL12-04 (G)

PLF Female Elbow

Model (ΦD-T)	
Tube Dia(mm) - Thread Size (R)	
PLF04-M5	PLF08-02
PLF04-M6	PLF08-03
PLF04-01	PLF08-04
PLF04-02	PLF10-01
PLF06-M5	PLF10-02
PLF06-M6	PLF10-03
PLF06-01	PLF10-04
PLF06-02	PLF12-01
PLF06-03	PLF12-02
PLF06-04	PLF12-03
PLF08-01	PLF12-04

PXT-(G) Male Double Branch Y

Model (ΦD-T)
Tube Dia(mm) - Thread Size (R)/(G)
PXT04-01 (G)
PXT04-02 (G)
PXT06-01 (G)
PXT06-02 (G)
PXT06-03 (G)
PXT06-04 (G)
PXT08-01 (G)
PXT08-02 (G)
PXT08-03 (G)
PXT08-04 (G)

PU Union Straight

Model (ΦD)		
Tube Dia(mm)		Tube Dia(inch)
PU04	PU06-04	PU5/32
PU06	PU08-04	PU3/16
PU08	PU08-06	PU1/4
PU10	PU10-06	PU5/16
PU12	PU10-08	PU3/8
PU14	PU12-06	PU1/2
PU15	PU12-08	PU3/16-5/32
PU16	PU12-10	PU1/4-3/16
		PU5/16-1/4
		PU3/8-5/16
		PU1/2-3/8

PM Bulkhead Union

Model (ΦD)
Tube Dia(mm)
PM4
PM6
PM8
PM10
PM12

PZ Union Cross

Model (ΦD)	
Tube Dia(mm)	Tube Dia(inch)
PZ04	PZ5/32
PZ06	PZ1/4
PZ08	PZ5/16
PZ10	PZ3/8
PZ12	

PLM Bulkhead Union Elbow

Model (ΦD)
Tube Dia(mm)
PLM04
PLM06
PLM08
PLM10
PLM12

PP Plug

Model (ΦD)
Tube Dia(mm)
PP04
PP06
PP08
PP10
PP12

PPF Cap

Model (ΦD)
Tube Dia(mm)
PPF04
PPF06
PPF08
PPF10
PPF12

*-G为平面密封的接头。

Push-in Fittings Quick Type for Pneumatic Tubing

PH-(G) Single Banjo

Model (ΦD-T)			
Tube Dia(mm) - Thread Size (R)/(G)		Tube Dia(inch) - Thread Size (NPT)	
PH04-M5	PH08-03 (G)	PH5/32-N01	PH5/16-N04
PH04-01 (G)	PH08-04 (G)	PH3/16-N01	PH3/8-N01
PH04-02 (G)	PH10-01 (G)	PH3/16-N02	PH3/8-N02
PH06-M5	PH10-02 (G)	PH1/4-N01	PH3/8-N03
PH06-01 (G)	PH10-03 (G)	PH1/4-N02	PH3/8-N04
PH06-02 (G)	PH10-04 (G)	PH1/4-N03	PH1/2-N02
PH06-03 (G)	PH12-02 (G)	PH5/16-N01	PH1/2-N03
PH08-01 (G)	PH12-03 (G)	PH5/16-N02	PH1/2-N04
PH08-02 (G)	PH12-04 (G)	PH5/16-N03	

PHF-(G) Link-up Banjo

Model (ΦD-T)			
Tube Dia(mm) - Thread Size (R)/(G)		Tube Dia(inch) - Thread Size (NPT)	
PHF04-M5	PHF08-03 (G)	PHF5/32-N01	PHF3/8-N02
PHF04-01 (G)	PHF08-04 (G)	PHF3/16-N01	PHF3/8-N03
PHF04-02 (G)	PHF10-02 (G)	PHF3/16-N02	PHF3/8-N04
PHF06-M5	PHF10-03 (G)	PHF1/4-N01	PHF1/2-N02
PHF06-01 (G)	PHF10-04 (G)	PHF1/4-N02	PHF1/2-N03
PHF06-02 (G)	PHF12-02 (G)	PHF5/16-N01	PHF1/2-N04
PHF06-03 (G)	PHF12-03 (G)	PHF5/16-N02	
PHF08-01 (G)	PHF12-04 (G)	PHF5/16-N03	
PHF08-02 (G)		PHF5/16-N04	

PHT(2)-(G) Double Link-up Banjo

Model (ΦD-T)	
Tube Dia(mm) - Thread Size (R)/(G)	
PHT04-01 (2) (G)	PHT08-04 (2) (G)
PHT04-02 (2) (G)	PHT10-01 (2) (G)
PHT06-01 (2) (G)	PHT10-02 (2) (G)
PHT06-02 (2) (G)	PHT10-03 (2) (G)
PHT06-03 (2) (G)	PHT10-04 (2) (G)
PHT08-01 (2) (G)	PHT12-02 (2) (G)
PHT08-02 (2) (G)	PHT12-03 (2) (G)
PHT08-03 (2) (G)	PHT12-04 (2) (G)

PHT(3)-(G) Triple Link-up Banjo

Model (ΦD-T)	
Tube Dia(mm) - Thread Size (R)/(G)	
PHT04-01 (3) (G)	PHT08-04 (3) (G)
PHT04-02 (3) (G)	PHT10-01 (3) (G)
PHT06-01 (3) (G)	PHT10-02 (3) (G)
PHT06-02 (3) (G)	PHT10-03 (3) (G)
PHT06-03 (3) (G)	PHT10-04 (3) (G)
PHT08-01 (3) (G)	PHT12-02 (3) (G)
PHT08-02 (3) (G)	PHT12-03 (3) (G)
PHT08-03 (3) (G)	PHT12-04 (3) (G)

PXJ Plug-in Double Y

Model (ΦD)	
Tube Dia(mm)	
PXJ04-04	PXJ10-04
PXJ06-04	PXJ10-06
PXJ08-04	PXJ10-08
PXJ08-06	
PXJ08-08	

PGJ Plug-in Reducer

Model (ΦD)	
Tube Dia(mm)	
PGJ06-04	PGJ12-06
PGJ08-04	PGJ12-08
PGJ08-06	PGJ12-10
PGJ10-06	
PGJ10-08	

PYJ Plug-in Y

Model (ΦD)	
Tube Dia(mm)	
PYJ04	PYJ06-04
PYJ06	PYJ08-06
PYJ08	PYJ10-08
PYJ10	PYJ12-10
PYJ12	

PDJ Plug-in Run Tee

Model (ΦD)	
Tube Dia(mm)	
PDJ04	PDJ06-04
PDJ06	PDJ08-06
PDJ08	PDJ10-08
PDJ10	PDJ12-10
PDJ12	

PBJ Plug-in Tee

Model (ΦD)	
Tube Dia(mm)	
PBJ04	PBJ06-04
PBJ06	PBJ08-06
PBJ08	PBJ10-08
PBJ10	PBJ12-10
PBJ12	

PLJ Plug-in Elbow

Model (ΦD)	
Tube Dia(mm)	
PLJ04	PLJ06-04
PLJ06	PLJ08-06
PLJ08	PLJ10-08
PLJ10	PLJ12-10
PLJ12	

PKJ Plug-in Triple

Model (ΦD)	
Tube Dia(mm)	
PKJ04	PKJ06-04
PKJ06	PKJ08-04
PKJ08	PKJ08-06
PKJ10	PKJ10-06
	PKJ10-08

PGT Double Banjo

Model (ΦD)
Tube Dia(mm) - Thread Size (R)/(G)
PGT04-01 (G)
PGT06-01 (G)
PGT06-02 (G)
PGT08-01 (G)
PGT08-02 (G)
PGT10-02 (G)

*-G为平面密封的接头。

Speed Controller

SC-(G) Male Elbow

Model (ΦD-T)			
Tube Dia(mm) - Thread Size (R)/(G)		Tube Dia(inch) - Thread Size (NPT)	
SC04-M5 (B)	SC08-04 (B) (G)	SC5/32-U10 (B)	SC5/16-N02 (B)
SC04-01 (B) (G)	SC10-01 (B) (G)	SC5/32-N01 (B)	SC5/16-N03 (B)
SC04-02 (B) (G)	SC10-02 (B) (G)	SC3/16-U10 (B)	SC5/16-N04 (B)
SC06-M5 (B)	SC10-03 (B) (G)	SC3/16-N01 (B)	SC3/8-N01 (B)
SC06-01 (B) (G)	SC10-04 (B) (G)	SC3/16-N02 (B)	SC3/8-N02 (B)
SC06-02 (B) (G)	SC12-01 (B) (G)	SC1/4-U10 (B)	SC3/8-N03 (B)
SC06-03 (B) (G)	SC12-02 (B) (G)	SC1/4-N01 (B)	SC3/8-N04 (B)
SC06-04 (B) (G)	SC12-03 (B) (G)	SC1/4-N02 (B)	SC1/2-N02 (B)
SC08-01 (B) (G)	SC12-04 (B) (G)	SC1/4-N03 (B)	SC1/2-N03 (B)
SC08-02 (B) (G)		SC1/4-N04 (B)	SC1/2-N04 (B)
SC08-03 (B) (G)		SC5/16-N01 (B)	

SS-(G) Rotatable Body

Model (ΦD-T)	
Tube Dia(mm)- Thread Size (R)/(G)	Tube Dia(inch)
SS04-01 (B) (G)	SS1/4-N01 (B)
SS04-02 (B) (G)	SS1/4-N02 (B)
SS06-01 (B) (G)	SS5/16-N01 (B)
SS06-02 (B) (G)	SS5/16-N02 (B)
SS08-01 (B) (G)	SS3/8-N02 (B)
SS08-02 (B) (G)	SS3/8-N03 (B)
SS10-02 (B) (G)	SS1/2-N02 (B)
SS10-03 (B) (G)	SS1/2-N03 (B)
SS12-02 (B) (G)	
SS12-03 (B) (G)	

SU Rotatable Body

Model (ΦD)	
Tube Dia(mm)	Tube Dia(inch)
SU04	SU5/32
SU06	SU3/16
SU08	SU1/4
SU10	SU5/16
SU12	SU3/8
	SU1/2

SCA-(G) Slot-head Flow Controller

Model (ΦD-T)		
Tube Dia(mm) - Thread Size (R)/(G)		
SCA04-M5 (B)	SCA08-01 (B) (G)	SCA12-01 (B) (G)
SCA04-01 (B) (G)	SCA08-02 (B) (G)	SCA12-02 (B) (G)
SCA06-M5 (B)	SCA08-03 (B) (G)	SCA12-03 (B) (G)
SCA06-01 (B) (G)	SCA10-01 (B) (G)	
SCA06-02 (B) (G)	SCA10-02 (B) (G)	
SCA06-03 (B) (G)	SCA10-03 (B) (G)	

Manual Valve

HVFF Tube type

Model (ΦD)
Tube Dia(mm) -Tube Dia(mm)
HVFF06-06 (B)
HVFF08-06 (B)
HVFF08-08 (B)
HVFF10-08 (B)
HVFF10-10 (B)
HVFF12-10 (B)
HVFF12-12 (B)

HVSS-(G) Thread type

Model (ΦD-T)
Tube Dia(mm) - Thread Size (R)/(G)
HVSS01-01 (B) (G)
HVSS02-01 (B) (G)
HVSS02-02 (B) (G)
HVSS03-02 (B) (G)
HVSS03-03 (B) (G)
HVSS04-03 (B) (G)
HVSS04-04 (B) (G)

HVSF-(G) From thread to tube end

Model (ΦT-D)	
Thread Size (R)/(G) - Tube Dia(mm)	
HVSF01 (G)-06 (B)	HVSF04 (G)-10 (B)
HVSF02 (G)-06 (B)	HVSF02 (G)-12 (B)
HVSF03 (G)-06 (B)	HVSF03 (G)-12 (B)
HVSF01 (G)-08 (B)	HVSF04 (G)-12 (B)
HVSF02 (G)-08 (B)	
HVSF03 (G)-08 (B)	
HVSF02 (G)-10 (B)	
HVSF03 (G)-10 (B)	

HVFS-(G) From tube to thread end

Model (ΦD-T)	
Tube Dia(mm) - Thread Size (R)/(G)	
HVFS06-01 (B) (G)	HVFS10-04 (B) (G)
HVFS06-02 (B) (G)	HVFS12-02 (B) (G)
HVFS06-03 (B) (G)	HVFS12-03 (B) (G)
HVFS08-01 (B) (G)	HVFS12-04 (B) (G)
HVFS08-02 (B) (G)	
HVFS08-03 (B) (G)	
HVFS10-02 (B) (G)	
HVFS10-03 (B) (G)	

Ball Valve

BVU Ball Valve

Model (ΦD)	
Tube Dia(mm)	
BVU06	BVU08-06
BVU08	BVU12-10
BVU10	
BVU12	

BVC-(G) Ball Valve

Model (ΦD-T)		
Tube Dia(mm) - Thread Size (R)/(G)		
BVC06-01 (G)	BVC08-02 (G)	BVC10-04 (G)
BVC06-02 (G)	BVC08-03 (G)	BVC12-02 (G)
BVC06-03 (G)	BVC10-02 (G)	BVC12-03 (G)
BVC08-01 (G)	BVC10-03 (G)	BVC12-04 (G)

*-G为平面密封的接头。

Brass Push-In Tube Fitting & Nut Lock Tube Fitting

PCT-(G) Male Straight

Model (ΦD-T)	
Tube Dia(mm) - Thread Size (R)/(G)	
PCT04-M5	PCT08-03 (G)
PCT04-01 (G)	PCT08-04 (G)
PCT04-02 (G)	PCT10-01 (G)
PCT06-M5	PCT10-02 (G)
PCT06-01 (G)	PCT10-03 (G)
PCT06-02 (G)	PCT10-04 (G)
PCT06-03 (G)	PCT12-02 (G)
PCT06-04 (G)	PCT12-03 (G)
PCT08-01 (G)	PCT12-04 (G)
PCT08-02 (G)	

PBT-(G) Male Branch Tee

Model (ΦD-T)	
Tube Dia(mm) - Thread Size (R)/(G)	
PBT04-M5	PBT08-03 (G)
PBT04-01 (G)	PBT08-04 (G)
PBT04-02 (G)	PBT10-01 (G)
PBT06-M5	PBT10-02 (G)
PBT06-01 (G)	PBT10-03 (G)
PBT06-02 (G)	PBT10-04 (G)
PBT06-03 (G)	PBT12-02 (G)
PBT06-04 (G)	PBT12-03 (G)
PBT08-01 (G)	PBT12-04 (G)
PBT08-02 (G)	

PCFT-(G) Female Straight

Model (ΦD-T)	
Tube Dia(mm) - Thread Size (R)/(G)	
PCFT04-M5	PCFT08-03 (G)
PCFT04-01 (G)	PCFT08-04 (G)
PCFT04-02 (G)	PCFT10-01 (G)
PCFT06-M5	PCFT10-02 (G)
PCFT06-01 (G)	PCFT10-03 (G)
PCFT06-02 (G)	PCFT10-04 (G)
PCFT06-03 (G)	PCFT12-02 (G)
PCFT06-04 (G)	PCFT12-03 (G)
PCFT08-01 (G)	PCFT12-04 (G)
PCFT08-02 (G)	

PDT-(G) Male Run Tee

Model (ΦD-T)	
Tube Dia(mm) - Thread Size (R)/(G)	
PDT04-M5	PDT08-03 (G)
PDT04-01 (G)	PDT08-04 (G)
PDT04-02 (G)	PDT10-01 (G)
PDT06-M5	PDT10-02 (G)
PDT06-01 (G)	PDT10-03 (G)
PDT06-02 (G)	PDT10-04 (G)
PDT06-03 (G)	PDT12-02 (G)
PDT06-04 (G)	PDT12-03 (G)
PDT08-01 (G)	PDT12-04 (G)
PDT08-02 (G)	

PLT-(G) Male Elbow

Model (ΦD-T)	
Tube Dia(mm) - Thread Size (R)/(G)	
PLT04-M5	PLT08-03 (G)
PLT04-01 (G)	PLT08-04 (G)
PLT04-02 (G)	PLT10-01 (G)
PLT06-M5	PLT10-02 (G)
PLT06-01 (G)	PLT10-03 (G)
PLT06-02 (G)	PLT10-04 (G)
PLT06-03 (G)	PLT12-02 (G)
PLT06-04 (G)	PLT12-03 (G)
PLT08-01 (G)	PLT12-04 (G)
PLT08-02 (G)	

PMFT Bulkhead Female Straight

Model (ΦD-T)	
Tube Dia(mm) - Thread Size (R)	
PMFT04-01	PMFT10-02
PMFT04-02	PMFT10-03
PMFT06-01	PMFT10-04
PMFT06-02	PMFT12-02
PMFT06-03	PMFT12-03
PMFT08-01	PMFT12-04
PMFT08-02	
PMFT08-03	
PMFT08-04	
PMFT10-01	

PUT Union Straight

Model (ΦD)	
Tube Dia(mm)	
PUT04	PUT08-06
PUT06	PUT10-08
PUT08	
PUT10	
PUT12	

PVT Union Elbow

Model (ΦD)
Tube Dia(mm)
PVT04
PVT06
PVT08
PVT10
PVT12

PET Union Tee

Model (ΦD)
Tube Dia(mm)
PET04
PET06
PET08
PET10
PET12

PGJT Plug-in Reducer

Model (ΦD)
Tube Dia(mm)
PGJT06-04
PGJT08-06
PGJT10-08
PGJT12-10

PZT Union Cross

Model (ΦD)
Tube Dia(mm)
PZT04
PZT06
PZT08
PZT10
PZT12

PMT Bulkhead Union

Model (ΦD)
Tube Dia(mm)
PMT04
PMT06
PMT08
PMT10
PMT12

PKT Union Triple Tee

Model (ΦD)
Tube Dia(mm)
PKT04
PKT06
PKT08
PKT10
PKT12

BA Female Screw Union

Model
BA-01
BA-02
BA-03
BA-04
BA-02-01
BA-03-02

BD Bush

Model
BD01-02
BD01-03
BD01-04
BD02-03
BD02-04
BD03-04

PHT-(G) Single Banjo

Model (ΦD-T)	
Tube Dia(mm) - Thread Size (R)/(G)	
PHT04-M5	PHT06-02 (G)
PHT04-01 (G)	PHT08-01 (G)
PHT04-02 (G)	PHT08-02 (G)
PHT06-M5	PHT08-03 (G)
PHT06-01 (G)	PHT10-03 (G)

*-G为平面密封的接头。

Brass Push-In Tube Fitting & Nut Lock Tube Fitting

Accessories
HAC/ HAD
HR
HAC/ D A.
Accessories

SCT-(G) Flow Controller

Model (ΦD-T)				
Tube Dia(mm) - Thread Size (R)/(G)				
SCT04-M5	SCT04-02 (G)	SCT06-01 (G)	SCT08-01 (G)	SCT08-03 (G)
SCT04-01 (G)	SCT06-M5	SCT06-02 (G)	SCT08-02 (G)	SCT10-03 (G)

BP-(G) Plug

Model	
BP-01 (G)	BP-04 (G)
BP-02 (G)	
BP-03 (G)	

BZ Plug

Model	
BZ-01	BZ-04
BZ-02	
BZ-03	

BB Union Stem

Model	
BB01-01	BB02-04
BB01-02	BB03-03
BB01-03	BB03-04
BB02-02	BB04-04
BB02-03	

BC Male Straight

Model		
BC04-01	BC08-01	BC10-04
BC04-02	BC08-02	BC12-02
BC06-01	BC08-03	BC12-03
BC06-02	BC10-02	BC12-04
BC06-03	BC10-03	

BU Union Straight

Model
BU-04
BU-06
BU-08
BU-10
BU-12

BE Union Tee

Model
BE-04
BE-06
BE-08
BE-10
BE-12

BV Union Elbow

Model
BV-04
BV-06
BV-08
BV-10
BV-12

BT Branch Tee

Model	
BT04-01	BT10-02
BT06-01	BT10-03
BT06-02	BT10-04
BT08-01	BT12-02
BT08-02	BT12-03
BT08-03	BT12-04

BF Female Straight

Model	
BF04-01	BF10-02
BF06-01	BF10-03
BF06-02	BF10-04
BF08-01	BF12-02
BF08-02	BF12-03
BF08-03	BF12-04

BL Male Elbow

Model	
BL04-01	BL10-02
BL06-01	BL10-03
BL06-02	BL10-04
BL08-01	BL12-02
BL08-02	BL12-03
BL08-03	BL12-04

KC Male Straight

Model		
KC04-01	KC08-01	KC10-03
KC04-02	KC08-02	KC10-04
KC06-01	KC08-03	KC12-02
KC06-02	KC08-04	KC12-03
KC06-03	KC10-02	KC12-04

KL Male Union Elbow

Model		
KL04-01	KL08-01	KL10-03
KL04-02	KL08-02	KL10-04
KL06-01	KL08-03	KL12-02
KL06-02	KL08-04	KL12-03
KL06-03	KL10-02	KL12-04

KLF Female Elbow

Model		
KLF04-01	KLF08-02	KLF10-04
KLF06-01	KLF08-03	KLF12-02
KLF06-02	KLF08-04	KLF12-03
KLF06-03	KLF10-02	KLF12-04
KLF08-01	KLF10-03	

KF Female Straight

Model		
KF04-01	KF08-01	KF10-03
KF04-02	KF08-02	KF10-04
KF06-01	KF08-03	KF12-02
KF06-02	KF08-04	KF12-03
KF06-03	KF10-02	KF12-04

KT Male Branch Tee

Model		
KT04-01	KT08-01	KT10-03
KT04-02	KT08-02	KT10-04
KT06-01	KT08-03	KT12-02
KT06-02	KT08-04	KT12-03
KT06-03	KT10-02	KT12-04

KST Male Run Tee

Model		
KST04-01	KST08-01	KST10-04
KST04-02	KST08-02	KST12-02
KST06-01	KST08-03	KST12-03
KST06-02	KST08-04	KST12-04
KST06-03	KST10-02	

KU Union Straight

Model	
KU-04	KU-10
KU-06	KU-12
KU-08	

KV Union Elbow

Model	
KV-04	KV-10
KV-06	KV-12
KV-08	

KE Union Tee

Model	
KE-04	KE-10
KE-06	KE-12
KE-08	

Metal Push-In Tube Fitting

CN

Model
CN8×5
CN10×6.5
CN12×8

CM

Model
CM02
CM03
CM04

HN

Model
HN8×5
HN10×6.5
HN12×8

HM

Model
HM02
HM03
HM04

CH

Model
CH8×5
CH10×6.5
CH12×8

CF

Model
CF02
CF03
CF04

HH

Model
HH8×5
HH10×6.5
HH12×8

HF

Model
HF02
HF03
HF04

Silencer

Silencer

Model	
BSL-M5	BSL-10
BSL-01	BSL-12
BSL-02	BSL-14
BSL-03	BSL-20
BSL-04	
BSL-06	

Flow Control Silencer

Model
BESL-01
BESL-02
BESL-03
BESL-04
BESL-06
BESL-10

Miniature Silencer

Model
BSLM-01
BSLM-02
BSLM-03
BSLM-04
BSLM-06
BSLM-10

Plastic Silencer

Model	
PSL-01	PAL-01
PSL-02	PAL-02
PSL-03	PAL-03
PSL-04	PAL-04

PU/Nylon/PA

PU Spiral Fitting

Code	EUC8-2	EUC8-4	EUC8-6	EUC8-8
External diameter	8	8	8	8
Length	2	4	6	8
Code	EUC10-2	EUC10-4	EUC10-6	EUC10-8
External diameter	10	10	10	10
Length	2	4	6	8

Nylon / Polyurethane / PU Tube

Code	0320	0425	0640	0850	0860	1065
External diameter	Φ3.0	Φ4.0	Φ6.0	Φ8.0	Φ8.0	Φ10.0
Bore	Φ2.0	Φ2.5	Φ4.0	Φ5.0	Φ6.0	Φ6.5
Code	1070	1280	1290	1611	1613	
External diameter	Φ10.0	Φ12.0	Φ12.0	Φ16.0	Φ16.0	
Bore	Φ7.0	Φ8.0	Φ9.0	Φ11.0	Φ13.0	

Memo

Project Management

1. Work flow

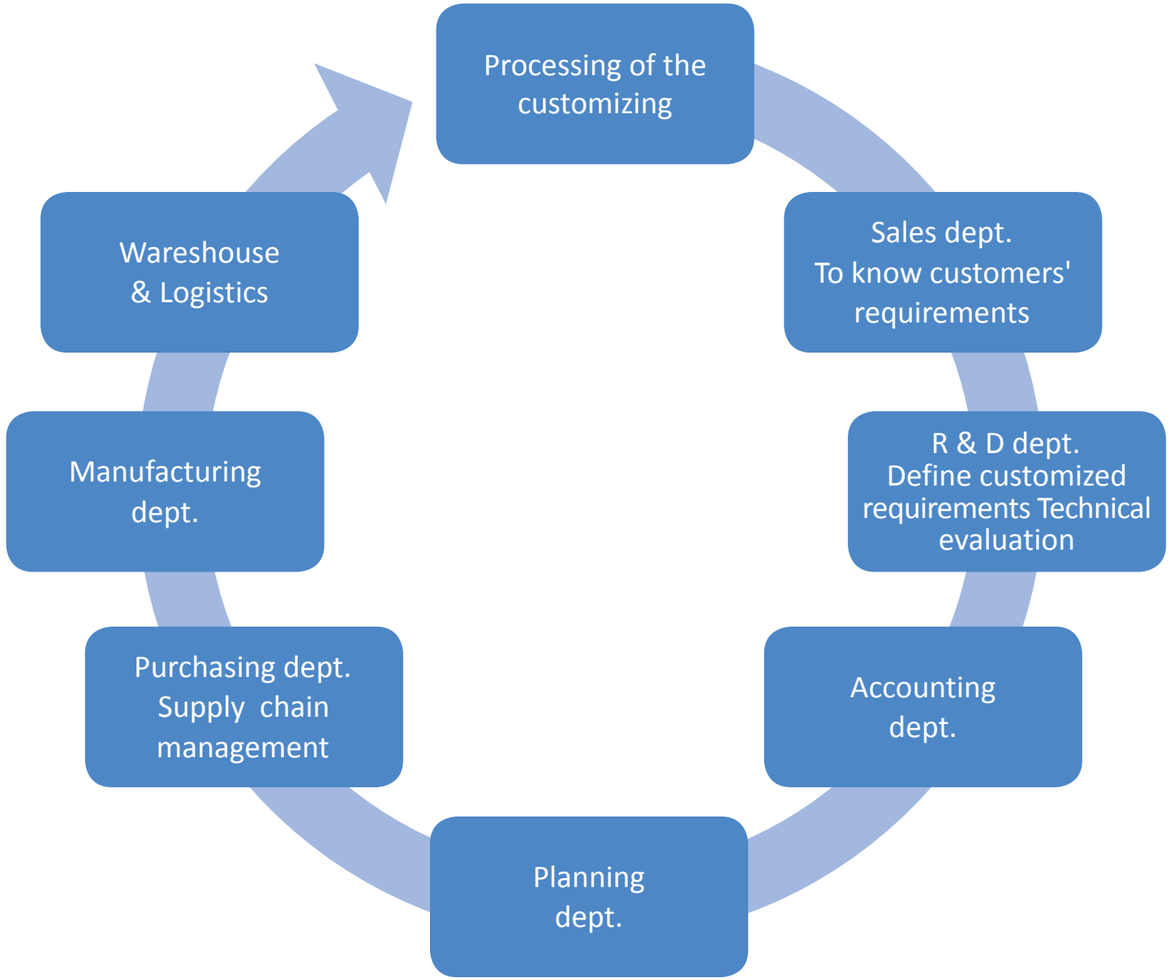

2. Functions

- To transfer the market information in front of individual end user products or solution from customers.
- To satisfy individual requirements.
- To sort quality issues.
- To provide alternative technological service, like
  A. To optimize the processing
  B. To satisfy functionality and quality
  C. To look for adapted components
- To ensure delivery availability and delivery

R&D Structure and Functions

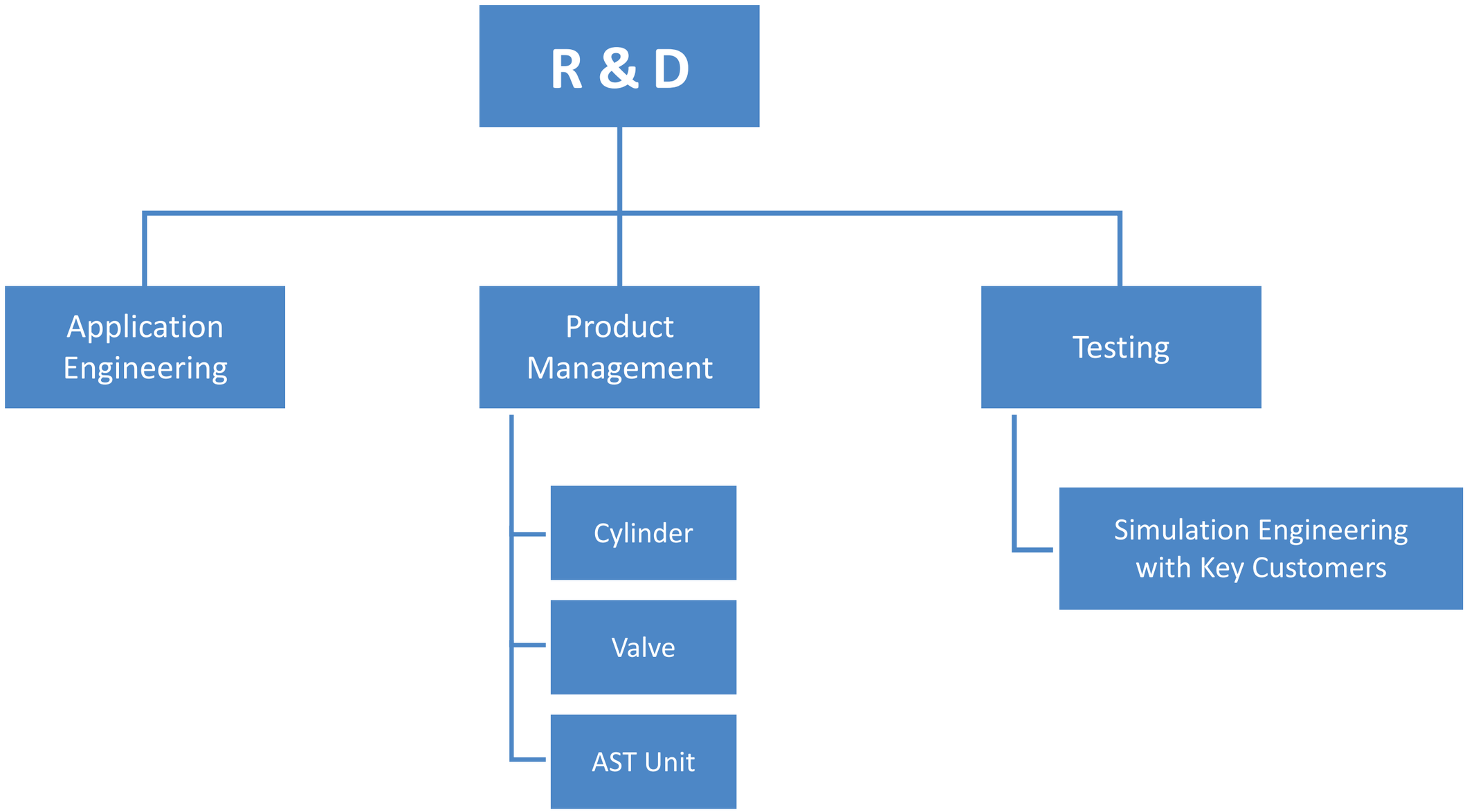

Production-Processing

Machinery

- Turning
- Drilling
- CNC
- Cleaning
- Surface treatment
- Tooling

Assembly

- Automatic assembly
- Assembly

QM

- Quality system
- 100% inspection
- Life-cycle test

Logistics

- Loading
- Shipping

Quality Control

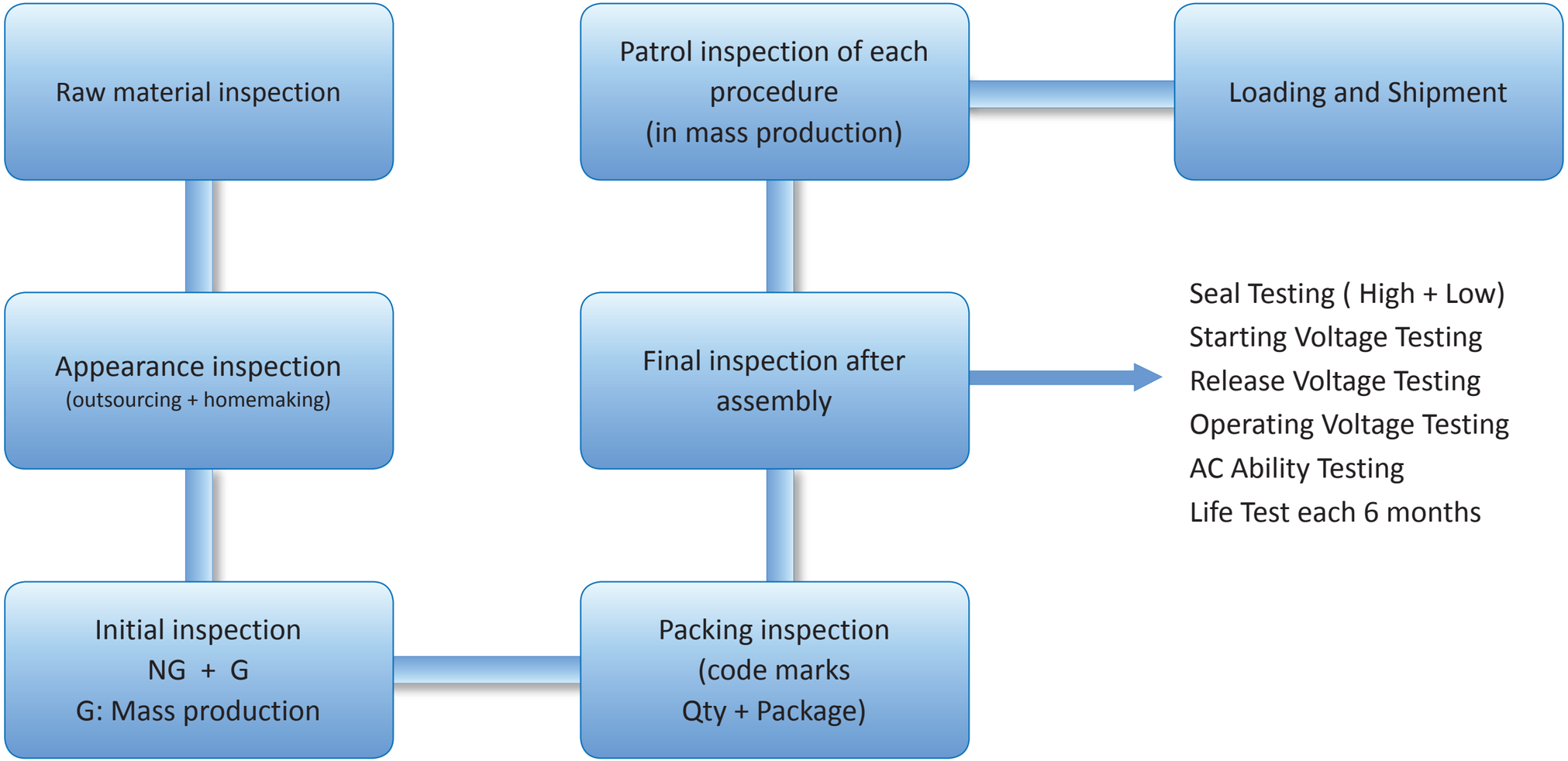

Services

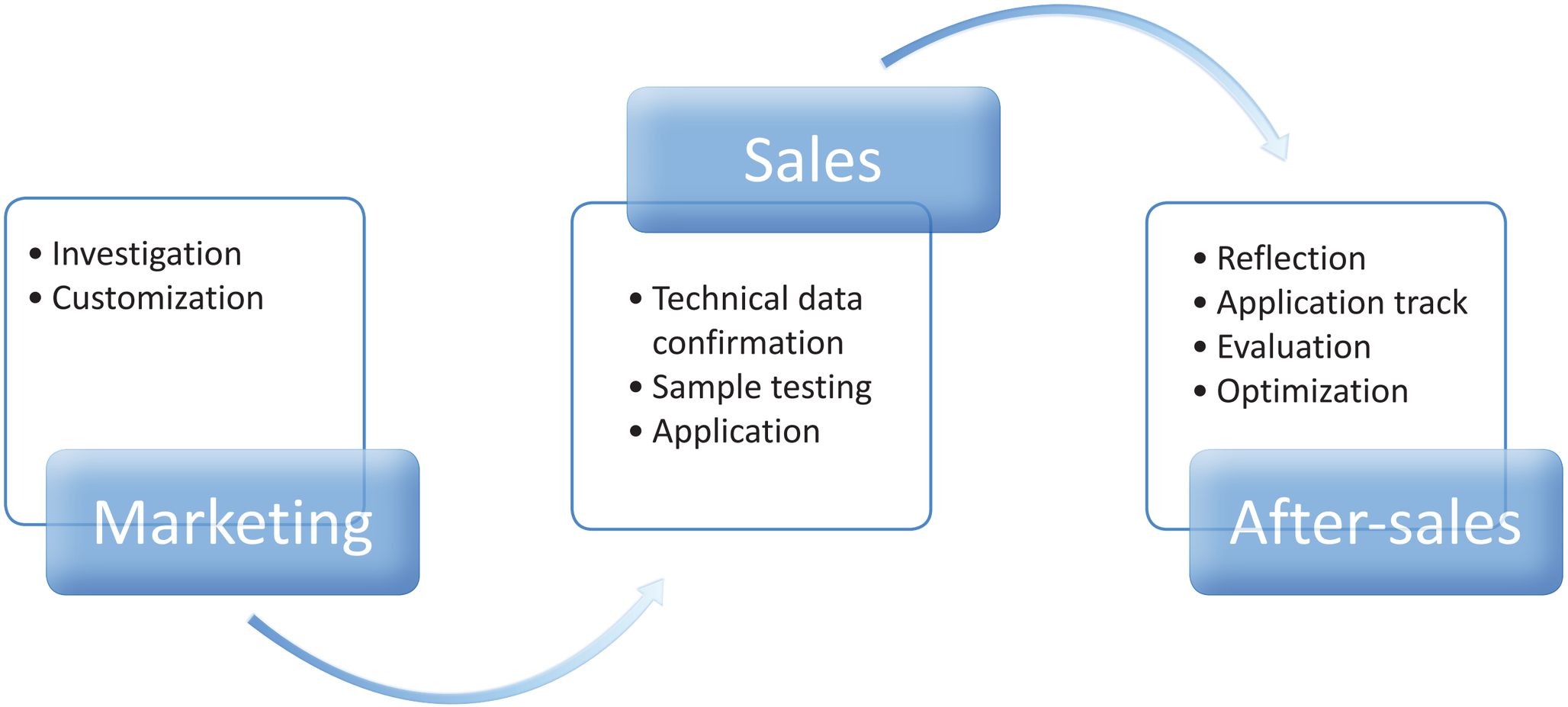
Sales
• Investigation
• Customization
Marketing
• Technical data confirmation
• Sample testing
• Application
• Reflection
• Application track
• Evaluation
• Optimization
After-sales

Warning

These products are intended for use in industrial compressed air systems only. Do not use these products where pressures and temperatures can exceed those listed under 'Technical Data'.

Before using these products with fiuids other than those specified, for non-industrial applications, life-support systems, or other applications not within published specifications, consult **JELPC**.

Through misuse, age, or malfunction, components used in fluid power systems can fail in various modes. The system designer is warned to consider the failure modes of all component parts used in fluid power systems and to provide adequate safeguards to prevent personal injury or damage to equipment in the event of such failure.

System designers must provide a warning to end users in the system instructional manual if protection against a failure mode cannot be adequately provided.

System designers and end users are cautioned to review specific warnings found in instruction sheets packed and shipped with these products.

Our policy is one of continuous research and development. We therefore reserve the right to amend without notice the specifications given in this document.